This is a digital copy of a book that was preserved for generations on library shelves before it was carefully scanned by Google as part of a project to make the world's books discoverable online.

It has survived long enough for the copyright to expire and the book to enter the public domain. A public domain book is one that was never subject to copyright or whose legal copyright term has expired. Whether a book is in the public domain may vary country to country. Public domain books are our gateways to the past, representing a wealth of history, culture and knowledge that's often difficult to discover.

Marks, notations and other marginalia present in the original volume will appear in this file - a reminder of this book's long journey from the publisher to a library and finally to you.

Usage guidelines

Google is proud to partner with libraries to digitize public domain materials and make them widely accessible. Public domain books belong to the public and we are merely their custodians. Nevertheless, this work is expensive, so in order to keep providing this resource, we have taken steps to prevent abuse by commercial parties, including placing technical restrictions on automated querying.

We also ask that you:

+ *Make non-commercial use of the files* We designed Google Book Search for use by individuals, and we request that you use these files for personal, non-commercial purposes.

+ *Refrain from automated querying* Do not send automated queries of any sort to Google's system: If you are conducting research on machine translation, optical character recognition or other areas where access to a large amount of text is helpful, please contact us. We encourage the use of public domain materials for these purposes and may be able to help.

+ *Maintain attribution* The Google "watermark" you see on each file is essential for informing people about this project and helping them find additional materials through Google Book Search. Please do not remove it.

+ *Keep it legal* Whatever your use, remember that you are responsible for ensuring that what you are doing is legal. Do not assume that just because we believe a book is in the public domain for users in the United States, that the work is also in the public domain for users in other countries. Whether a book is still in copyright varies from country to country, and we can't offer guidance on whether any specific use of any specific book is allowed. Please do not assume that a book's appearance in Google Book Search means it can be used in any manner anywhere in the world. Copyright infringement liability can be quite severe.

About Google Book Search

Google's mission is to organize the world's information and to make it universally accessible and useful. Google Book Search helps readers discover the world's books while helping authors and publishers reach new audiences. You can search through the full text of this book on the web at `http://books.google.com/`

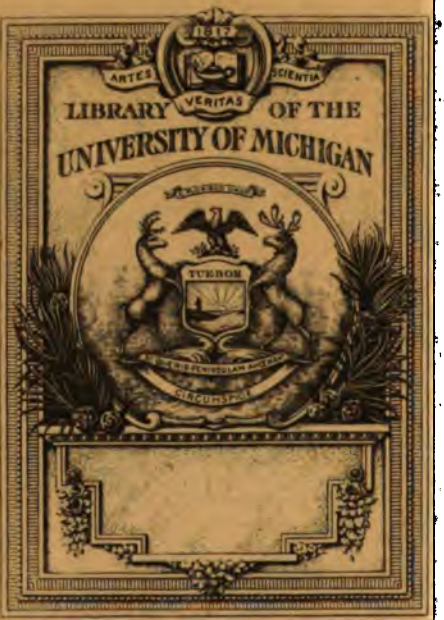
ARTES
VERITAS
SCIENTIA
LIBRARY OF THE
UNIVERSITY OF MICHIGAN
TUEBOR

FRONTISPIECE.

N. Dughin pinx. J. Baker sculp.

UNIVERSAL MAGAZINE.

VOL. XCVI.

Published by W. Bent, London 1795.

THE

UNIVERSAL MAGAZINE

OF

KNOWLEDGE AND PLEASURE;

CONTAINING

Letters	Hiſtory	Aſtronomy	Philoſophy
Debates	Biography	Geography	Medicine
Eſſays	Antiquities	Mathematics	Chemiſtry
Tales	Voyages	Mechanics	Huſbandry
Poetry	Travels	Architecture	Gardening

AND OTHER

Arts and Sciences;

Which may render it

Inſtructive and Entertaining.

To which occaſionally will be added

An Impartial Account of Books in ſeveral Languages,

And of the STATE of LEARNING in Europe;

ALSO

Of the NEW THEATRICAL ENTERTAINMENTS.

VOL. XCVI.

LONDON:

Published under His Majeſty's Royal Licence,

By W. BENT, at the KING'S ARMS, PATERNOSTER ROW.

MDCCXCV.

Compl. sets
Cleve
2-2-37
33571

PREFACE.

THE events which have long agitated all Europe appear to have been increaſing, every year, in awful importance. Habituated, in this country, to connect the endearing idea of liberty with that of ſocial happineſs, we ſurvey the ſcenes, exhibited in a neighbouring country, with aſtoniſhment and horror. We have ſeen a civilized and philoſophical people zealous to deſtroy, not only the popular ſuperſtition, but even every idea of religion; and yet, with an unaccountable infatuation, madly ruſhing to an oppoſite extreme, and reviving the long-exploded abſurdities of paganiſm. Inveſting Liberty with the character of a goddeſs, they have profaned her altars with the blood of her votaries; her officiating miniſters exerciſing, under the name of a revolutionary government, the moſt terrible deſpotiſm. Suſpicion and deſtruction we have ſeen to be ſynonymous terms; the life of every man in the power of an informer; and to be accuſed, impriſoned, and executed, events of courſe, with ſcarce the interval of a moment. Yet, amid all the horrors of a ſtate, ſo emphatically called 'the ſyſtem of terror,' this nation has diſplayed unexpected energy and reſources; not only ſucceſsfully reſiſting the combined efforts of the moſt formidable powers, but over-running entire countries with her invincible armies. The politician, contemplating ſuch a change in the ſyſtem of Europe, relies no longer on the experience of ages, but is loſt in the uncertainty of conjecture: he dreads the propagation of principles, which he thinks ſubverſive of all the ſanctions of religion and law, and of all the relations and pleaſures of ſocial intercourſe; while, on the other hand, there are not wanting thoſe, who, accuſtomed to conſider all events as under the guidance of an over-ruling Providence, are perſuaded, that even thoſe which now ſeem the moſt gloomy and inauſpicious, may ultimately tend to promote, in the higheſt degree, the knowledge, virtue, and felicity of mankind.

In the eaſtern part of Europe, events have happened, of which virtuous and reflecting minds have entertained more united ſentiments. They have beheld, with indignation, a once powerful and independent nation deprived of ſome of her fineſt provinces, by the ruthleſs hand of violence; a foreign deſpot deſtroying a conſtitution, not dictated by the madneſs of a moment or of a faction, but which the paternal ſovereign and his people were unanimous in forming, with a rational attention to their own welfare, and the moſt benevolent views to the happineſs of poſterity. The formation of this conſtitution they have

ſeen to be the ſignal for a ſecond diſmemberment of the country; a glorious inſurrection, intended to reſtore the nation to its ancient independence, ſubdued with circumſtances of cruelty, characteriſtic of the moſt barbarous nations; while the Coloſſal Power of Oppreſſion, perhaps, is preparing to pronounce the ſentence of utter political extinction.

We return, for happier proſpects, to our own natal ſoil. We wait, with anxious expectation, the approach of 'the Royal Virgin,' and invoke 'the auſpicious gales' to waft her, in ſafety, to theſe happy ſhores; perſuaded that every circumſtance that can augment the domeſtic felicity of a beloved ſovereign will accord with the fondeſt wiſhes of expecting thouſands. She will behold a country where loyalty and liberty are united; and where a conſtitution, in ſome points theoretically defective, has been found practically productive of national proſperity. With this pleaſing theme, however, the recollection of the calamities of war, though yet remote from our native land, will ſtill recur; and we cannot but exclaim with the courtly Laureat:

'O that amid the nuptial flowers we twine
'Our hands the Olive's ſober leaves might join;
'Her preſence teach the ſtorm of war to ceaſe,
'Diſarm the battle's rage, and charm the world to peace.'

In the mean time, in the conduct of this Miſcellany, we ſhall continue indefatigable in exploring the moſt pleaſing ſources of inſtruction and amuſement, and by a ſeries of ingenious Original Eſſays, a judicious Selection of Miſcellaneous Literature, and an impartial Hiſtory of the Times, endeavour to merit the diſtinction to which we conſtantly aſpire, of being the Repoſitory of whatever may contribute to diffuſe uſeful Knowledge, or be productive of real, ennobling, and permanent Pleaſure.

January 1, 1795.

THE UNIVERSAL MAGAZINE OF KNOWLEDGE AND PLEASURE, FOR JANUARY, 1795.

VOL. XCVI.

The CHOICE *of* HERCULES; *a celebrated* ALLEGORY: *Illuſtrative of the* FRONTISPIECE.

Now had the ſon of Jove mature attain'd
The joyful prime: when youth, elate and gay,
Steps into life, and follows unreſtrain'd
Where paſſion leads, or prudence points the way.
In the pure mind, at thoſe ambiguous years,
Or vice, rank weed, firſt ſtrikes her pois'nous root;
Or haply virtue's op'ning bud appears
By juſt degrees; fair bloom, of faireſt fruit:
Summer ſhall ripen what the ſpring began;
Youth's generous fires will glow more conſtant in the man.

LOWTH.

WHEN Hercules was in that part of his youth, in which it was natural for him to conſider what courſe of life he ought to purſue, he one day retired into a deſert, where the ſilence and ſolitude of the place favoured his meditations. As he was muſing on his preſent condition, and very much perplexed in himſelf on the ſtate of life he ſhould chooſe, he ſaw two women of a larger ſtature than ordinary approaching toward him. One of them had a very noble air, and graceful deportment: her beauty was natural and eaſy, her perſon clean and unſpotted, her eyes caſt toward the ground with an agreeable reſerve, her motion and behaviour full of modeſty, and her raiment as white as ſnow. The other had a great deal

of health and floridneſs in her countenance, which ſhe had helped with an artificial white and red; and endeavoured to appear more graceful than ordinary in her mien, by a mixture of affectation in all her geſtures. She had a wonderful confidence and aſſurance in her looks, and all the variety of colours in her dreſs that ſhe thought were the moſt proper to ſhew her complexion to advantage. She caſt her eyes upon herſelf, then turned them on thoſe that were preſent, to ſee how they liked her, and often looked on the figure ſhe made in her own ſhadow. Upon her nearer approach to Hercules, ſhe ſtepped before the other lady, who came forward with a regular compoſed carriage, and running up to him, accoſted him after the following manner:

My dear Hercules, ſays ſhe, I find you are very much divided in your own thoughts upon the way of life that you ought to chooſe: be my friend, and follow me; I will lead you into the poſſeſſion of pleaſure, and out of the reach of pain, and remove you from all the noiſe and diſquietude of buſineſs. The affairs of either war or peace ſhall have no power to diſturb you. Your whole employment ſhall be to make your life eaſy, and to entertain every ſenſe with its proper gratifications. Sumptuous tables, beds of roſes, clouds of perfumes, concerts of muſic, crowds of beauties, are all in readineſs to receive you. Come along with me into this region of delights, this world of pleaſure, and bid farewell for ever to care, to pain, to buſineſs——

Hercules hearing the lady talk after this manner, deſired to know her name: to which ſhe anſwered, My friends, and thoſe who are well acquainted with me, call me Happineſs; but my enemies, and thoſe who would injure my reputation, have given me the name of Pleaſure.

By this time the other lady was come up, who addreſſed herſelf to the young hero in a very different manner:

Hercules, ſays ſhe, I offer myſelf to you, becauſe I know you are deſcended from the gods, and give proofs of that deſcent by your love of virtue, and application to the ſtudies proper for your age. This makes me hope you will gain both for yourſelf and me an immortal reputation. But, before I invite you into my ſociety and friendſhip, I will be open and ſincere with you, and muſt lay down this as an eſtabliſhed truth, that there is nothing truly valuable which can be purchaſed without pains and labour. The gods have ſet a price upon every real and noble pleaſure. If you would gain the favour of the Deity, you muſt be at the pains of worſhipping him; if the friendſhip of good men, you muſt ſtudy to oblige them; if you would be honoured by your country, you muſt take care to ſerve it. In ſhort, if you would be eminent in war or peace, you muſt become maſter of all the qualifications that can make you ſo. Theſe are the only terms and conditions upon which I can propoſe happineſs.

The goddeſs of Pleaſure here broke in upon her diſcourſe: You ſee, Hercules, ſaid ſhe, that, by her own confeſſion, the way to her pleaſure is long and difficult, whereas that which I propoſe is ſhort and eaſy.

Alas! ſaid the other lady, whoſe viſage glowed with a paſſion, made up of ſcorn and pity, what are the pleaſures you propoſe? To eat before you are hungry, drink before you are thirſty, ſleep before you are tired, to gratify appetites before they are raiſed, and raiſe ſuch appetites as Nature never planted. You never heard the moſt delicious muſic, which is the praiſe of one's ſelf; nor ſaw the moſt beautiful object, which is the work of one's own hands. Your votaries paſs away their youth in a dream of miſtaken pleaſures, while they are heaping up anguiſh, torment, and remorſe, for old age.

Vaſt happineſs enjoy thy gay allies!
A youth of follies, an old age of cares!
Young, yet enervate; old, yet never wiſe,
Vice waſtes their vigour, and their mind impairs.
Vain, idle, delicate, in thoughtleſs eaſe,
Reſerving woes for age, their prime they ſpend;
All wretched, hopeleſs, in the evil days
With ſorrow to the verge of life they tend.
Griev'd with the preſent, of the paſt aſham'd,
They live, and are deſpis'd; they die, nor more are nam'd.

LOWTH.

As for me, I am the friend of the gods and of good men, an agreeable companion to the artiſan, an houſhold guardian to the fathers of families, a patron and protector of ſervants, an aſſociate in all true and generous friendſhips. The banquets of my votaries are never coſtly, but always delicious; for none eat or drink at them who are not invited by hunger and thirſt. Their ſlumbers are ſound, and their wakings cheerful. My young men have the pleaſure of hearing themſelves praiſed by thoſe who are in years; and thoſe who are in years, of being honoured by thoſe who are young. In a word, my followers are favoured by the gods, beloved by their acquaintance, eſteemed by their country, and, after the cloſe of their labours, honoured by poſterity.

Her words breathe fire celeſtial, and impart
New vigour to his ſoul, that ſudden caught
The generous flame. With great intent his heart
Swells full, and labours with exalted thought.
The miſt of error from his eyes diſpell'd,
Though all her fraudful arts, in cleareſt light,
Sloth in her native form he now beheld:
Unveil'd, ſhe ſtood confeſt before his ſight;
Falſe ſiren! all her vaunted charms, that ſhone
So freſh erewhile and fair—now wither'd, pale, and gone!
No more the roſy bloom, in ſweet diſguiſe,
Maſks her diſſembled looks. Each borrow'd grace
Leaves her wan cheek, pale ſickneſs clouds her eyes
Livid and ſunk; and paſſions dim her face.
As when fair Iris has awhile diſplay'd
Her watry arch, with gaudy painture gay;
While yet we gaze, the glorious colours fade,
And from our wonder gently ſteal away:
Where ſhone the beauteous phantom erſt ſo bright,
Now low'rs the low-hung cloud, all gloomy to the ſight.

But Virtue more engaging all the while
Diſclos'd new charms; more lovely, more ſerene;
Beaming ſweet influence. A milder ſmile
Soften'd the terrors of her lofty mien.
Lead, goddeſs, I am thine! (tranſported cry'd
Alcides) O propitious pow'r, thy way
Teach me; poſſeſs my ſoul; be thou my guide:
From thee, O never, never let me ſtray!
While ardent thus the youth his vows addreſt,
With all the goddeſs fill'd, already glow'd his breaſt.

The heav'nly maid with ſtrength divine endued
His daring ſoul. There all her pow'rs combin'd:
Firm conſtancy, undaunted fortitude,
Enduring patience, arm'd his mighty mind.
Unmov'd in toils, in dangers undiſmay'd,
By many a hardy deed and bold emprize,
From fierceſt monſters, through her pow'rful aid,
He freed the earth: through her he gain'd the ſkies.
'Twas Virtue placed him in the bleſt abodes,
Crown'd with eternal youth; a god, among the gods.

LOWTH.

The HISTORY *of* KNOWLEDGE, LEARNING, *and* TASTE, *in* Great Britain, *during the Reign of King* JAMES *the First. Part the First* *.

[From the New Annual Regiſter for the Year 1793.]

IN the preſent department of our work, we originally propoſed to give only a conciſe view of the progreſſive ſtate of Knowledge, Learning, and Taſte, in Great Britain; and to this plan we have generally adhered. However, in the account of queen Eliſabeth's reign, we thought it eligible to be much more copious than we had been in the illuſtration of former periods. To this we were led both by the riſing importance of our materials, and by our having arrived to that interval which diſtinguiſhingly ſeparated the dark from the enlightened parts of our literary hiſtory. So much was then done; and it had ſuch an aſpect on future times, that it demanded a minuter diſcuſſion than had heretofore been adopted. As we proceed forward in our undertaking, the literature of our country becomes gradually ſtill more various and extenſive; indeed ſo various and extenſive, that were we greatly to enlarge on each branch of ſcience, and eſpecially to characterize every particular ſcholar that made ſome figure in his day, we ſhould be carried to an undue length. We muſt, therefore, ſo far confine our views to general objects, as to leave many individual names to be ſought for in the more particular details of biography.

In deſcribing the knowledge of king James the firſt's reign, we ſhall begin, as uſual, with theology. As to the doctrinal part of theology, it ſtood, among Proteſtant divines, for a number of years, pretty much as it had been in the time of queen Eliſabeth. In 1595, archbiſhop Whitgift, in conjunction with Richard Bancroft, biſhop of London, Richard Vaughan, biſhop elect of Bangor, Humphrey Tyndall, dean of Ely, doctor Whitaker, queen's profeſſor in Cambridge, and others, framed a ſet of articles, which went by the name of the Lambeth Articles. Theſe were in a high ſtrain of Calviniſm; and, though not enforced by legal authority, expreſſed the prevailing ſentiments of the age. The bare reading of them, at preſent, would afford a ſufficient conviction of their narrowneſs and abſurdity; but they were then received by the great body, both of the clergy and laity, without any degree of heſitation. Epiſcopalians and puritans alike concurred in admitting the rigid tenets of John Calvin, or, perhaps to ſpeak more properly, of St. Auguſtine. It was with regard to the diſcipline and ceremonies of the church that they differed; and theſe points were conteſted with vehemence. There was no ſmall agitation of mind among the contending parties at the commencement of a new reign. The puritans flattered themſelves with ſome indulgence from the preſbyterian education of king James. But, in fact, there could be little reaſonable ground for hope on this account. The rough and ill-mannered divines of Scotland were ſo far from having left any impreſſions in their favour, that the monarch only recollected them with diſguſt. Their ferocious behaviour had excited in him a rooted averſion to the ſcheme of worſhip they had embraced. The Roman catholics, alſo, were not without an expectation that they would be treated with leſs rigour than in the preceding reign. This, they preſumed, might be hoped for, from the affection which the king entertained for the memory of his mother. But, however willing he might be in himſelf to remit any of the ſeverities againſt the papiſts, the time was not

* See our Magazine for November 1793, page 336.

yet arrived in which he could with ſafety give way to ſuch a diſpoſition. It was James' apparent intereſt to ſupport the eſtabliſhed church; and his determination in this reſpect was ſpeedily diſplayed. Before he quitted Scotland, when doctor Thomas Nevill, dean of Canterbury, had been ſent by archbiſhop Whitgift, in the name of the biſhops and clergy of England, to tender their bounden duties to his majeſty, and to underſtand his royal pleaſure for the ordering and guiding of eccleſiaſtical cauſes, the dean brought back to his employers a welcome anſwer, which was, to uphold and maintain the government of the late queen, as ſhe left it ſettled.

The perſons, however, who were diſſatisfied with the conſtitution and forms of the eſtabliſhed religion, were too numerous, and of too much conſequence, not to be entitled to a ſolemn hearing. A conference, therefore, was appointed at Hampton-court, in which eight biſhops and five deans appeared in defence of conformity, in oppoſition to four puritan divines. From the unequal numbers and rank of the combatants, the iſſue of the conteſt might eaſily have been predicted. The moſt conſpicuous object in the debate was the king himſelf, who had now a glorious opportunity of diſplaying to his admiring ſubjects the extent of his theological knowledge. Of this he was not a little proud; and his vanity was fully gratified in the applauſes which he received. Biſhop Bancroft fell upon his knees, and ſaid, 'I proteſt my heart melteth for joy, that Almighty God, of his ſingular mercy, has given us ſuch a king, as ſince Chriſt's time has not been.' Chancellor Egerton obſerved, 'that he had never ſeen the king and prieſt ſo fully united in one perſon;' and archbiſhop Whitgift was ſo tranſported with James' teſtimony to the wiſdom of the oath ex officio, that he cried out, 'Undoubtedly your majeſty ſpeaks by the ſpecial aſſiſtance of God's ſpirit. Againſt ſuch a combination what figure could the four puritan miniſters expect to make? —Indeed, ſeveral of the points they inſiſted upon were comparatively trifling, and will be deemed of little conſequence by the more enlightened diſſenters of the preſent day. In fact, the controverſialiſts on both ſides had no title to the praiſe of poſſeſſing a liberality of mind. They had a conſiderable portion of ſcholaſtic learning; but their literature was not of that ſpecies which enlarges the underſtanding, and riſes ſuperior to prejudice and bigotry. The conference ended with alterations ſo inſignificant, and with ſuch a pertinacious refuſal of indulgences which might eaſily have been granted, that the puritans were greatly diſſatisfied, and rendered, of courſe, moſt hoſtile to the church than ever.

In one reſpect the Hampton-court conference was of peculiar importance; for it paved the way for a new tranſlation of the bible. Such a tranſlation was pleaded for by the puritan divines, and eſpecially by doctor Raynolds, the moſt celebrated of the four commiſſioners; and the king acceded to the demand. This is a matter of ſuch conſequence in the theological literature of our country, that, in treating upon it, we ſhall beg leave to depart from our accuſtomed brevity: and that we may do fuller juſtice to the ſubject, we ſhall look back to the verſions of the ſcriptures which were made in preceding periods, having no more than ſlightly and incidentally touched upon them in the former volumes of our work.

Some attempts at rendering the ſacred writings into our native tongue took place in very early times. About the year 709, Adelme, biſhop of Sherborne, is ſaid to have tranſlated the Pſalms into Saxon; and nearly about the ſame time, a verſion of the four Goſpels, into the ſame language, is underſtood to have been executed by Egbert, biſhop of Landesfern. According to ſome writers, a tranſlation of the whole Bible was made, within a few years of this period, by

the venerable Bede. But of this fact there is much reaſon to doubt. No ſatisfactory evidence of ſuch a tranſlation appears in the beſt accounts of his life, and the moſt accurate catalogues of his works. Equally doubtful is the truth of Fuller's aſſertion, that Bede tranſlated the Pſalms and New Teſtament into Engliſh. He wrote, indeed, many commentaries upon the ſcriptures, which were chiefly collections from the ancient Fathers; but there is no direct evidence of his having done more than the making of a verſion of the Goſpel of St. John into the Saxon language, for the benefit of the church. This was one of the laſt employments of his life. A Saxon tranſlation of the Pentateuch, Joſhua, parts of the Books of Kings, Eſther, Judith, and the Maccabees, is alſo attributed to Elfric, or Elfred, or Aluricius, who was archbiſhop of Canterbury from the year 993 to 1006. Whether the narrative be ſtrictly exact, is not of material conſequence in this place to enquire. There were ſeveral other attempts of the ſame kind before the time of Wickliff; but they extended only to ſome parts of the Sacred Writings. Nor do any of theſe verſions appear to have been publiſhed; having been made only for the uſe of the reſpective tranſlators, or of the particular churches to which they belonged.

The firſt perſon who appears upon undoubted evidence to have tranſlated the whole Bible was the famous John Wickliff. This work was finiſhed and publiſhed by him ſometime before the year 1381. The tranſlation was made from the Latin bibles then in common uſe, or which were uſually read in the church; for though he was ſenſible of the preference that was due to the authority of the Greek and Hebrew text, he was not ſufficiently acquainted with theſe languages to make them the foundation of his verſion. Notwithſtanding this diſadvantage, Wickliff's tranſlation was a production of great importance and utility, having been a conſiderable ſtep in that reformation in religion which was begun by him, and which paved the way for the more eminent alterations that afterward took place. An Engliſh verſion of the Bible has been attributed to John Treviſa, a native of Cornwall, and vicar of Berkley in Glouceſterſhire, and is ſaid to have been executed in 1397. The fact, however, is, that he tranſlated only a few texts, which were either painted on the walls of his patron's chapel in Berkley-caſtle, or are ſcattered in ſundry parts of his works. The ſucceſs which Wickliff met with, gave encouragement to ſome of his followers to review his tranſlation, or rather to make another, leſs ſtrict and verbal, and more agreeable to the ſenſe. In Wickliff's original undertaking he did not act without proper aſſiſtants, and the pains they took were very laudable, and indeed judicious.

The next tranſlation, which is of ſufficient conſequence to be here particularly mentioned, was that by Tindall. It included the whole New Teſtament, and was finiſhed at Antwerp, where, or at Hamburgh, it was publiſhed in the year 1526. Such was the offence taken at it by archbiſhop Warham and biſhop Tonſtall, that they hurled furious cenſures againſt the tranſlator and his adherents; and the latter of theſe prelates purchaſed far the greater part of the impreſſion, to prevent its diſperſion among the maſs of the people. This circumſtance was of ſingular advantage to the work; for Tindall was enabled, by the ſale of his book, to give more correct editions of it to the public. Not content with opening the treaſures of the New Teſtament to the Chriſtan world, he formed the deſign of adding to it a verſion of the Old Teſtament. This deſign he did not live to complete. The Pentateuch was tranſlated by him, and printed at Hamburgh in 1530; and in the next year he publiſhed an Engliſh verſion of the prophet Jonah. It has been ſuppoſed that, previouſly to

his decease, he finished all the Bible, excepting the Apocrypha, which was translated by Rogers. But it appears most probable that he translated only the historical parts. That Tindall's version has many faults, will be acknowledged by every one who is conversant with the subject: nevertheless, it was a great effort for a single man, especially considering the period in which he lived. An author who cannot be expected to be partial to him, but whose liberality of mind rises above all prejudices and distinctions (we mean doctor Geddes) thinks that 'though Tindall's is far from being a perfect translation, yet few first translations will be found preferable to it. It is astonishing,' adds the doctor, 'how little obsolete the language of it is, even at this day: and in point of perspicuity and noble simplicity, propriety of idiom and purity of style, no English version has yet surpassed it.' Doctor Geddes has farther declared, that, if he had been inclined to make any prior English version the ground-work of his own, it would certainly have been Tindall's. and that perhaps he should have done this, if their Hebrew text had been the same. Such a testimony to the merit of Tindall places him high in the rank of biblical literature.

In consequence of the gradual prevalence of Protestant principles, a rising solicitude appeared for the diffusion of the Bible in the mother tongue. Archbishop Cranmer was particularly zealous in this respect; and accordingly, notwithstanding the opposition of Gardiner and his party, he obtained, through the influence of queen Anne Bullen, an order from the king, for a new translation of the scriptures. This was in 1534; and in the next year the whole Bible was finished at the press. From the rapidity with which the work was executed, it is evident that Cranmer and his associates must have had it in previous preparation. The chief burden of the undertaking lay upon Miles Coverdale, a divine whom we have formerly characterised in his proper place, and from whom this version was called 'Coverdale's Bible.' It is also often called Cranmer's Bible; and it is the first English Bible that was allowed by royal authority, and the first translation of the whole sacred writings that was printed in our language. Archbishop Cranmer did not rest in what he had already done. His mind was so intent on introducing a free use of the scriptures by able and faithful translators, that he divided an old English translation of the New Testament into nine or ten parts, and caused these parts to be transcribed into paper books, which he distributed among the most learned bishops, and others; requiring that they would perfectly correct their respective portions, and return them to him at a limited time. When the day came, the only person who did not send in his proper part to Lambeth, was Stokesley bishop of London. What was the result of this undertaking is not ascertained.

Thomas, lord Cromwell, concurred with Cranmer in promoting the reading and study of the scriptures. In some injunctions which were published by him, as the king's vicar-general and vicegerent in ecclesiastical matters, it was ordered, 'that every parson, or proprietary of any parish-church within the realm, should provide a book of the whole Bible, both in Latin and also in English, and lay it in the choir, for every man that wished to look and read therein: and should discourage no man from reading any part of the Bible, either in Latin or English.' Such a permission could not fail of tending to produce a great revolution in the minds of our countrymen.

In the year 1537, another edition of the English Bible made its appearance, which had been printed at Hamburgh, or Marpurg, by Grafton and Whitchurch. It bore the name of Thomas Matthewe, and was set forth with the king's licence. In this edition great use was made of Tindall

and Coverdale; and the New Teſtament was Tindall's verſion. In fact the whole tranſlation is repreſented to be no other than that of Tindall and Coverdale, ſomewhat altered. That the name of Matthewe was a feigned one is univerſally allowed, and that it was aſſumed for prudential reaſons; one of which was, that the reader's obligation to Tindall might be concealed, his memory being ſtill odious to a great number of perſons. John Rogers, before mentioned, a learned academic, and the firſt who was condemned to the flames in the reign of queen Mary, is underſtood to have been employed by Cranmer in ſuperintending the edition, and in furniſhing the few emendations and additions which were thought neceſſary. At the interceſſion of the archbiſhop, lord Cromwell again exerted his influence with Henry the eighth, and his vicarial authority in recommending the Bible to public notice: and ſo well pleaſed was our worthy prelate with his lordſhip's effectual interpoſition, that he expreſſed himſelf in the following terms of pious gratitude and affection: 'I doubt not but that hereby ſuch fruit of good knowledge ſhall enſue, that it ſhall well appear hereafter what high and excellent ſervice you have done unto God and the king: which ſhall ſo much redound to your honour, that, beſide God's reward, you ſhall obtain perpetual memory for the fame within this realm.—This deed you ſhall hear of at the great day, when all things ſhall be opened and made manifeſt.'

In 1538, a quarto New Teſtament, in the Vulgate Latin, and in Coverdale's Engliſh, was printed with the king's licence. Theſe repeated attempts to enlighten the body of the people with the knowledge of the ſcriptures could not fail to excite great jealouſy in the adherents to popery. There was nothing which they dreaded ſo much as vernacular tranſlations of the Bible. At the requeſt of king Henry himſelf, Grafton had obtained a permiſſion from Francis the firſt to print a bible at Paris, on account of the ſuperior ſkill of the workmen, and the comparative goodneſs and cheapneſs of the paper. But, notwithſtanding the royal licence, the inquiſition interpoſed to prevent the execution of the deſign. The French printers, their Engliſh employers, and Coverdale the corrector of the work, were ſummoned to appear before the inquiſitors; and the impreſſion, conſiſting of 2500 copies, was ſeized and condemned to the flames. In conſequence, however, of the avarice of the officer who ſuperintended the burning of the books, ſome cheſts of them were ſold to a haberdaſher, for the purpoſe of wrapping his wares. When the alarm ſubſided, the Engliſh proprietors, who had fled from Paris, returned to that city, and not only recovered ſome of the copies which had eſcaped the fire, but brought with them to London the preſſes, types, and printers. This tranſlation took place in the latter end of the year 1538. Early in 1539, Grafton and Whitchurch printed the Bible in large folio, and prefixed to it a beautiful frontiſpiece deſigned by Hans Holbein. In the text, thoſe parts of the Latin verſion which are not found in the Hebrew or Greek are inſerted in a ſmaller letter; and a mark is uſed to denote a difference of reading between the Hebrews and the Chaldees. Matthewe's Bible was reviſed, and ſeveral alterations were made in the tranſlation, particularly in the book of Pſalms; but the prologues and notes of the edition of 1537 were wholly omitted. This third edition of the ſcriptures has been called the 'Bible in the large or great volume,' and has been ſuppoſed to be the ſame which Grafton obtained leave to print at Paris. If it was a different impreſſion, it was ſtill under the chief care of Miles Coverdale, who compared the tranſlation with the original Hebrew, and improved it in many places.

In the courſe of the ſame year, another Bible was printed by John

Byddell; and the conductor of it was Richard Taverner, who had received his education at Chriſtchurch in Oxford, and was patroniſed by Cromwell, when ſecretary of ſtate. It was probably on account of Taverner's great ſkill in the Greek language that he was encouraged by his patron to undertake this work, which is neither a bare reviſal of the Engliſh Bible juſt deſcribed, nor a new verſion, but between both. Many of the marginal notes of Matthewe's impreſſion are adopted, many omitted, and others inſerted. Taverner, in his dedication to the king, expreſſes a proper ſenſe of the difficulty of a good tranſlation of the ſcriptures. Such a tranſlation, he thinks, could ſcarcely be accompliſhed by one or two perſons; and that it would require the deep conferring of many learned wits together, and a full proportion of time and leiſure. After Cromwell's death, the influence of the biſhops, who were addicted to the Romiſh religion, procured Taverner's impriſonment in the Tower upon account of this work; but he had the addreſs to reinſtate himſelf in the king's favour, and his verſion was read in churches by royal authority.

Several privileged editions of the Bible rapidly ſucceeded; no leſs than five having appeared in 1540. In the ſame year, the curates and pariſhioners of every pariſh were required, by royal proclamation, to provide themſelves with the Bible of the largeſt volume; and to the neglect of doing it a penalty was annexed. All ordinaries were, at the ſame time, charged to ſee that the proclamation was obeyed. In 1541, a new edition of Cranmer's Bible was finiſhed by Grafton; and this was followed, in a few months, by an impreſſion of another Bible of the largeſt ſize, which was ſuperintended, at the king's command, by Tonſtal biſhop of Durham, and Heath biſhop of Rocheſter.

This edition was followed by a farther decree from Henry, that a Bible ſhould be ſet up in every pariſh throughout England. But notwithſtanding theſe injunctions were ſo frequently repeated, they were partially and reluctantly obſerved. The matter was diſcouraged by thoſe biſhops who were attached to popery, and whoſe power and influence gradually gained ſtrength, after the execution of Thomas Cromwell, earl of Eſſex. In him the venerable Cranmer loſt a zealous and able ſupporter. The prelates, who were hoſtile to their metropolitan's laudable exertions, repreſented to the king, that the Engliſh tranſlation was very erroneous and heretical. Agreeably to the language which is ſo congenial to all thoſe who are averſe to every ſpecies and degree of reform, it was ſaid, that the free uſe of the Bible was calculated to increaſe faction and parties, to raiſe diſputes among the common people, and to deſtroy the peace of the kingdom. In the convocation, which met in 1542, the archbiſhop, in the king's name, required the biſhops and clergy to reviſe the tranſlation of the New Teſtament. For this purpoſe, he divided it into fourteen parts, and portioned them out to fifteen biſhops, aſſigning two to the Book of Revelations, on account of its difficulty. The convocation being ſoon diſſolved, the deſign was not carried into execution. The view of the hoſtile prelates was to baniſh the tranſlation already made, and to introduce one which ſhould be ſo frequently interſperſed with Latin words as to remain unintelligible to the mere Engliſh reader. In parliament, the Romiſh party ſo far prevailed, that Tindall's tranſlation was condemned and aboliſhed by law. Other verſions were, indeed, permitted to remain in force; but even theſe verſions were to be read by the higher claſſes only; and not by the lower ſort, without the king's licence. It was with no ſmall difficulty that Cranmer obtained ſome mitigation of theſe injunctions. Grafton, the printer, who had been ſo zealous in promoting the knowledge

and diffuſion of the ſcriptures, was impriſoned; nor was he releaſed till he had given a bond of three hundred pounds neither to print nor to ſell any more Engliſh Bibles till the king and the clergy ſhould agree on a tranſlation. In the year 1544, the Pentateuch was printed according to the copy which was ſet forth by royal authority; and in 1546, a proclamation was iſſued, which prohibited the poſſeſſion and the reading of Wickliff's, Tindall's, and Coverdale's tranſlations, and forbad the uſe of any other than what was allowed by parliament. This was the laſt act of Henry the eighth relative to the ſubject in queſtion. Our enlightened readers will obſerve, with pleaſure, the ardour that was diſplayed in the proſecution of religious knowledge, and the progreſs it made, notwithſtanding the difficulties and obſtructions with which it was encompaſſed.

[To be continued.]

On the ERRORS *which ariſe from* FRIENDSHIP.

'In amore inſunt hæc omnia.' TER.

BEFORE the morality of the Chriſtian revelation appeared in the world, the virtues of the moſt wiſe and learned philoſophers, however exalted by the warmth of their imagination, were inconſiſtent one with another. Of this inconſiſtency *Friendſhip* furniſhes an example which is worthy of attention. They certainly held notions upon this ſubject far more elevated than the moderns ſeriouſly entertain, and which now exiſt, if they exiſt at all, in the effuſions only of ſentimental writers. They even went ſo far as not only to doubt whether juſtice ought not to be ſacrificed to friendſhip, but even to aſſert, in poſitive terms, that it ought. Cicero, in the dialogue Lælius, contends for this with all the eloquence and argument of his enlightened mind; and one of the moſt famous ſages of Greece appears to have been of the ſame opinion, by his actions, although he entertained ſome doubt concerning it when upon his death-bed.

Diogenes Laertius ſays of Chilo, that he was ſo juſt in his actions, that in his old age he profeſſed he had never done any thing contrary to the conſcience of an upright man, only that of one thing he was doubtful: when his life drew toward an end, he ſaid to his friends, 'My words and actions, in this long term of years, have been, almoſt all, ſuch as I need not repent of, which perhaps you know to be true. Even at this time, I am certain, I never committed any thing, the recollection of which gives me any trouble, except one thing of which I am uncertain whether it were right or not. I happened to ſit with two others as judge upon the life of my *friend*: the law was ſuch that he muſt neceſſarily be condemned; ſo that either he was to loſe his life, or I to practiſe ſome quirk in the law. After much conſideration within myſelf, I conceived that I had hit upon the moſt harmleſs expedient. Silently I *condemned* him, but I perſuaded the other judges to acquit him: thus preſerving the duty both of a judge and friend; and that act now gives me ſome trouble, becauſe I fear it is not free from perfidiouſneſs and guilt, to perſuade others contrary to my own judgment.'—This is one example, of many hundreds which might be produced, to prove the inconſiſtency and imperfection of the ancient morality. Here was one of the ableſt of the Greek ſages puzzled to know whether an act of injuſtice and public perfidy was *wrong*; a queſtion, which any child in morals can now reſolve without a moment's conſideration. The truth is, they conſidered friendſhip, and certain ſocial affections, in the moſt exalted light, and were not aware that true virtue does not admit

of the practice of one good action at the expence of another. The ancients were ignorant of the true motives to virtue, the fear of God, and the hopes of immortality; and we are, therefore, rather to be pleaſed with the good we find in them, than to be ſurpriſed they are ſo often deficient and irregular in a ſyſtem, that never was perfected before the propagation of Chriſtianity.

But it is a queſtion for our conſideration, who have fallen upon times of ſuperior light and knowledge, whether friendſhip be not abuſed in the manner of the ancients, or, in other words, whether we do not often fall into the ſame errors? Whatever merit we allow to friendſhip, it ever ought to be conſidered, that there are obligations binding upon us, of a ſuperior kind; that, for inſtance, no real or acquired notions of friendſhip ought to be allowed to ſuperſede the more important calls of juſtice and truth. And I am afraid that, if we reflect upon the ſubject in this light, we muſt be compelled to condemn many of the actions of our lives with more ſeverity than it would be fair to uſe toward the ancients, who had not that knowledge of the true ſources and motives of moral action, which we poſſeſs. The difference between us and them is a ſerious, and, in ſome reſpects, a humiliating conſideration. An Engliſh peaſant, who knows juſt enough to remember the precepts of holy writ, is a better moraliſt than Zeno or Diogenes, whoſe licentiouſneſs cannot be mentioned without abhorrence; than Lycurgus, who allowed of theft as a branch of education; or than Plato, Ariſtotle, or the Catos, who were all remarkable for diſtinguiſhed vices. But whether the learned, the polite, and the opulent among us, can claim a preference to theſe ſages, is another queſtion.

The moderns, who have written with the greateſt animation on friendſhip, have, I think, in general, entertained more juſt ideas of it. They conſider the moſt romantic friendſhip as conſiſting only in ſacrificing our own advantages and intereſt to that of our friend; and in proportion to the magnitude or frequency of theſe ſacrifices, our degree of friendſhip is to be eſtimated. But none of them, as far as I know, have ever recommended than any moral principle ought to be ſacrificed even to ſerve a friend; on the contrary, the conflict between friendſhip, or love, and duty, has formed the baſis of our moſt ingenious works of fiction. It is a conflict to which few are equal; but the victory is ſo dignified, and the triumph ſo ſplendid, that no man will ever have reaſon to repent that he contended to the laſt.

It is to be lamented, however, that much corruption ariſes from that falſe conception of friendſhip which forms the ſubject of this paper. Artful men, when they wiſh to gain an important point, have recourſe to thoſe means which create a temporary friendſhip. The duration of it is not long, but it is ſufficient for their purpoſe. They contrive to inſpire thoſe with gratitude from whom they expect advantages; and gratitude is a branch of friendſhip. It is impoſſible to watch the progreſs of a popular election without meeting with many inſtances of this. I do not mean of men who give a vote in return for a ſtipulated ſum of money (it would be too much to call that gratitude or friendſhip: it is at beſt a ſpecies of profligate traffic) but of men, who having received ſome favour which their honeſt hearts feel as an obligation ſuperior to pecuniary conſiderations, are induced to act contrary to their conſcience and their underſtanding, that they may not be branded with the vice of ingratitude. An inſtance ſo familiar would perhaps not have been worth mentioning, if it were not that many men of great ſenſe, and not bad principles, will often contend againſt the *baſe ingratitude* of a man acting according to his conſcience, and forgetting every

ther obligation. It is when corruption becomes a ſyſtem, and is portioned out in parts to mankind in general, that they become thus callous to the true diſtinctions between virtue and vice, and the whole becomes a confuſed maſs.

It is of the higheſt importance in morals to have recourſe to firſt principles. In the hurry and buſtle of life, we are called upon to do many things in haſte; ſudden emergencies call for prompt action; and if we never *think*, we can never *act* well. It is for want of this, that the retroſpect of paſt actions becomes irkſome, and that the concluding days of great men have been ſo miſerable. The principles of morality are few and ſimple. Reſpecting the ſubject of this paper, nothing can be ſo obvious as that juſtice ought to be paramount to friendſhip; nor will that be any detriment to friendſhip; it will neither abate its warmth, nor check its activity. But whoever commits a crime from a motive of friendſhip, will aſſuredly find that he has fallen upon the worſt poſſible expedient to ſerve his friend, and the firſt to loſe his friendſhip. The juſt ſacrifices of friendſhip are heroic and memorable; we cannot forget them if we would; but a crime committed, under this pretence, muſt be, like all crimes, a reproach and a diſgrace, in proportion as it becomes known.

Moſt of the errors of friendſhip ariſe from timidity. We are afraid to be ſincere and juſt, becauſe we may loſe our friend. Or from an inability to render our ſincerity and juſtice as obviouſly neceſſary to him, as they appear to ourſelves. It is certain, that in the management of the temper, much delicacy is required, becauſe it is as certain that inequalities of temper, ſudden anger and peeviſhneſs, are apt to be fatal to friendſhip. Whether a friendſhip loſt by cauſes ſo apparently trifling, is worth preſerving, is a queſtion which can only be anſwered by an attentive obſerver of the particular caſe and occaſion. The friendſhip that is eaſily affected muſt be ſore and ſickly; but yet a very great error is committed, when, for the ſake of any friendſhip, we ſacrifice the conſciouſneſs of having acted uprightly. And this will be invariably the caſe, where the motive of friendſhip is that gratitude which ariſes from intereſt only, and thoſe expectations of farther advantage, which we think we cannot better ſecure than by flattering the foibles, or aiding the crimes of our friend.

From the prevalence of miſtaken notions of friendſhip and gratitude, it cannot be doubted that morality, in general, is greatly injured, and that the lower claſſes of people become relaxed in their duty. To oppoſe this growing corruption, an oppoſite virtue appears now and then, and is, at leaſt the *profeſſed* admiration of mankind: it is called *Independence*. This, in the ſenſe we underſtand it, was not known by the ancients, neither the Greeks nor Romans have a a word to expreſs it. Horace, indeed, depicts ſuch a character, in general terms, in two of his odes; in that beginning 'Integer vitæ, &c.' and that 'Juſtum & tenacem propoſiti virum, &c.' But, according to our acceptation of the word, it is not of very long ſtanding in this country. It is, however, a word uſed to expreſs the character of a man who allows no earthly conſideration to interpoſe between him and his duty, in all poſſible caſes. Vulgarly, it is reſtricted to the ſingle caſe of political bias. That it *is* a virtue which confers the higheſt honour on him who acts agreeably to it, is acknowledged by that eſteem which the worſt of men dare not refuſe for ſuch a character. But that it is ſcarce, that few have the induſtry to acquire an independent ſituation, few the good ſenſe to be ſatisfied with it, and few the fortitude to reſiſt temptation, is a melancholy truth. Were this not the caſe, we ſhould not wonder, 'with a fooliſh face of admiration,' at the few in-

ſtances which occur of genuine independence.

It may be obſerved of this, as of all the heroic virtues, that they never interfere with the warmth of ſocial affection: on the contrary, they exalt and purify friendſhip and affection; for, where can they be ſuppoſed to exiſt in perfection, unleſs in a mind firm in the purpoſes of juſtice and truth, and above being ſwayed by the petty motives of intereſt? If we conſider the moral qualities in their proper order, that juſtice and truth are the firſt and moſt important of all, and that they guide and regulate the affections, we ſhall not be at a loſs to ſee that the errors of friendſhip are many and dangerous, and that an undiſtinguiſhing attachment, not founded upon juſtice, muſt be attended with the diſappointing peeviſhneſs of caprice, and the unexpected regret of misfortune. C.

THE HISTORY OF SIGNS.

[From the Looker-on.]

WITH reſpect to the hiſtory of Signs, it is a ſubject, part of which, I am well aware, has been pre-occupied by the Spectator; but a great deal remains yet to an attentive obſerver; and in this fairy world new and myſterious phænomena are continually ariſing to tempt conjecture, and excite inveſtigation.

As to the moral purpoſes to be anſwered by this enquiry, I cannot boaſt much of them, unleſs you will allow that it affords an uſeful leſſon, by occaſioning us to reflect what a ſtrange ſort of creation we ſhould gather around us, if we were left to contrive for ourſelves, and into what an unaccountable perplexity we ſhould throw the whole economy of nature, if ſhe were once to ſubmit her work to our correction.

Though I am well convinced that ſign-poſts are no modern invention, but of conſiderable antiquity, yet I believe that the Buſh, which ſtill keeps its place at country wakes, and which uſed to be hung up at the door of almoſt every cottage, to ſignify that the owner had tapped a freſh barrel of beer, was the indication generally adopted in very early times. I have never read the Greek or Roman writings in a view to this object, but have no doubt of their exiſtence among them. I have ſomewhere ſeen *ad bubula capita* at the ſign of the bull's head; and I recollect a paſſage in Quintilian to this purpoſe, *Tabernæ erant circa forum, ac ſcutum illud ſigni gratiâ poſitum*—'There were ſhops about the market-place, and that ſhield was put up by way of ſign.' I ſhall engage no further, however, in this deep part of the enquiry, but ſhall begin with the creation of thoſe monſtrous productions which ſign-poſt painters have been accuſed of introducing, but which in reality are to be charged to the account of the heralds. The Golden Griffin, the Green Lion, the Black Swan, and the Blue Boar, are nothing more than a griffin, or; a lion, vert; a ſwan, ſable; and a boar, azure; the ſimple heraldic diſtinction of the neighbouring Lord Paramount in the feudal times, and adopted as a ſign by ſuch of his tenants as opened houſes for the reception of the public. The ſame ſyſtem ſtill prevails in every part of the kingdom; and an attentive traveller, who is converſant with heraldry, may know what families are the principal proprietors of the eſtates over which he paſſes, without aſking the queſtion. Thus, in North Wales, the upright Hand, and the Eagles, will inform him whether he is upon the territories of the Myddeltons or the Wynnes. The Eagle and Child, commonly called, in Lancaſhire, the Bird and Baby, ſerves in like manner to point out the eſtates of the Earl of Derby, who bears that device for his creſt.

When there is occaſion to paint over again an heraldic ſign, the ſcientific part being little attended to, it frequently happens, that only the principal component parts of the arms are retained upon the new board; to which circumſtance we owe the Three Tuns, the Three Goats, the Three Swans, the Three pretty Pigs, and innumerable trios of the ſame kind. The moſt reſpectable claſs of ſigns is that of ſuch as relate to hiſtorical ſubjects; ſome of theſe record minute facts which might otherwiſe have been loſt to poſterity. I remember to have ſeen at Sherſton in Wiltſhire, a ſign called the Rattlebones: upon making enquiry into the ſignification of ſo obſcure a name, which was not at all explained by a half-obliterated painting on the ſign-poſt, I learned that it was intended to commemorate a Britiſh hero, who, in fighting againſt the Danes, received a dreadful wound in the abdomen, and who, in this critical ſituation, by holding a tile againſt the wound, preſerved his own life till he found means to take away that of his enemy. The claſſical ſign of the Pick-my-toe relates to the well-known ſtory of the Roman, who would not ſtop to pick a thorn out of his foot before he had delivered his meſſage. The Roſe and Crown ſtill reminds us of the badges of the Houſes of York and Lancaſter. The William of Walworth, repreſented in the act of arreſting Wat Tyler, is very properly choſen as a ſign at the place whence he took his name. The reſtoration of Charles the Second introduced among us the common ſign of the Royal Oak; and to the Houſe of Hanover we owe the troops of White Horſes which pranced upon the ſign-poſts of our Whig Inn keepers. I ſuſpect that the Hole in the Wall alludes to ſome obſcure hiſtorical fact.

Sacred ſtory has not been neglected by theſe hiſtorical ſign-painters; nor have they forgotten the myſterious character of the original in their unintelligible mode of repreſentation. In Chandos-ſtreet, a dragon ſupporting a bell, inſinuates the ſtory of Bell and the Dragon. The Two Spies, the Baptiſt's Head, the Noah's Ark, and the Jacob's Well, ſtill beſpeak a certain orthodoxy in the landlord, which, by an eaſy tranſition, we carry to his ale and october. Among the few ſigns which propriety has ſuggeſted, I have remarked a portrait of Simon the Tanner of Joppa, at Bermondſey, and Eliſha's Raven at a butcher's ſhop in the Borough, with a mutton-chop in its mouth. The King or Queen's head, on the ſign-poſt of an Inn, affords a pretty ſure criterion by which we may gueſs the date of its original eſtabliſhment, as the reigning monarch always lends his countenance upon theſe occaſions. Sometimes indeed, on freſh painting the ſign, the old king is depoſed, and a new monarch reigns in his ſtead; but no landlord that feels for the antiquity of his houſe will ſuffer this revolution to take place. Henry the Eighth is ſtill to be ſeen at Lambeth; and conſidering his hoſt-like appearance, I wonder more freedoms have not been taken with his perſon in this way. A Queen Eliſabeth is as ſcarce as an Otho. There are but few Charles', perhaps becauſe the head of a Stuart was thought an uncertain tenure: a greater proportion of King William, who is properly enough exhibited where the liquor of his country is ſold; more of Queen Anne than of George the Firſt; and ſeveral of the late King. A royal progreſs produces a number of new kings heads: on theſe occaſions the painters work faſter than the horſes travel; and I have known his Majeſty's noſe and chin get the ſtart of him by a full quarter of a mile. Biographical ſigns frequently occur in the cities of London and Weſtminſter; and they are generally placed with due regard to the reſidence or place of reſort of the perſons whom they repreſent—as the Eſſex Head, the Sir John Falſtaff, the Sir Paul Pindar, the Whittington and his Cat, and many more of the ſame kind. A practice that will enable our Engliſh biogra-

phers to decide between contending cities, in naming the birth-place of an illuſtrious character.

The devices of our tradeſmen might in general bear a much ſtronger relation than they do to their ſeveral occupations: ſome indeed are leſs unhappy than others. The peacock under a rainbow, is well enough choſen for a ſilk-dyer; the wheat-ſheaf is a good emblem for a corn-chandler; and the ham and chicken are not much amiſs for a cook's ſhop. The naked boy with a pair of breeches in his hand, in Monmouth-ſtreet, makes a more forcible appeal to us than the unwearied courteſy of the bowing-beggar-prince himſelf, ſtriding from one frontier to the other of his ragged empire. The head of Sir Walter Raleigh very properly overlooks the door of a dealer in tobacco, as we owe the introduction of the plant to that illuſtrious admiral. Many tradeſmen are contented with the repreſentation of the article in which they deal; and this would be perfectly unexceptionable, were it not that the mercantile principle of turning every thing to money had induced them to cover their ſigns with gold. Every object is ſeen by them through this jaundiced medium; and we have golden boots, golden periwigs, golden razors, golden hams, and golden ſugar loaves. As for the fiſh, they all look as if they came out of Pactolus' ſtream. The cook in Rag-fair, who hangs out every morning a piece of raw-beef, has hit upon a very natural mode of announing his occupation; while the Great A and the Bouncing B, at a printer's door, is perfectly in *character*.

The bee-hive, as emblematical of induſtry, might be adopted by any trade; but I obſerve it is moſt frequently uſed by the linen-drapers. The Adam and Eve too is a favourite with them, being intended to exhibit the contraſt between the vegetable-drapery of our firſt anceſtors, and the varied decorations of a modern drawing-room. The ingenuity of the ſiſterhood, in the fabrication of lace and the ornamental article of female attire, may account for the ſign of the Three Nuns at a milliner's ſhop; and I find great fault with Nun and Crucifix milliners in York-ſtreet, Covent-garden, for ſuffering a device ſo ſuited to their names and profeſſions to eſcape them. If theſe ladies, on a matter of ſuch moment, thought it neceſſary to be furniſhed with a precedent, I could have ſupplied them with one on the grave authority of Batt. Pigeon, of famous memory; who, in the adoption of three pigeons for his ſign, ſhewed it to be his opinion that a coincidence of name was a ſufficient apology. Why a haberdaſher ſhould live at the Hen and Chickens, I cannot imagine, or a tea-dealer at the ſign of the Graſshopper; unleſs we ſuppoſe a tranſition from one buſineſs to another in the ſame ſhop, without regard to the conſequent anomaly of the ſigns: indeed, unleſs for this way of accounting for it, the adoption of ſigns has ſometimes ſuch little foundation, that it would look almoſt like Egyptian idolatry.

We ſhould be at a loſs to gueſs at the meaning of the leathern doublet at a great iron foundery in the Borough, were we not informed that it was placed there by the firſt inſtitutor of the manufacture, who, from a very humble beginning, roſe to diſtinguiſhed opulence, as a repreſentation of the identical doublet which he wore when he firſt came up to the metropolis. The Z's, an ancient ſign at grocers ſhops, look very enigmatical; but I am told they allude to the word zinziber, or ginger, and intimated the ſale of that article. Many have been the conjectures about the ſign of tha Good Woman, which is uſed by the colour-men; and very undeſerved jokes have been paſſed upon the fair ſex on this occaſion. Were I to hazard an opinion upon ſo delicate a ſubject, it would be, that at the time when every trade and occupation had its patron-ſaint, male or female, the colour-men fixed upon ſome good

woman who had loſt her head by an accident not uncommon in the days of ſaintſhip. The origin and meaning of the barber's pole has afforded alſo a great field for conjecture: it is generally, however, ſuppoſed to allude to the joint occupation which they formerly profeſſed; and its twiſted ornament has been thought to repreſent the fillet which they uſed in bleeding.

I cannot quit theſe gentlemen without beſtowing upon them the praiſe they ſo richly deſerve for the moderation of their terms, and their ſteadfaſt adherence to their orignal price, while the charges for every other article in life are ſo improving upon us. This moderation is particularly commendable in men of genius and literature; and under this head I introduce to your notice Mr. Puff, who has inſcribed the following couplet over the entrance of an alley in Shoreditch:

'Up this court lives A. Puff,
Shaves for a penny, and thinks it A. Nuff.'

The junction of many animals, utenſils, &c. upon the ſame ſign, may be accounted for in different ways. Some appear to be put together merely for the ſake of alliteration, as the Lamb and Lark, and the Gooſe and Gridiron; a figure ſo degraded by the abuſe of it in modern poetry, that at preſent it can hardly be diſhonoured by any application. Others have a ſort of connexion as the Fox and Gooſe, the Dog and Duck, and the Ship and Star. The Bolt and Tun I take to have been a rebus upon the owner's name; and many others, it is probable, may be accounted for in the ſame manner. The Cock and the Bottle has, I imagine, ſome connexion with the tranſactions of the Cockpit. The Cat and Wheel is a corruption of Catherine Wheel. The Bull and Mouth, and the Bull and Gate, are well known to be corrupted from Boulogne Gate and Mouth, very faſhionable ſigns at the time of taking that city from the French. Many of theſe junctions, otherwiſe very unaccountable, have been occaſioned by the removal of landlords from one inn to another, who, unable to forget their local attachments, have frequently incorporated their new ſign with that of their old habitation, however monſtrous the union might be. Some ſuch idea as this will help us to account for the good underſtanding that ſubſiſts in this new creation between beings which have ſeldom or never met in any other; as the Lamb and Dolphin, the George and Blue Boar, the Cock and Roſe, the Black Lion and Three Bee-hives, and the Blue Mare and Magpie. Of this ſort likewiſe is the celebrated Bell Savage inn on Ludgate Hill, the moſt ancient perhaps in the city of London. This ſign has been the ſubject of various conjectures, many of them ingenious, but all erroneous. By ſome it is attributed to a lady of the name of Arabella Savage; others ſuppoſe it to allude to an old romance, and to be a corruption of *La Belle Sauvage*. The ſign formerly repreſented a ſavage man ſtanding by a bell; and the truth is, that it aroſe from an union of two inns which bore theſe reſpective ſigns. This piece of information I gained from an ancient record, in which it is deſcribed as the Savage Inn, *alias* the Bell upon the Hoop. There is reaſon for ſuppoſing that moſt ſigns conſiſted formerly of carved repreſentations fixed upon a hoop; and ſeveral old books mention the Crown upon the Hoop, the Bunch of Grapes upon the Hoop, the Mitre upon the Hoop, and the Angel upon the Hoop. A ſign of this nature is ſtill preſerved in Newport-ſtreet, and is a carved repreſentation of a bunch of grapes hanging within a hoop. The Cock on the hoop may be ſeen alſo in Holborn, painted on a board, to which perhaps it was transferred on the removal of ſign-poſts. It is probable alſo that this ſign may have given riſe to the phraſe of 'Cock a Hoop.' The Mitre near the Temple is ſtill called, according to the old manner

of ſpelling, 'The Hope and Mitre;' though ſome of your readers will be diſpoſed to put a more literal conſtruction upon this ſign, and judge the connexion to be by no means unnatural.

When a tradeſman abandons his original calling, and enters into what is termed the public line, he frequently engrafts on the ſign ſome alluſion to his old occupation; a circumſtance which has likewiſe proved a ſource of many ill-ſorted couples, as the Magpie and Horſe-ſhoe, the Angel and Sugar-loaf, the Ship and Artichoke.

A ſign is ſometimes an indication of the favourite purſuits and amuſements of the landlord, or of the prevalent ſports for many miles round: thus the Ring of Bells, the Cricket-Players, and ſuch-like diverſions, are very common upon every road. The Hand and Flower prevails among florifts; though I have ſeen this idea greatly improved upon, in the late king's reign, by an eminent gardener, who, being poſſeſſed of a beautiful carnation called after the queen, procured an accurate portrait of it, and placing it at his door as a ſign, wrote underneath, 'My Queen Caroline.'

Among ſigns diſtinguiſhed by their ſingularity, may be reckoned the Tumble-down-Dick, in the Borough; the Old Taberd Inn, in the ſame place, celebrated in Chaucer's Canterbury Tales; the Two Sneezing Cats, in Houndſditch; and the Four Winds. The Bag of Nails, at Pimlico, formerly called the Devil and Bag of Nails, has been ſuppoſed to have been a repreſentation of Pan and the Bacchanalians. I have ſeen a book, however, wherein it is called the Blackamoor and the Woolpack, *alias* the Devil and Bag of Nails. The Labour-in-vain, or the Devil in a Tub, at Canterbury, alludes to the old fable of waſhing the Blackamoor white. The celebrated Devil Tavern, near Temple-Bar, now no more, was an inſtance of a remarkable miſnomer: the ſign, properly ſpeaking, was that of St. Dunſtan, the patron of the neighbouring church, and repreſented him in the act of performing that ſignal exploit of pulling the devil by the noſe with a huge pair of tongs. Notwithſtanding this humiliating condition of his infernal majeſty, by a natural obliquity in our minds, the ſign was unhandſomely transferred from the ſaint to the devil, from whom the tavern has been called time out of mind.

The Checquer, ſo common at the door of a public houſe, is ſaid to have been intended formerly as an intimation that draught-boards were kept within for the entertainment of the cuſtomers. The colours of the checquer uſed to be red and white, whence the houſes ſo diſtinguiſhed were called red houſes; and they were at length ſo numerous, that a red houſe became a general name for a tavern, and is uſed as ſuch in many of the old plays. I muſt diſagree with thoſe who ſuppoſe the checquer to refer to the arms of a duke of Norfolk, who had formerly the profits of a duty upon ale-houſes; for the arms alluded to, are thoſe of Maltravers, quartered only by the duke of Norfolk's, which are checquers *or* and *azure*, or blue and gold; colours which do not occur at a checquer inn.

The ſolemn myſtical ſign of the World's End is variouſly adumbrated. Sometimes the emblem is a man and a woman walking arm-in-arm, with the following lines underneath:

'I'll go with my friend
To the world's end.'

Sometimes it is the figure of a globe on fire, as at Chelſea.—The various ſigns of the Salutation exhibit divers ſpecimens of dreſs and manners, according to their dates. Sometimes we behold two fine gentlemen of the laſt century, equipped *en cavalier*, and exchanging moſt courteous ſalutes, to the effect of which their horſes conſpire by their caperings and curvettings. Sometimes two antiquated beaux, with long buckramed accou-

trements and flowing perukes, joining hands, and bowing almoſt to the ground. The 'Welcome Rodney to the Prince of Wales,' at Lambeth, is the only modern ſalutation I recollect.

We are put in mind of a ſtriking period of our hiſtory by the Saracen's Head. The rough manner in which that people treated our cruſaders, and the ſounding tales that were told of them by thoſe who returned from engaging with them to their own country, gave this ſign the formidable appearance it wears to this day.

The local hiſtory which ſigns afford us is not to be deſpiſed, The Mitre at Lambeth, and the Hop-pole at Worceſter, are ſpecimens of this ſort. Biſhop Blaiſe, the patron of the wool-combers, adorns a ſign in moſt towns which have any connexion with the woollen manufacture. The Dog and Bear, in the Borough, perpetuates the memory of the Bear-garden there; and Simon the Tanner, as I have ſaid before, juſtly holds a place among the brethren of that myſtery at Bermondſey.

It is pleaſant enough to remark the conteſts about the point of originality between neighbouring ſigns of the ſame deſcription. Some years ago, the diſputes ran very high between the magpies on the Windſor road; and the pride of antiquity had nearly carried back their claims to the ark itſelf. We had accordingly, the Magpie, the Old Magpie, and the Old Original Magpie.

Sign-poſt poetry is much too extenſive a field for me to enter upon in this place; but I almoſt wonder that the prevailing taſte for ſcraps and collections of all ſorts, has not ſet ſome of my worthy contemporaries to work upon theſe ſpecimens. I think admirers in this age might be found for them; and it is evident how fruitful ſuch a compilation would be in ſubjects for the painters and engravers of the day, who are graſping at every thing that can be embodied and repreſented, and laying the whole world under contribution to their arts. The young ſtudent, who ſets out from the Bull Inn, in Holborn, to travel to Oxford, may remark his approach to the ſeat of the Muſes, in the following models of alehouſe poetry.

'Fine Purl rare o,
Fit for a hero.
If not in haſte,
Step in and taſte.'

'I am a Fox, you plainly ſee;
There is no harm can come of me;
My maſter he has plac'd me here,
To let you know he ſells good beer.'

I have now nearly exhauſted my ſign-poſt erudition, which may perhaps have afforded ſome information that is new and intereſting to many readers. At leaſt it may ſhew what a multitude of topics there are that have ſcarcely been breathed upon, and how objects that ſeem of no importance are connected with other objects of real magnitude in the ſyſtem of life, and ſupply ſources of amuſement, and matter for contemplation.

MEMOIR *on the* PURIFICATION *of* CORRPUTED WATER: *Read at the* Economical Society *at* Peterſburgh; *by Mr.* Lowitz.

WATER is one of thoſe ſubſtances without which mankind cannot exiſt, yet every one knows that it is very apt to become putrid, and to contract, in conſequence of its being ſo, qualities which render its uſe unſafe. This circumſtance is particularly embarraſſing in ſea voyages; and it deſerves no leſs conſideration in thoſe diſtricts where the inhabitants are often obliged to make uſe of ſtagnant water, or of ſuch as, from its hepatic taſte and ſmell, is very diſagreeable. It would be uſeleſs here to enumerate the various diſorders occaſioned by the uſe of ſuch

waters; but it is undoubtedly an object of great importance to make known the means by which the putrefaction of water may be prevented, and by which that water wherein putrefaction has already taken place, may be rendered perfectly sweet.

Having employed myself, during the course of last year, in making a great number of experiments on the purifying powers of charcoal, I saw with great satisfaction, that it possessed, among other properties, that of almost instantly depriving the most putrid water of its bad smell. From that circumstance, I immediately conceived an idea that it might have a very powerful effect in preventing water from becoming putrid, and the numerous trials I have since made have convinced me that I was not deceived in my opinion.

Pure water, properly so called, when deprived of all heterogeneous parts, is not subject to become putrid; but it is very difficult to keep it long in a pure state, on account of its dissolving powers. To preserve water for a length of time in that state, it would be necessary to keep it in vessels of glass, or of earthen ware; but the brittleness of these vessels renders it impossible to make use of very large ones, and we are therefore obliged to have recourse to wooden vessels, which, though they are not subject to be broken, like the others, have the great disadvantage of imparting to the water a great quantity of mucilaginous and extractive particles, which hasten its putrefaction. It is well known that these particles, in a state of division, furnish an innumerable quantity of living creatures, the almost perpetual and uninterrupted destruction and regeneration of which communicate to water that degree of corruption and putrefaction which renders its use so dangerous; it is not, therefore, from the water itself, but from the continual decomposition of the substances dissolved in it, that its disposition to putrefaction arises.

From what has been said it evidently appears, that the first means of preserving from putrefaction water which we are obliged to keep in wooden vessels, or casks, consists in having these reservoirs perfectly clean. The smallest quantity of matter already corrupted being left in them acts as a real ferment, and very quickly disposes the fresh water, with which these vessels are filled, to become putrid in the same manner. For this reason I advise, that the casks, or other vessels, be well washed with hot water and sand, or with any other substance capable of removing the mucilaginous particles; and afterward, that a certain quantity of powder of charcoal be employed, which will entirely deprive such casks, &c. of the musty or putrid smell they may have contracted.

When water is preserved by having certain substances mixt with it, these substances act, either by their anti-putrescent powers, or by mechanically absorbing the putrified particles. Vitriolic acid possesses the first of these properties, and powder of charcoal fulfils the second intention, in a very striking manner.

To satisfy myself that charcoal, when used alone, possesses the property of preserving water from corruption, I undertook, in the summer of the year 1790, a course of experiments which completely fulfilled my hopes; but, at the same time, I was convinced that the effect of the charcoal is rendered much more speedy by using, along with it, some vitriolic acid.

The following, according to the result of my experiments, is the best proportion of charcoal powder, and vitriolic acid: viz. one ounce and a half of charcoal in powder, and twenty-four drops of concentrated vitriolic acid, (oil of vitriol) are sufficient to purify three pints and a half * of

* The *stoff*, which is the measure made use of by Mr. Lowitz, is equal to about three pints and a half.

corrupted water, and do not communicate to it any ſenſible acidity. This ſmall quantity of vitriolic acid renders it unneceſſary to uſe more than one third part, at moſt, of the charcoal powder which would be wanted if the acid were not made uſe of; and the leſs of that powder is employed, the leſs is the quantity of water loſt by the operation, which, in ſea voyages, is an object worthy of conſideration. In proportion to the quantity of acid made uſe of, the quantity of charcoal may be diminiſhed or augmented; and it muſt be obſerved, that all acids produce nearly the ſame effects. Neutral ſalts alſo, particularly nitre and ſea-ſalt, may be uſed for the purpoſe in queſtion, but vitriolic acid certainly is preferable to any of theſe; water which is purified by means of this acid and charcoal will keep a longer time than that which is purified by charcoal alone.

The cleanneſs of the caſks in which water is kept, in ſea voyages, is an object which ſhould never be neglected: I have already deſcribed the beſt method of cleaning them, and of depriving them of any bad ſmell; and it would not be amiſs if that operation were repeated every time they are about to be filled with freſh water. I would adviſe that ſix or eight pounds of powdered charcoal be uſed to each caſk, (it is better to put too much than too little of this powder) and as much vitriolic acid as is ſufficient to communicate to the water a degree of acidity hardly to be perceived. To hinder the charcoal from ſettling at the bottom of the caſk, in the form of a paſte, it will be proper to ſtir the whole together with a ſtick, at leaſt twice every week; by this means the charcoal will be better diſperſed through the whole maſs of water, and conſequently will perform its office more completely.

Powder of charcoal and vitriolic acid are two antiputreſcent ſubſtances; the firſt prevents the water from acquiring that yellow colour which it uſually contracts by time, and the acid particularly contributes to clarify the water, which the powder of charcoal, when employed alone, generally renders turbid. If we wiſh to make uſe of the water ſo preſerved, we ſhould try it firſt, by paſſing a ſmall quantity of it through a ſtrainer, in the form of a jelly-bag, filled with powder of charcoal; ſuch a ſtrainer or bag ſhould always be in readineſs, to be made uſe of for ſuch trials.

When we mean to purify any given quantity of corrupted water, we ſhould begin by adding to it as much powder of charcoal as is neceſſary to deprive it entirely of its bad ſmell. To aſcertain whether that quantity of powdered charcoal was ſufficient to effect the clarification of the ſaid water, a ſmall quantity of it may be paſſed through a linen bag, two or three inches long; if the water, thus filtered, ſtill has a turbid appearance, a freſh quantity of powdered charcoal muſt be added, till it is become perfectly clear: the whole of the water may then be paſſed through a filtering bag, the ſize of which ſhould be proportioned to the quantity of water.

If vitriolic acid, or any other, can be procured, a ſmall quantity of it ſhould be added to the water, before the charcoal powder is uſed; the quantity of acid muſt be regulated according to the ſtate of putridity in which the water is; it ſhould be ſufficient to communicate to the water a degree of acidity juſt perceptible to the taſte. If the water is intended merely for dreſſing meat and vegetables for the ſhip's crew, inſtead of the acid, ſuch a quantity of ſea ſalt as would have been proper for ſeaſoning the above articles, may be employed. Saline ſubſtances, like acids, haſten the effects of the charcoal powder; by making uſe of acids (as was before obſerved) a much leſs quantity of powdered charcoal is neceſſary; and, ſo eaſy is the proceſs to any one a little accuſtomed to operations of this kind, that four or five minutes only are required to render ſeveral gal-

lons of very putrid water fit to drink.

To improve the taſte of thoſe ſpring waters which have naturally an hepatic flavour, and are therefore unpleaſant to make uſe of, nothing more is neceſſary than to filter them through a bag half filled with powder of charcoal; if ſuch waters are not very much loaded with mucilaginous particles, the addition of an acid is not neceſſary. With reſpect to the beſt method of preparing the powder of charcoal, what I have ſaid on that ſubject in Crell's Annals for the year 1788, pages 36 and 131, of the ſecond volume, and in the firſt volume for the year 1791, pages 308, 398, and 494, may be conſulted.

Powder of charcoal, when prepared according to the method deſcribed as above, is a very light ſubſtance, a circumſtance which may perhaps appear embarraſſing, on account of the room it will take up in a ſhip, ſuppoſing the quantity of it to be in proportion to the quantity of water taken on board. The following is the reſult of my experiments reſpecting the ſpace required for ſtowing the charcoal.

Firſt, four ounces and a half of powdered charcoal, a quantity which is ſufficient to purify three pints and a half of water, when no acid is made uſe of, take up as much ſpace as ſixteen ounces of water; but, if this powder is ſtrongly compreſſed, it will take up only the ſpace of nine ounces of water; conſequently two caſks of powdered charcoal would be required to purify eleven caſks of water.

Secondly, one ounce and a half of powdered charcoal is ſufficient to purify three pints and a half of water, provided a ſmall quantity of vitriolic acid, or ſea-ſalt, is at the ſame time made uſe of; one caſk of powdered charcoal, therefore, if tightly packed, is ſufficient for ſeventeen caſks of water.

In the laſt experiments I made on this ſubject, I found that ſix drachms of powdered charcoal were ſufficient to deprive three pints of water of its bad ſmell, and to render it perfectly clear, provided, at the ſame time, twenty-four drops of vitriolic acid were added; in this way, therefore, one caſk of powdered charcoal would be ſufficient to purify thirty-four caſks of corrupted water. Theſe experiments, however, muſt be conſidered as liable to ſome variation; for, in order to obtain effects equal to thoſe I have related, the charcoal powder muſt be prepared with the greateſt care; it muſt alſo be obſerved, that though the above ſmall quantity was found ſufficient to deprive the water entirely of its bad ſmell, and to render it very clear, a larger quantity will be required to deprive it of its bad taſte.

In order to ſave the charcoal powder on board a ſhip, as that is an article not eaſily procured at ſea, I adviſe, that the powder ſhould not be thrown away after it has been once uſed; for, if it is afterward well dried, and again beat to powder, it will by that means acquire new ſurfaces, and will ſerve, a ſecond time, to purify a quantity of water almoſt as great as that for which it was uſed the firſt time. Nay, charcoal powder which has been ſeveral times made uſe of, and has in conſequence thereof entirely loſt its purifying power, will immediately recover it by being made red hot in a cloſe veſſel; this operation is certainly a troubleſome one on board a ſhip, but it may, perhaps, in ſome circumſtances, be rendered more eaſy. As on board all ſhips there is a fire every day, economy requires that we ſhould ſave the charcoal of the wood which has been uſed; and, inſtead of letting it burn to aſhes, it ſhould be diſtinguiſhed by water, or by any other means, and kept to be made uſe of when wanted.

The cinders of pitcoal, provided they are perfectly burnt, and reduced to powder, may ſerve, in caſe of neceſſity, for the purification of water; but, when this kind of coal is made uſe of, no acid of any kind muſt be added to the water, as the metallic

particles which pitcoal contains, even after it is thoroughly burnt, might, if acids were employed, communicate dangerous qualities to the water.

It is proper to obſerve here, that charcoal takes from the water a part of the acid which has been made uſe of; if two drops of oil of vitriol are put into four ounces of water, the water will become ſenſibly acid, but this acidity will immediately diſappear, if a ſmall quantity of powdered charcoal be added to the water.

THE MISERIES OF A RETIRED LIFE.

To the Editor of the Univerſal Magazine.

Sir,

THE advantages of retirement have been expatiated upon by many writers on moral topics, who very juſtly argue that it becomes a rational creature to devote ſome time to meditation upon paſt actions, of which he is to give an account, and to prepare for leaving a world to which he is no more to return. All this is very eaſily comprehended, and the many other fine arguments in favour of retirement made a great impreſſion upon me at one time. I ſhould have been very happy, indeed, to have confirmed them by my own experience, had it not been for one little circumſtance of conſiderable moment in order to ſettle the queſtion, namely, that after a long trial I have found retirement impracticable.

In former days I was a tradeſman in the city of London, and for many years carried on buſineſs with increaſing proſperity. I may ſay, indeed, that every thing ſucceeded which I undertook. While others around me were driven by diſtreſs and diſappointed ſpeculations, by paper credit, and accommodation-bills, into the Gazette, I ſtood firm, and, upon 'Change, was univerſally reported to be a *good man*. From this character, you are not to wonder if I very rapidly paſſed into that of a *warm man*; and, in truth, having realized ſeveral thouſand pounds, and advancing, at the ſame time, toward the down-hill of life, I began to be captivated by the beautiful deſcriptions preſented to me of the happineſs of retirement. Having few relations to interfere with my inclinations, I met with no obſtacles. I parted with my buſineſs, upon eaſy terms, to two induſtrious and faithful ſervants, who had lived ſome years with me, and deſerved every return I could make; and having purchaſed a ſmall freehold in the weſt of England, I bade an everlaſting adieu to the buſtle and noiſe, the ſmoke and confuſion, of a vaſt and overgrown metropolis.

It would be unneceſſary to give you a particular deſcription of my country reſidence. Suffice it to ſay, that it was ſituated in a moſt pleaſant vale, and poſſeſſed all thoſe advantages which are ſo pompouſly, and often falſely, trumpeted forth by the auctioneers. Here I felt myſelf light as a bird that has eſcaped the confinement of its cage. Here I expected to enjoy the bliſsful tranſition from ſociety to ſolitude, from care to eaſe, from vexation to tranquillity. But what are the hopes of man? I had not been here many weeks, before I diſcovered that ſomething very eſſential was wanting to fill up the meaſure of my happineſs; ſomething which I could neither beg, borrow, nor buy. In one word, I wanted ſomething to do. In the midſt of retirement, my mind ſtruggled for employment, and dragged me back to thoſe days when I knew not the miſery of a vacant hour, and when every hour brought with it its pleaſing anxieties or profitable engagements. Here was no employment, no calls, no avocations. Here were no goods to look over and examine, no ſales to attend, no cuſtom-houſe buſineſs to be done, no attendance upon 'Change, no books

to poſt, invoices to ſend, or bills to negociate. Theſe had been the employment of my former life; and, deprived of them, I had nothing upon which I could learn to fix my attention. It was very ſingular, you will ſay, that all this never occurred to me before. Yet nothing is more certain, than that no ſuch idea ever entered my head, till I had leiſure to look my ſituation in the face, and contemplate myſelf as a ſolitary, helpleſs, and uſeleſs being.

It was now ſuggeſted to me, that however true this might be, yet it was no more than had happened to others. Gentlemen who retire are no longer to think of buſineſs: they are to partake of ſuch ſports and pleaſures as the country affords, and lay up a ſtock of good health and ſpirits, prepare a vigorous old age, and bid defiance to care and time. This was bewitching language, and I liſtened to it with conviction. I entered with ſpirit into the views of my neighbours; but I ſoon found that the ſports of the country are learned with difficulty, and followed with a very bad grace by a mere man of London buſineſs, who has reached his grand climacteric. I had been all my life, even from my boyiſh days, an induſtrious plodder behind the counter and the deſk. It could not, conſequently, be very eaſy to transform one of my habits into a man of pleaſure and a keen ſportſman. The firſt leſſons I took were miſerably unſucceſsful, and attended by conſequences more of a painful than pleaſurable nature. My attempt to follow the hounds was attended by a diſlocation of the ſhoulder, which laid me up for ſix weeks; and, in my firſt attack upon a covey of partridges, I put out my ſhoulder again by the recoil of my piece. Theſe violent amuſements, in ſhort, were not ſuited to my taſte or capacity, and too evidently interfered with my ſafety to be followed longer. Fiſhing, therefore, was recommended as a more eaſy and ſecure diverſion, and I was ſoon inſtructed in all the myſteries of baits, and hooks, and bites, and worms; but, as before I had too much exerciſe, here I had too little, and had very nearly fallen into the river faſt aſleep; when I gave up this purſuit alſo.

It now came into my head, eſpecially as winter approached, that reading would fill up my hours agreeably. I never had an averſion to reading, as far as I can remember of my early likings and diſlikings; but I had always found ſo much employment in buſineſs apparently, and perhaps really, more urgent, that, for many years, my reading was confined entirely to a newſpaper, with an occaſional peep into the London Directory, or the Red Book; and ſuch a chain of reaſoning, or narrative, as other books contain was not familiar to me. I imputed this, however, merely to want of time; and that obſtacle being now removed, I flattered myſelf that I ſhould be able to increaſe the advantages of retirement, by ſtoring my mind with food for reflection. Books were accordingly provided: but here, as in hunting, fiſhing, and fowling, all was new and untred ground. When I had completed my library, I diſcovered that my bookſeller had not, and indeed could not, ſend me what I moſt wanted, a taſte and habit of reading. My ſleepy fits came on again, and there are few of the eminent writers of the preſent day (whatever they may think of their genius) whom I have not honoured with the approbation of a *nod*.

One reſource was yet left. I now began to think that company would ſerve to divert me, and kill the heavy hours. For that purpoſe I cultivated the acquaintance of an extenſive neighbourhood. My wealth, and I hope my manners, which were, at leaſt inoffenſive, procured me an eaſy introduction into many agreeable families. But here, too, I was doomed to experience the misfortune of having gone through life with one ſtock of ideas, and that a very ſmall one, 'of no uſe to any perſon but the owner.'

The converſation of my friends turned upon ſubjects with which I was totally unacquainted. Now and then, when the newſpaper came in, I could expatiate upon London politics, and the comparative merits of many great London politicians. But this could not laſt long; my ſtock of politics was the ſmalleſt of all my property, and I was too far from Guildhall, or St. Stephen's chapel, to procure a freſh ſupply. During the greater part of my viſits, I was condemned to hear long debates on ſubjects foreign to my underſtanding. The ſtate of wheat, barley, and oats; the modes of rearing and feeding cattle; the farm-yard and the dairy; the cutting down of timber, and the planting of potatoes, were often diſcuſſed with great warmth, and at great length; but all was unintelligible to me; nor could I find a man in the whole pariſh who underſtood any thing about nainſooks, and bandannoes, ſooſayes and taffeties, callimancoes, muſlinets or dimities. I began to have a very indifferent opinion of their capacities; I believe they had none of mine, and it was more than once whiſpered in my hearing, that 'your Londoners know nothing out of the ſound of Bow bells.'

In this uncomfortable ſituation I remained for nearly two years; my health became affected from the lowneſs of my ſpirits and the indolence of my habit; and I know not what might have been the conſequence, if I had not, at length, taken the reſolution to reviſit ſociety again. I am now moſt happily and comfortably placed as a partner in that very houſe, to which I once bade adieu, as I thought, for ever. I truſt I am now cured of a paſſion for retirement; but as I perceive many of my acquaintances liſtening to the repreſentations which once deceived me, I am deſirous, by your inſertion of this letter, to warn them againſt the error. Few men of any deſcription are qualified to enjoy retirement, or to render it ſalutary. Men of mere buſineſs are the leaſt of all ſo. Their habits, tempers, and talents, are all diſqualifications of an inſuperable kind. Active employments, connected with fair and honeſt advantages, may prolong their days in health and comfort; but to exchange buſtle for idleneſs, without the power to render idleneſs harmleſs, is a deſperate attempt; and it is extreme folly, at the decline of life, to barter that which may be depended upon for that which is uncertain in the higheſt poſſible degree.

I am, ſir, your humble ſervant,

THOMAS KERSEYMERE.

Strand, Dec. 26, 1794.

ILLUSTRATIONS OF ANCIENT MANNERS:

Concluded from Vol. XCV, Page 408.

IN purſuing this ſubject, we are often ſurpriſed at the coincidence of little circumſtances in the manners of ancient and modern times, and it will appear very ſtriking in the inſtance I am now to bring. Were one to read the following verſes without knowing whence they are taken, it would not be unnatural to ſuppoſe that ſome perſon had uſed the quaint language of our Bible tranſlation, to expreſs the little petty arts by which men of narrow and contracted minds evade the payment of juſt debts, and eſpecially thoſe which they have contracted in an emergency of diſtreſs, and which, conſequently, ought to be paid with the utmoſt regularity; 'Many, when a thing was lent them, reckoned it to be found, and put them to trouble that helped them. Till he hath received, he will kiſs a man's hand; and for his neighbour's money he will ſpeak ſubmiſſively; but when he ſhould repay, he will prolong the time, and return words of grief, and complain of the time. If he prevail, he ſhall hardly receive the half, and

he will count as if he had found it; if not, he hath deprived him of his money, and he hath gotten him an enemy without cauſe: he payeth him with curſings and railings; and for honour he will pay him diſgrace. Many, therefore, have refuſed to lend for other men's ill dealing, fearing to be defrauded. Yet have thou patience with a man in poor eſtate, and delay not to ſhow him mercy.'

There are few men more popular, as far as the circle of their acquaintance extends, than thoſe 'who give good dinners.' Such men are never without *friends* to grace their hoſpitality; and the oppoſite character is as much out of favour. If we know nothing of a man's wealth, probity, or talents, we are always ſure to be made acquainted with the properties of his table. The two reputations of liberality and ſordidneſs fly faſter than perhaps any others. 'Whoſo is liberal of his meat, men ſhall ſpeak well of him; and the report of his good houſe-keeping will be believed. But againſt him that is a niggard of his meat, the *whole city* ſhall murmur; and the teſtimonies of his niggardneſs ſhall not be doubted of.'

As a mere matter of curioſity, I may here take notice, that the old motto in ancient churchyards, '*hodie mihi, cras tibi*,' is nearly a Latin tranſlation from a verſe in Eccleſiaſticus, 'Remember my judgment; for thine alſo ſhall be ſo; yeſterday for me, and to-day for thee.'

That wiſdom is the attribute of men of learning is perhaps not juſt, if we are too nice in conſidering many of their actions; but that ſuch men only have the means of acquiring and extending wiſdom cannot be doubted. It is alſo as certain that perſons employed in buſineſſes of drudgery have neither the means, nor the taſte for intellectual improvement. What I am about to quote has, if I miſtake not, been lately applied to a political purpoſe. *My* buſineſs is only with the antiquity of manners, and the immortality, if I may uſe the expreſſion, of a juſt remark. If a remark or obſervation be once juſt, it never dies. 'The wiſdom of a learned man cometh by opportunity of leiſure: and he that hath little buſineſs, ſhall become wiſe. How can he get wiſdom that holdeth the plough, and that glorieth in the goad, that driveth oxen, and is occupied in their labours, and whoſe talk is of bullocks?' The whole of this chapter, the thirty-eighth, is worthy of peruſal. It is ſuppoſed, but unjuſtly, to favour deſpotic principles; it only diſtinguiſhes between the merits of cultivated and uncultivated minds to the happineſs of civil ſociety.

There are a ſet of beings in the world, who having ſome agreeable qualities of little value but in company, affect to deſpiſe every honeſt and induſtrious mode of earning a ſubſiſtence, and live by going from place to place, and from table to table, where they pay a certain quantity of flattery for a good dinner. Theſe are ſometimes called *danglers*, *bangers-on*, or *led-captains*, and ſometimes *toad-eaters*. Every good-natured gentleman, who keeps a plentiful table, receives frequent viſits from theſe free-booters; and, when they are once encouraged, it is not eaſy to get rid of them, without uſing methods more harſh than a meekly-diſpoſed mind reliſhes. They are above taking hints, and by no means over-nice in punctilios, ſo that a ſmall affront will not diſguſt them, and they are always much more inclined to pocket an inſult, than to reſent it. The former is eaſy; the latter they cannot ſo well afford. They are not, however, a new ſpecies of beings, the production of modern tables and modern idleneſs. Our author characterizes them with great juſtice and equal ſeverity: 'The life of him that dependeth on another man's table is not to be counted for a life; for he polluteth himſelf with other men's meat: but a wiſe man, well-nurtured, will beware thereof. Begging is ſweet in the mouth of the ſhameleſs.'

Theſe extracts may be extended by

the curious reader to a far greater length than it is propoſed to carry them in this paper. Enough, probably, has been ſaid to direct the reader's attention to this book, and to the Proverbs and Wiſdom of Solomon, two pieces in which the moſt admirable precepts are blended with remarks upon life and manners, which cannot fail to ſtrike an intelligent reader. We perceive how very near the reſemblance is between the manners of ancient and modern times, and how little we can boaſt of novelty in thoſe cuſtoms upon which we are moſt apt to pride ourſelves. We ſee that there is nothing in modern manners, either good or bad, nothing in the modes of active life, in the purſuit of buſineſs or of pleaſure, which can be termed new. Precedents may be found in ancient times for all the various modifications of human action, whether ariſing from ignorance, wickedneſs, or temper, or from the peculiarity of ſituation in life, with reſpect to rank or wealth. We ſee, too, how nearly the manners of ancient and modern ages approximate in the way of tranſacting buſineſs between men in trade; all the various caſes of fraud, diſhoneſty, debt, ſuretiſhip, bankruptcy, are recorded in one ſhape or other in the books above mentioned, and indeed, might be traced to a much higher ſource by any perſon who will read ancient books with an eye chiefly to the manners they occaſionally mention. Theſe are direct proofs of the exiſtence of ſuch manners, becauſe where a precept is given to avoid any folly or crime, it follows that ſuch folly or crime was then in exiſtence; and we may farther judge of its being common or uncommon, from the precept being more or leſs frequently repeated, or more or leſs ſtrengthened by various collateral conſiderations. A few hours may be very pleaſingly employed by peruſing the works quoted with this view.

From a peruſal of theſe works, and of the Greek and Roman author-s, we may be aſſured that there exiſted in the world, at the time of their original publication, a much higher degree of civilization in ſociety, than we ſhould be apt to ſuppoſe, were we to imagine that mankind had been in a ſtate of uninterrupted progreſſion from the creation to the preſent time. On the contrary, we know that civilization has been, as it were, travelling over the globe, and reſiding a greater or leſs portion of time in a nation, according to the operation of certain circumſtances. This may be underſtood by reflecting upon and comparing the ſtate of ancient Rome, in the days of her glory, proſperity and virtue, and in that of modern Rome, in her preſent effeminacy, darkneſs, and degeneracy. The flouriſhing cities of Greece may be reviewed with the ſame intention; and we may then inſpect the riſing ſtates in the new world. In the new world, the manners of the old do not go on in progreſſion; coloniſation is the birth of ſociety, and men live for a time as the firſt of mankind may be ſuppoſed to have lived, in a ſtate of infantive innocence. Hiſtory ſhows what are the cauſes that lead, in the caſe of nations, to either a premature, or a debauched old age. But manners, we ſee, are in certain reſpects the ſame in all. Poliſhed ſociety has its advantages; but all poliſhed ſocieties, every people who have acquired refinement, wealth, commercial or political importance, preſent the ſame manners, the ſame virtues and vices, follies and imperfections. In this reſpect, nothing can be more true than the ſaying of the wiſe man, 'Is there any thing whereof it may be ſaid, ſee this is *new*. It hath been already of old time.'

Kingdoms, or nations, have been compared with individuals. The compariſon is beautifully juſt, and it were to be wiſhed that the virtues of a nation could be as eaſily brought into action as thoſe of an individual. But imperfection hangs to all our actions when in a combination. The miſerable devaſtations of war, great and ex-

tended beyond all computation, have unqueſtionably retarded the fair progreſs of mankind in goodneſs and wiſdom. To the frequency of war, more than half the crimes of mankind are to be attributed, and the wickedneſs of war being handed down from generation to generation, receives certain modifications in its progreſs, and if it does not become a fixed ſyſtem, is at leaſt looked upon as a matter of neceſſity, and therefore looked upon with indifference.

It is much to be regretted that the wiſdom and goodneſs of the world have not kept pace with its age. If, as we are taught to believe, much will be expected of them to whom much is given, *we* cannot hear this repeated, and preſent the undaunted front of innocence. So much wiſdom and experience, ſuch copious ſupplies from hiſtory, precept, and example, and ſo little apparent advantage taken, affords matter of ſerious reflection. To the excellence of our poliſhed manners we cannot lay claim; they are none of ours; they have been of old time. To the invention of our ſplendid follies, and our low cunning, our faſhionable etiquette, and our petty frauds, we have yet a more feeble pretence; for they too derive their origin from nations once as poliſhed, as flouriſhing, as renowned as we.

Theſe circumſtances, however, obvious as they are, and I am afraid not admitting of contradiction, ought not to operate as diſcouragements. There is much good mixed with the evil; there is a *diſpoſition* to act wiſely and uprightly. If that be cultivated by thoſe to whom the cultivation of public virtue, and the direction of the public bias are entruſted, all will yet be well; and we ſhall eſcape the guilt of thoſe atrocious acts, which have brought diſgrace and ruin upon nations, and which now bid fair, unleſs Providence eſpecially interpoſe, to overthrow all that is valuable in ſociety, all that gladdens life, and makes man love his ſpecies and his God, in one undiſtinguiſhable maſs of corruption and diſorder.

TRAITS *of* MAGNANIMITY.

WHEN Aurelian beſieged queen Zenobia in Palmyra, enraged at the length of the ſiege, he ſent a letter to her, with a haughty ſummons to ſurrender, accompanied with menaces of death, if ſhe refuſed. To this letter ſhe returned the following noble anſwer, which was drawn up by the illuſtrious Longinus: 'Never was ſuch an unreaſonable demand propoſed, or ſuch rigorous terms offered by any but yourſelf. Remember, Aurelian, that, in war, whatever is done, ſhould be done by valour. You imperiouſly command me to ſurrender; but can you forget that Cleopatra rather choſe to die with the title of queen, than to live in any inferior dignity? We expect ſuccours from Perſia; the Saracens are arming in our cauſe; even the Syrian banditti have already defeated your army. Judge what you are to expect from a conjunction of theſe forces. You ſhall be compelled to abate that pride, with which, as if you were abſolute lord of the univerſe, you command me to become your captive.'—But the ſubſequent conduct of Zenobia was not correſpondent to this anſwer. When compelled to ſubmit, ſhe not only deſcended to entreat her life, but meanly to betray her counſellor Longinus; 'The letter that affronted Aurelian,' ſhe ſaid, 'was not her own: Longinus wrote it: the inſolence was his.'—Longinus was borne away to immediate execution. He pitied Zenobia, and comforted his friends. He conſidered death as a bleſſing, ſince it reſcued his body from ſlavery, and gave his ſoul the moſt deſirable freedom. 'This world,' ſaid he, with his expiring breath, 'is nothing but a priſon! Happy, therefore, is he, who leaves it ſooneſt, and obtains his liberty.'

METEOROLOGICAL JOURNAL, December 1794.

D.	H.	Baro.	T. out	T. in	Hyg.	C.	Wind.	Weather, &c.
1	8	29,70	48	54	58	5	W 1	hazy. wind S: little rain
	2	29,67	49,5	55	60	5	S 1	. fine. cloudy night
2	8	29,87	48	53	57	5	S 3	. little wet at times
	2	29,83	51,5	53,5	60	5	S 3	. little wet at times
3	8	29,83	54	57	60	4	SSW 3	. fine
	2	29,76	54	56	56,5	3	S 3	. cloudy. fine and leſs wind
4	8	29,67	49	54	60	2	S 1	: cloudy
	2	29,67	51	56	59	4	S 1	. fine. hazy eve
5	8	29,64	43	52,5	61	f	SE 0	. more bright and thin clouds
	2	29,65	49	54	62	3	SE 1.	hazy. foggy eve
6	8	29,83	47	53	63	f	SE 0	. fine: cloudy. fine
F	2	29,85	52	55	61	3	S 1	hazy. cloudy night
7	8	29,79	47	52,5	62	f	S 1	. thin clouds
	2	29,73	50	56	61	3	S 1	hazy: little rain
8	8	29,51	47	54.5	64	5	SSE 1	little rain: fine
	2	29,44	51	55,5	59	3	S 1	
9	8	29,59	48	52	58	3	S 1	. more wind and gentle rain: fine
	2	29,55	50	53,5	61	3	S 3	. cloudy. ſhowers
10	8	29,77	42,5	52,5	61	f	S 0	: fine but hazy
	2	29,87	43	53	59	3	SW 1	hazy. clear night and morning
11	8	30,14	35	48	58,5	f	W 1	. more bright and few clouds
	2	30,18	38,5	48	58,5	f	W 1	. cloudleſs night but hazy: little wet
12	8	30,19	40,5	47,5	59,5	f	SW 1	drizzling
	2	30,16	47	50	60	5	SSW 1	hazy: fine
13	8	30,12	42	49,5	58,5	3	S 1	hazy
	2	30,11	44	50	56	3	SSE 1	: little wet
14	8	30,11	42	49	59	5	SSE 1	drizzling. very thick upward: rain
	2	30,08	42	50	60	5	S 1	continual gentle rain
15	8	30,13	39	47	58	f	SSE 1	. more foggy: very thick fog
	2	30,16	48,5	49	61	f	SSE 1	very thick fog. leſs fog at night: clear
16	8	30,35	33	44,5	59	f	NW 1	
	2	30,40	38,5	45,5	62	3	NNW 1	foggy. thick upward at night
17	8	30,36	36,5	45	59	f	W 1	. leſs foggy and few clouds
	2	30,26	38,5	46	61,5	3	W 1	foggy. clear eve
18	8	30,14	32	43	60	f	SSW 1	. fine
	2	30,06	36	45	60	3	S 1	hazy. cloudleſs night but foggy
19	8	29,94	33	43	60	f	SE 1	. fine
	2	29,90	38	43,5	59	1	SE 1	hazy. clear night
20	8	29,91	34	40	58	0	SE 2	
	2	29,93	36	45	56	1	ESE 2	
21	8	29,93	29	40,5	59	2	E 1	
	2	29,87	34	41	58	3	SE 1	
22	8	29,70	31	39,5	60	5	E 1	
N	2	29,63	34	40,5	61	5	E 2	hazy
23	8	29,66	38	42,5	63,5	f	E 1	
	2	29,70	40,5	43,5	62	5	E 1	. windy night
24	8	29,79	31	39	53	4	ENE 4	
	2	29,79	30,5	39	54,5	3	NE 3	. more cloudy
25	8	29,59	28	38	58	5	N 2	chiefly ſnow but fine at times
	2	29,53	31,5	39	57,5	3	N 1	. cloudy. ſnowy night
26	8	29,46	29	37,5	60	5	N 1	continual ſmall ſnow
	2	29,51	33,5	39,5	64	5	N 1	chiefly ſmall ſnow: fair
27	8	29,66	33	39	65	f	E 1	: little rain
	2	29,85	36	40	66	5	NNE 1	chiefly gentle rain
28	8	30,12	36	40	65	5	NE 1	little rain
	2	30,12	38,5	42	61	5	NE 1	
29	8	30,18	34,5	40,5	58,5	f	NNE 1	
	2	30,20	37	43	57	h	NNE 1	
30	8	30,13	35	44,5	60	f	NW 1	
	2	30,11	36,5	44,5	60	h	WNW 1	. fine night
31	8	30,00	30	40,5	65	f	WNW 1	. few clouds but hazy
	2	30,07	33,5	42	58	h	NNW 1	. foggy eve

Greateſt, Leaſt, and Mean State of the BAROMETER, THERMOMETER, *and* HYGROMETER, *in the Year* 1794.

1794	Barometer.			Thermometer out.			Thermometer in.			Hygrometer.		
	Great.	Leaſt	Mean	Great.	Leaſt	Mean	Great.	Leaſt	Mean	Great.	Leaſt	Mean
Jan.	30,50	28,57	29,93	51	25	36,5	52	40	44,5	71	46	56,5
Feb.	30,22	29,42	29,83	55	38	48	58	47	52,5	66	50	58,5
Mar.	30,38	29,52	29,96	55	37	47	56,5	48	52,5	71	50	58
Apr.	30,37	28,93	29,87	72	40	53	66	51	56,5	62	37	51
May	30,52	29,44	29,93	69	44	56	64	51	57	63	36	48
June	30,28	29,62	29,98	77	47	62	71	55	63	58	42	51
July	30,29	29,45	29,78	81,5	60	64	75,5	64	69	53,5	40,5	48
Aug.	30,22	29,51	29,85	75	51,5	60	71	52	65	62	43	51
Sept.	30,30	29,21	29,81	68	39	57,5	67	51	62	62,5	45	54,5
Oct.	30,29	29,19	29,90	64	37	51,5	63,5	51	57,5	63	51	56
Nov.	30,14	29,04	29,69	56,5	32,5	46,5	58	42	52,5	66	50	59
Dec.	30,40	29,44	29,89	54	28	40	57	37,5	47	66	56	60
Whole Year.	30,52	28,57	29,95	81,5	25	52	75,5	37,5	56,	71	37	54,5

OBSERVATIONS *on the* DISEASES *in* December 1794.

TYPHUS fever ſtill continued to prevail; the ſymptoms were various; ſometimes attended with *angina* and ulcerations of the fauces, and at others with *petechiæ*, as well as eruptions on the ſurface of the body; under all its ſymptoms the danger was increaſed, and many died about the fourteenth day, particularly where the diſeaſe was neglected at its commencement; delirium came on about the ſeventh day, was very conſiderable, and almoſt without any intermiſſion; the urine and feces, during its continuance, paſſed involuntarily, the latter very fetid and in general of a dark brown colour; the eyes were frequently red and ſomewhat inflamed, evidently denoting a great determination to the brain, and the pulſe feeble and extremely frequent; the patient was frequently prepoſſeſſed with the idea of dying at the firſt attack, which certainly increaſed the danger: the ſame remedies as before were perſiſted in, ſuch as bliſters, acids, &c. now and then the application of leeches to the temples proved ſerviceable, and fomenting the feet and legs with warm vinegar mixed with water, leſſened the delirium and ſometimes procured eaſy ſleep. This diſeaſe became leſs frequent at the latter part of the month, and ſhould the cold weather continue, it is probable that the ſtate of the atmoſphere will be ſo much changed as to put an end to it. No other diſeaſe deſerving notice occurred; aſthma was met with, but not more than is uſual at this ſeaſon of the year.

SELECT PASSAGES FROM SHAKSPEARE.

NUMBER XXV.

KING HENRY IV, PART II.

Rumour.

Rumour.

OPEN your ears; for which of you will ſtop
The vent of hearing when loud Rumour ſpeaks?
I, from the orient to the drooping weſt,
Making the wind my poſt-horſe, ſtill unfold
The acts commenced on this ball of earth.
Upon my tongues continual ſlanders ride;
The which in every language I pronounce,
Stuffing the ears of men with falſe reports.
I ſpeak of peace, while covert enmity,
Under the ſmile of ſafety, wounds the world:
And who but Rumour, who but only I,
Make fearful muſters and prepar'd defence;
Whilſt the big year, ſwoll'n with ſome other grief,
Is thought with child by the ſtern tyrant War,
And no ſuch matter? Rumour is a pipe
Blown by ſurmiſes, jealouſies, conjectures;
And of ſo eaſy and ſo plain a ſtop,
That the blunt monſter with uncounted heads,
The ſtill-diſcordant wavering multitude,
Can play upon it.

This is part of the ſpeech of Rumour, whom Shakſpeare has here introduced, painted full of tongues, and delivering an induction or kind of prologue. This perſonage he probably drew from Hollinſhed's Deſcription of a Pageant, exhibited in the court of king Henry VIII, with uncommon coſt and magnificence: 'There entered,' ſays the hiſtorian, 'a perſon called *Report*, apparelled in crimſon ſattin, *full of toongs*, or chronicles.' This, however, might be the common way of repreſenting this perſonage in maſques, which were frequent in his own times. Or, our poet, in his deſcription of Rumour, might have in view, either Virgil's celebrated deſcription of Fame, *Monſtrum horrendum*, &c. in the fourth book of the Æneid, or Ovid's deſcription of her cave, *Atria turba tenent*, &c. in the twelfth book of his Metamorphoſes. But the reader will judge for himſelf by a tranſlation of part of each:

A monſtrous phantom, horrible and vaſt;
As many plumes as raiſe her lofty flight,
So many piercing eyes enlarge her ſight:
Millions of opening mouths to Fame belong,
And every mouth is furniſh'd with a tongue,
And round with liſt'ning ears the flying plague is hung.
She fills the peaceful univerſe with cries:
No ſlumbers ever cloſe her wakeful eyes.
By day, from lofty tow'rs her head ſhe ſhews,
And ſpreads thro' trembling crowds diſaſtrous news.
With court informers haunts, and royal ſpies;
Things done relates, not done ſhe feigns and mingles truth with lies.

DRYDEN.

Hither in crowds the vulgar come and go;
Millions of rumours here fly to and fro;
Lies mixt with truth, reports that vary ſtill,
The itching ears of folks unguarded fill:
They tell the tale; the tale in telling grows,
And each relator adds to what he knows.
Raſh Error, light Credulity are here,
And cauſeleſs tranſport, and ill grounded fear;
New rais'd ſedition, ceaſeleſs whiſpers blown
By nameleſs authors, and of things unknown.
Fame all that's done in earth, heav'n, ocean, views,
And o'er the world ſtill hunts around for news.

GARTH.

Contention.

Northumberland. What news, lord Bardolph? Every minute now
Should be the father of ſome ſtratagem.
The times are wild. Contention, like a horſe

Full of high feeding, madly hath broke loo'e,
And bears down all before him.

Few paſſages can be ſelected from any poet that has ſtudied the hiſtory of mankind, in which the application is more obvious than this. Indeed, in great part of Europe, the preſent 'times,' are ſo 'wild' (though Shakſpeare ſpeaks only of civil war) as to preclude the neceſſity of any further annotation.

Misfortune ſuſpected.

Morton. Douglas is living, and your brother, yet:
But, for my lord your ſon—
Northumberland. Why, he is dead.
See, what a ready tongue ſuſpicion hath!
He, that but fears the thing he would not know,
Hath, by inſtinct, knowledge from others' eyes,
That what he fear'd is chanced. Yet ſpeak, Morton;
Tell thou thy earl, his divination lies;
And I will take it as a ſweet diſgrace,
And make thee rich for doing me ſuch wrong.
Morton. You are too great to be by me gain ſaid:
Your ſpirit is too true, your fears too certain.
Lord Bardolph. Yet, for all this, ſay not that Percy's dead.
Northumberland. I ſee a ſtrange confeſſion in thine eye:
Thou ſhak'ſt thy head, and hold'ſt it fear* or ſin
To ſpeak a truth. If he be ſlain, ſay ſo:
The tongue offends not, that reports his death:
And he doth ſin, that doth belie the dead;
Not he, which ſays the dead is not alive.
Yet the firſt bringer of unwelcome news
Hath but a loſing office; and his tongue
Sounds ever after as a ſullen bell,
Remember'd knolling a departing friend.

The quick eye of ſuſpicion, and the prophetical nature of anxious apprehenſions, are well marked in Northumberland's firſt ſpeech to Morton; and nothing can be more true in nature than the obſervation in the concluſion of his ſecond ſpeech to the ſame. Æſchylus has a ſimilar remark:

Alas! the bringer of unwelcome news
Hath but an evil and unwelcome office.

And Sophocles:

Th' ingrateful taſk of bringing evil news
Is ever odious.

But our author, in king John, has gone further ſtill, and made the meſſenger of misfortune an object of horror and deteſtation. Conſtance, upon receiving from Saliſbury a confirmation of ſome ill news, conceives a very natural, though unreaſonable idea, and thus exclaims:

Fellow, be gone, I cannot brook thy ſight—
This news hath made thee a moſt ugly man.

Diſtraction of a Father on the Loſs of his Son.

Northumberland. For this I ſhall have time enough to mourn.
In poiſon there is phyſic; and theſe news,
Having been well, that would have made me ſick,
Being ſick, have in ſome meaſure made me well:
And as the wretch, whoſe fever-weaken'd joints,
Like ſtrengthleſs hinges, buckle under life,
Impatient of his fit, breaks like a fire
Out of his keeper's arms; even ſo my limbs,
Weaken'd with grief†, being now enraged with grief,
Are thrice themſelves: hence, therefore, thou nice crutch;
A ſcaly gauntlet now, with joints of ſteel,
Muſt glove this hand: and hence, thou ſickly quoif;
Thou art a guard too wanton for the head,
Which princes, fleſh'd with conqueſt, aim to hit.
Now bind my brows with iron; and approach
The ragged'ſt hour that time and ſpight dare bring,

* *Fear* is here uſed for Danger.
† Grief, in ancient language, ſignifies *bodily pain* as well as *ſorrow*.

To frown upon the enraged Northumberland!
Let heaven kiſs earth! Now let not Nature's hand
Keep the wild flood confined! Let order die!
And let this world no longer be a ſtage,
To feed contention in a lingering act;
But let one ſpirit of the firſt-born Cain
Reign in all boſoms, that each heart being ſet
On bloody courſes, the rude ſcene may end,
And darkneſs be the burier of the dead.

In the firſt part of this noble ſpeech, we cannot but obſerve, that the human mind, when rouſed by danger, or inflamed with paſſion, is capable of inſpiring the brave heart with additional courage, and ſupplying new vigour to exhauſted ſtrength. This admirable economy in the human frame is contrived by nature, as being neceſſary to ſelf-defence, as well as in order to render injury more difficult and hazardous to the offender.—The concluſion too is very ſtriking: it exhibits that extravagance of deſpair and rage to which grief, reſentment, and misfortune are apt to drive a perſon, whoſe mind is not happily tempered by philoſophy, or reſtrained by religion. Mr. Smith, the tranſlator of Longinus, in illuſtrating his fifteenth ſection, which treats of noble and terrible images, quotes this concluſion as a further example: 'How vehemently,' ſays he, 'does the fury of Northumberland exert itſelf in Shakſpeare, when he hears of the death of his ſon Hotſpur! The rage and diſtraction of the ſurviving father ſhew how important the ſon was in his opinion. Nothing muſt be, now he is not. Nature itſelf muſt fall with Percy. His grief renders him frantic, his anger deſperate.'

A Medical Anecdote.

Falſtaff. Sirrah, you giant, what ſays the doctor to my water?

Page. He ſaid, ſir, the water itſelf was a good healthy water; but, for the party that owed [*owned*] it, he might have more diſeaſes than he knew for.

This method of inveſtigating diſeaſes was once ſo much the faſhion, that Linacre, the founder of the college of phyſicians, formed a ſtatute to reſtrain apothecaries from carrying the water of their patients to a doctor, and afterward giving medicines in conſequence of the opinions they received concerning it. This ſtatute was followed, ſoon after, by another, which forbade the doctors themſelves to pronounce on any diſorder, from ſuch an uncertain diagnoſtic.

'It will ſcarcely be believed, hereafter,' ſays Mr. Malone, 'that in the years 1775 and 1776, a German, who had been a ſervant in a public riding-ſchool (from which he was diſcharged for inſufficiency) revived this exploded practice of *water-caſting*. After he had amply increaſed the bills of mortality, and been hung up to the ridicule of thoſe who had too much ſenſe to conſult him, as a monument of the folly of his patients, he retired with a princely fortune, and perhaps is now indulging a hearty laugh at the expence of Engliſh credulity.'—To this anecdote we may add, that the perſon in queſtion has not *retired*, but is ſtill in great practice. He has, indeed, acquired a princely fortune, and has an elegant villa weſt of the metropolis. To this villa (as if to form the moſt ludicrous contraſt imaginable) *the noted Water Doctor* occaſionally retires from the fatigues of practice, and in this villa reſided and expired—*the immortal Defender of Gibraltar.*

Caution to Builders.

Lord Bardolph. When we mean to build,
We firſt ſurvey the plot, then draw the model;
And when we ſee the figure of the houſe,
Then muſt we rate the coſt of the erection;
Which if we find outweighs ability,
What do we then, but draw anew the model;
Conſent upon a ſure foundation;
Queſtion ſurveyors; know our own eſtate,
How able ſuch a work to undergo—
For he, that draws the model of a houſe

Beyond his power to build it, *will* half through
Give o'er, and *leave* his part-created coſt
A naked ſubject to the weeping clouds,
And waſte for churliſh Winter's tyranny.

This advice will be deemed replete with wiſdom by all that have had an opportunity of obſerving the ſplendid fortunes diſſipated, and reſpectable families ruined, by a thoughtleſs and improvident expenditure in building. Nor ought the lower claſſes in life to be inattentive to it; for it is not neceſſary to quit the envions of the metropolis, to ſee, in reality, the dreary picture in the two concluding lines.

Fickleneſs of the Vulgar.

Archbiſhop. An habitation giddy and unſure
Hath he, that buildeth on the vulgar heart.
O thou fond many, with what loud applauſe
Did thou beat heaven with bleſſing Bolingbroke,
Before he was what thou wouldſt have him be!
And being now trimm'd in thine own deſires,
Thou, beaſtly feeder, art ſo full of him,
That thou provok'ſt thyſelf to caſt him up.
——What truſt is in theſe times?
They that, when Richard liv'd, would have him die,
Are now become enamour'd on his grave.

This is a very diſguſting picture, but hiſtorically juſt, of the fluctuating affections of the multitude. Shakſpeare, indeed, has many paſſages on the certainty of popular favour. Thus, in Coriolanus, that hero thus addreſſes the mutinous citizens:

What would ye have, ye curs—
——————You are no ſurer, no,
Than is the coal of fire upon the ice,
Or hailſtone in the ſun.——————
——————He that depends
Upon your favour, ſwims with fins of lead,
And hews down oaks with ruſhes, Hang ye—truſt ye!
With every minute you do change a mind,
And call him noble that was now your hate;
Him vile, that was your garland.

It ſhould be recollected, however, that even the vulgar do not always deſert their favourite without reaſon. No popularity can be permanent that has not been acquired by virtue, and preſerved by perſeverance in it.

An amiable Trait of Character.

Poins. How ill it follows, after you have laboured ſo hard, you ſhould talk ſo idly! Tell me, how many good young princes would do ſo, their fathers being ſo ſick as yours at this time is?

Prince of Wales. Shall I tell thee one thing, Poins?

Poins. Yes; and let it be an excellent good thing.

Prince. It ſhall ſerve among wits of no higher breeding than thine.

Poins. Go to; I ſtand the puſh of your one thing that you will tell.

Prince. Why, I tell thee: it is not meet that I ſhould be ſad, now my father is ſick; albeit I could tell to thee (as to one it pleaſes me, for fault of a better, to call my friend) I could be ſad, and ſad indeed too.

Poins. Very hardly, upon ſuch a ſubject.

Prince. By this hand, thou think'ſt me as far in the devil's book as thou and Falſtaff, for obduracy and perſiſtency. Let the end try the man. But I tell thee—my heart bleeds inwardly, that my father is ſo ſick; and keeping ſuch vile company as thou art, hath in reaſon taken from me all oſtentation* of ſorrow.

Poins. The reaſon?

Prince. What would'ſt thou think of me, if I ſhould weep?

Poins. I would think thee a moſt princely hypocrite.

Prince. It would be every man's thought; and thou art a bleſſed fellow, to think as every man thinks. Never a man's thought in the world keeps the road-way better than thine. Every man would think me an hypocrite, indeed: and what accites your worſhipful thought to think ſo?

Poins. Why, becauſe you have been ſo lewd, and ſo much engrafted to Falſtaff.

Prince. And to thee.

This ſcene exhibits a beautiful trait in the character of the prince of Wales, who is made to preſerve his good principles untainted, amid all his ſcenes

* Oſtentation of ſorrow is here not *boaſtful ſhew*, but ſimply *ſhew*.

of diſſipation. The delicacy of his difficulty on this occaſion, in not being able to manifeſt the concern he truly felt for the illneſs of his father, leſt, from the *former* complexion of his life and manners, he might be ſuſpected of inſincerity in ſuch profeſſions, muſt have a fine effect on the ſentiment of a reader who is poſſeſſed of the leaſt refinement of virtue.

"A moſt uſeful leſſon," ſays Mrs. Griffith, "might be framed, upon the very ſingular character of this amiable perſon. The pattern is not perfect; and, therefore, (ſhall I venture to ſay it?) the example is the better, for that reaſon. His manners are idle, but his morals uncorrupt. He ſuffers Falſtaff to make as free with him as he pleaſes, but breaks his head, as Mrs. Quickly tells us, in a former ſcene, for his having thrown out a jeſt upon his father. Young men may learn from him, never to be guilty of more vice, than the temptation to it might precipitate them into. He connives at the robbery of his companions, for the diverſion of playing the ſame game upon them again, but reſolves to make ample reſtitution for the wrong. He offends his father by the diſſoluteneſs of his conduct; but his filial affection and reſpect are ſtill unremitted toward him. He ſhews a ſpirit of juſtice in injuſtice, and of duty even in diſobedience." This part of the prince's character has been likewiſe conſidered by Dr. Johnſon: "The prince," ſays he, "who is the hero both of the tragic and comic part, is a young man of great abilities and violent paſſions; whoſe ſentiments are right, though his actions are wrong; whoſe virtues are obſcured by negligence, and whoſe underſtanding is diſſipated by levity. In his idle hours he is rather looſe than wicked; and when the occaſion forces out his latent qualities, he is great without effort, and brave without tumult. The trifler is transformed into a hero, and the hero again repoſes in the trifler. This character is great, original, and juſt."

That this character is original and juſt is certain, becauſe it is the faithful delineation of what has actually exiſted; but that it merits ardent commendation, or ſhould be exhibited as an example, cannot be ſo eaſily allowed. It requires a greater degree of refinement and acuteneſs than falls to the lot of ordinary minds, to mark the delicate boundaries between *idle* or diſſolute *manners* and *uncorrupt morals*, between *looſeneſs* and *wickedneſs*; to ſettle the exact quantum of vice of which a young man may be guilty; or to explain the compatibility of *juſtice* with *injuſtice*, of *duty* with *diſobedience*. The reformation of our heroic Henry the fifth was, indeed, an illuſtrious event; but as an example, it ought ever to be quoted with caution. Sir William Blackſtone having mentioned that George Nevile, duke of Bedford, was degraded from the peerage, by act of parliament, on account of his poverty, which rendered him unable to ſupport his dignity, adds, "but this is a ſingular inſtance; which ſerves, at the ſame time, by having happened, to ſhew the power of parliament; and, by having happened *but once*, to ſhew how tender the parliament hath been, in exerting ſo high a power." * In like manner, the example of Henry the fifth is a *ſolitary* one; which ſerves, at the ſame time, by having happened, to ſhew the *poſſibility* of ſuch a reformation, and, by having happened *but once*, to ſhew the extreme danger of truſting to it. It has been already obſerved, that nothing is more productive of dangerous conſequences in life, than the method taken of diſguiſing the nature of vice, in its various branches, by the uſe of *palliating phraſes*. † Under whatever form and of whatever degree, vice may be purſued, its influence, in its very nature, is contaminating, degrading, embruting; and the thoughtleſs youth

* Commentaries, Book I. ch. 12. † See No. XXIV, Vol. XCV, Page 179.

too often terminates his career in irretrievable deſtruction. Memorable, as an inſtance, will be the recent hiſtory of a virtuous and beneficent monarch, who loſt his kingdom and his life, through the boundleſs extravagance and abandoned profligacy of his brothers, who appear themſelves to be now condemned to perpetual exile, the objects of univerſal contempt.—But on this ſubject, we have been anticipated, in a manner, by Dr. Knox, who, in one of his Eſſays, has the following excellent remarks:

'There are thoſe who conſider early profligacy as a mark of that ſpirit, which ſeldom fails to produce, in the ſubſequent periods of life, a wiſe and a virtuous character. The example of Henry the fifth is often cited in confirmation of their opinion. Shakſpeare has indeed repreſented his errors and reformation in ſo amiable a light, that many are not diſpleaſed when they ſee a young man beginning his career in riot and debauchery. While there is an appearance of ſpirit, they regard not the vice.

'The example of Henry the fifth has been applied particularly to heirs-apparent of a crown. If the future king is found to be early initiated in the exceſſes of ſenſuality, it is a favourable preſage, and we are referred to the example of Falſtaff's Hal. If he devote his time to drinking, and be actually involved in continual intoxication, it is all the better, for do we not recollect Hal's exploits at the Boar's Head, in Eaſtcheap? Dame Quickly, Doll Tearſheet, are illuſtrious inſtances to prove what company a prince ſhould keep, in order to become hereafter a great king. It is in the haunts of intemperance and vice, and in the company of ſycophants and knaves, that he is, according to the vulgar phraſe, to ſow his wild oats, to ſpend the exuberance of his ſpirit, to ſubdue the ebullition of his blood, and to acquire a valuable ſpecies of moral experience.

'It is true, indeed, that Henry the fifth is a remarkable inſtance of early profligacy and ſubſequent reformation. He is a remarkable, becauſe he is a rare inſtance. For one who ſucceeds as he did, a thouſand become either incurable debauchees, drunkards, and rogues; ruin their character and fortunes; or die under the operation of ſo rough an experiment. We hear not of thoſe who are obliged to go to the Eaſt Indies, to hide themſelves on the Continent, to ſkulk in the garrets of blind alleys, to ſpend their days in gaols, or are early carried to the churchyard, amid the thanks and rejoicings of their friends for ſo happy a deliverance from ſhame and ruin. But if one wild youth becomes but a tolerably good man, we are ſtruck with the metamorphoſis, as we are with every thing uncommon. We exaggerate his goodneſs, by comparing it with his previous depravity. We cite the example, as a conſolatory topic, wherever we behold a young man, as the ſcripture beautifully expreſſes it, walking in the ways of his own heart, and in the ſight of his own eyes. We talk as if we almoſt congratulated a parent, when his ſon has ſpirit enough to violate, not only the rules of decency, but alſo the moſt ſacred laws of morality and religion.'

Servile Adulation.

Lady Percy. He was, indeed, the glaſs,
Wherein the noble youth did dreſs themſelves.
He had no legs, that practiſed not his gait:
And ſpeaking thick, which Nature made his blemiſh,
Became the accents of the valiant;
For thoſe that could ſpeak low, and tardily,
Would turn their own perfection to abuſe,
To ſeem like him: ſo that, in ſpeech, in gait,
In diet, in affections of delight,
In military rules, humours of blood,
He was the mark and glaſs, copy and book,
That faſhioned others.

The ſervile adulation that has been too often paid to great and diſtinguiſhed perſons, even to an imitation of their very defects (and which Alex-

ander the Great very properly reprehended, by giving a box on the ear to one of his courtiers, who had mimicked the wryneſs of his neck) is admirably repreſented in this part of lady Percy's character of her heroic ſon.

[To be continued.]

ON THE ART OF ENGRAVING.

Written in Italy, by the late Sir Robert Strange.

WHEN we look back into antiquity, and form to our imagination an idea of that perfection, to which the Greeks and Romans carried the fine arts, we cannot but lament that they were ſtrangers to that of engraving. The refinement of their taſte, the purity and ſimplicity of their conceptions, and the care which they took, by their works, to tranſmit their reputations to poſterity, leave it beyond a doubt, that this art would have met with their encouragement and protection; as it is the moſt ſecure depoſitory, for after ages, of whatever is truly great, elegant, or beautiful.

It was about the year 1460, that engraving was invented. I ſhall paſs over its early period, which I may have an opportunity of conſidering, on ſome future occaſion. No ſooner had this art appeared, than it attracted general attention. All the great painters adopted it, with a view of multiplying their works, and of tranſmitting them with greater certainty to poſterity. Albert Durer, and Andrea Mantegna, two of the greateſt painters of that age, practiſed the art of engraving, and have left us a variety of elegant compoſitions. Theſe early productions of the art drew, by their novelty and excellence, the admiration of all Italy. Raphael himſelf, that prince of painters, was particularly charmed with the works of Albert Durer; and, in return for ſome prints he had received from him, ſent him a preſent of his own portrait, painted by himſelf.

Marc Antonio, who, by ſtudying Albert Durer's works, had improved the art of engraving, was among the firſt who carried it to Rome, when the genius of the divine Raphael preſided over the Roman ſchool. Thoſe who are converſant in the fine arts know, how much this painter encouraged engraving in Marc Antonio, his ingenious pupil. Examine that engraver's works, and you will find evident proofs of it, ſo much does he breathe, in his fineſt prints, the ſpirit of his ſublime author. Other painters of the Roman ſchool, as well as Parmigiano, Salvator Roſa, &c. have tranſmitted to us many fine compoſitions in this art.

The Bologneſe ſchool furniſhes more recent examples. Annibale and Agoſtino Caracci gave the lead. Agoſtino, although one of the greateſt painters that Italy ever produced, exerciſed the art of engraving in preference to that of painting; and has thereby eſtabliſhed to himſelf, and ſecured to others, a reputation to the lateſt poſterity. Guido, Guercino, Simon Cantarini da Peſaro, the Siranis, &c. have all of them left us many elegant prints, which are ſo many ſtriking proofs of their having cultivated the art of engraving.

To ſee it ſtill in a higher degree of perfection, let us examine it when the ſchool of Rubens preſided in Flanders. Here we ſhall find, that this great painter was no leſs intent upon cultivating this art, than that of painting; conſcious that, by this means, he not only diffuſed his reputation, but ſecured it to ſucceeding generations. Bolſwert, Pontius, Voſterman, &c. were the companions of his and of Vandyck's leiſure hours. They eſteemed one another; they lived together as friends and equals; and, to uſe the words of a late ingenious writer, '*Sous leurs heureuſes mains le cuivre*

The PRINCESS CAROLINE of BRUNSWIC,

Intended PRINCESS of WALES.

Universal Magazine, Jany 1795.

dent or. Under their hands copper became gold.' The works of thoſe engravers, which are now ſold at the price of pictures, are evident proofs of the honourable ſtate of the arts in thoſe days.

What numberleſs examples do have not Rembrandt, Bergham, Oſtade, and others of the Dutch maſters, left us of their deſire to cultivate engraving? Have not the works of the former, which are now ſold at moſt amazing prices, tranſmitted a reputation both to himſelf and to his country, which time can never obliterate; the Bloemarts, the Viſchers, and others, were certainly ornaments to the age in which they lived.

During the reign of Lewis the fourteenth, what a number of great artiſts appeared in this profeſſion, and did honour to France! The names of Gerard, Andran, Edelink, Poilly, &c. will be laſting ornaments to that kingdom. That magnificent prince frequently amuſed himſelf in this way; and ſo charmed was he with the works of the ingenious Edelink, that he conferred upon him the honour of knighthood. It has been owing ſolely to the honourable rank given to this art, by the royal academy of painting at Paris, that it has been cheriſhed and cultivated to ſuch a degree of excellence, that, for a century paſt, Paris has been the depoſitory of the fineſt productions in this way; and theſe have been the ſource of incredible riches to France.

Let us, in the laſt place, follow this art into Great Britain.

Queen Anne, whoſe reign has been generally called the Auguſtan age of this country, was deſirous of tranſmitting to poſterity the Cartoons of Raphael, which had been purchaſed by her grandfather, Charles the firſt. With this view ſhe ſent for Dorigny, the engraver, as this art was then but little cultivated in Britain. The reception he met with from the queen is well known. She honoured him with an apartment in the royal palace of Hampton court, viſited him from time to time, countenanced him on all occaſions, and was the patroneſs of his undertaking.

After her death, king George the firſt imitated the example of Anne; and, upon Dorigny's having completed his engravings, not only made him a very conſiderable preſent, but conferred upon him the honour of knighthood. From the departure of this artiſt, who executed a work which will reflect laſting honour on Britain, the art of engraving again relapſed into its former obſcurity, till toward the middle of this century; when it was revived afreſh, by the introduction of other foreigners, together with the ſucceſsful endeavours of ſeveral ingenious natives of theſe kingdoms.

An Account of the illuſtrious Family of BRUNSWIC: *With a ſtriking Likeneſs of the Princeſs* CAROLINE AMELIA ELISABETH, *intended Princeſs of* Wales, *engraved by* Tookey, *from a Print by* Schröder *of* Brunſwic.

THE duchy of Brunſwic is ſituated in the circle of Lower Saxony, in Germany. In its moſt extenſive ſenſe, it includes the duchy of Hanover, the principality of Grubenhagen, and the counties of Blackenburg and Rheinſtein. But in this compaſs is included, not only the duchy of Brunſwic-Lunenburg, which belongs to the king of Great Britain, elector of Hanover, but the duchy of Brunſwic-Woltenbuttle, whoſe ſovereign is the celebrated Charles William Ferdinand, a general in the Pruſſian army, born October 9, 1735, and married January 16, 1764, to the princeſs Auguſta, daughter of the late Frederic prince of Wales.

The princes of theſe two illuſtrious houſes are deſcended from Erneſt duke

of Lunenburg and Zell, who died in 1546; the Wolfenbuttle branch from Henry the eldeſt ſon, and the electoral houſe of Hanover from William the youngeſt. But notwithſtanding the preſent diſtinction of Brunſwic-Lunenburg and Brunſwic-Wolfenbuttle, the title of *Brunſwic and Lunenburg* is common to both, on account, as obſerved above, of their being deſcended from the ſame family.

His ſerene highneſs Charles duke of Brunſwic, has four ſons and two daughters, by the illuſtrious ſiſter of our ſovereign; namely, 1. Auguſta Carolina Frederica Louiſa, born Dec. 3, 1764; 2. Charles George Auguſtus, born Feb. 8, 1766; 3. Carolina Amelia Eliſabeth (the intended conſort of the prince of Wales) born May 17, 1768; 4. George William Chriſtian, born June 27, 1769; 5. Auguſtus, born Auguſt 8, 1770; 6. William Frederic, born Oct. 9, 1771.

On the 22d of November 1794, his majeſty was pleaſed, by commiſſion under the great ſeal of Great Britain, to appoint the right hon. James lord Malmſbury, 'to negotiate, conclude, and ſign a treaty of marriage between his royal highneſs the prince of Wales and the princeſs Caroline Amelia Eliſabeth, daughter to the moſt illuſtrious highneſs, the duke of Brunſwic and Lunenburg.'—His lordſhip proceeded, accordingly, to Brunſwic; on the 5th of December he made his public entry into that city, and demanded the princeſs Caroline in marriage. The princeſs, afterward, received the compliments of the court on the occaſion. The treaty of marriage was ſent to the court of London, and was ſent back on the 16th finally ratified. A ſmall ſquadron of frigates, commanded by commodore Payne, having on board lady Jerſey, and other attendants, belonging to the houſehold of her highneſs, ſailed from Sheerneſs, in order to convoy the royal yacht. The inclemency of the weather, however, obliged the commodore to put back to Sheerneſs. The princeſs had been expected in England, in the early part of this month, and actually left Brunſwic, accompanied by the ducheſs her mother, and attended by a great retinue, amid the tears—the acclamations of the populace. On their arrival at Piena, the ducheſs was taken ill, but ſoon recovered, ſo as to be able to proceed to the palace of Herrenhauſen, near Hanover, where they dined. On the 30th, they arrived, by eaſy ſtages, at Oſnaburg, where the epiſcopal palace had been prepared for their reception. They afterward proceeded beyond Deventer, when an expreſs arrived from Hague, with an account of the alarming progreſs of the French, and to deſire the royal travellers would return immediately to Brunſwic. We ſhall be happy in being able ſoon to announce, that the journey has been reſumed, and ſtill happier, that the illuſtrious and long-expected princeſs has ſafely arrived in this country.

The portrait annexed is engraved from a print by Schroeder, which is eſteemed a very ſtriking likeneſs at Brunſwic. It has the following inſcription: 'Caroline Amelia Eliſabeth, Ducheſſe de Bronſvic-Luneburg, Doyenne du Chapitre Imperiale de Quedlinburg; dedié a ſon Alteſſe Reverendiſſime et Sereniſſime Madame Auguſte Dorothée, Abbeſſe de Gandersheim et Prevôte de Quedlinburg, Ducheſs de Bronſwic-Luneburg—Caroline Amelia Eliſabeth, Ducheſs * of Brunſwic-Lunenburg, *Deaneſs* of the Imperial Chapter of Quedlinburg; dedicated to her moſt reverend and moſt Serene Highneſs, Madame Auguſta Dorothea Abbeſs of Gandersheim, and Provoſt of Quedlinburg, Ducheſs of Brunſwic-Lunenburg.'

* In Germany, all the ſons and daughters of a duke and ducheſs are dukes and ducheſſes as well as their parents; which is the ſame alſo with inferior titles.

UNIVERSALITY OF THE LOVE OF FAME.

Etiam ſapientibus, cupido gloriæ, noviſſima exuitur. TACITUS.

'Fame is the laſt garment which even wiſe men put off.'

WHEN we obſerve a principle of action in the human character which is univerſal, which prevails more or leſs in all minds, we are ready to conclude, without actual proof, or much conſideration of the ſubject, that it was planted there for good and wiſe purpoſes; and this concluſion we ſhall be juſtified in drawing, although we ſhould fail in proving that it is always employed to the beſt of purpoſes, or although we ſhould be forced to confeſs, that it is often applied to the very worſt. Of ſuch principles, the love of fame appears to be the moſt ſtriking, becauſe it gives occaſions to actions more obvious than any others to common obſervation, and becauſe it endures the longeſt in the mind, being frequently as active in the decline, as in the vigour of life, and becauſe, in one ſhape or another, all men are influenced by it. The fear of ſhame, one might be inclined to ſuppoſe, was a ſimilar paſſion, or the ſame expreſſed in other words, but it appears upon the whole to be rather an accompaniment of the love of fame, in good minds. And hence is the diſtinction between good and bad men in the purſuit of fame; the former never wiſhing to attain it but by honeſt means, for fear of *ſhame*, the latter being eager to attain it by any means, and regardleſs of the delicate obſtacles of goodneſs and humanity. With the former, it is honeſt emulation, with the latter deſtructive ambition. Hence alſo the diſtinction which all hiſtorians place between the characters of heroes; between the heroic tyrant whoſe object was to conquer at the expence of the happineſs of mankind, and the heroic patriot whoſe triumphs were the triumphs of humanity over oppreſſion.

But to confine the love of fame to heroes, to ſtateſmen, or great commanders, were to contradict the poſition we ſet out with, of the univerſality of the paſſion. The love of fame is nothing more than a deſire to be thought well and ſpoken well of by the world; and this is inherent, more or leſs, in every man. The exceptions can only be in the caſe of men of the moſt depraved characters. *They* may affect to deſpiſe the good name of the world, but even with them it is but an affectation. An author, who ſeems to have been an acute obſerver, ſays, that "Not only thoſe who would recommend themſelves by great actions and liberal arts, but even the loweſt of mankind, and they who have gone out of the road, not only of honour, but alſo of common honeſty, have ſtill a remaining reliſh for praiſe and applauſe. For you may frequently obſerve malefactors at an execution, even in that weight of ſhame and terror, preſerve, as it were, a corner of their ſouls, for the reception of pity, and die with the ſturdy ſatisfaction of not appearing to bend at the calamity; or, perhaps, to deſert their accomplices, by the ſacrifice and betraying of whoſe lives we frequently ſee they might have ſaved their own: By which laſt inſtance (that the baſeſt of men have ſtill ſomething punctilious to them) we may obſerve that the ſenſe of fame and conſcience is never quite killed; but that when we come to the worſt, we have only carried them into another intereſt, and turned our gratifications that way only to different objects."

From what has been already advanced, the difference may be comprehended between the love of fame, and of honour, or reputation. Fame is, indeed, a paſſion eſſentially different from either; more nearly allied, perhaps, to honour than to reputation, but it may exiſt, and the higheſt fame

may be obtained, without either. Fame is not ſo much the deſire of being applauded for probity and goodneſs (that is reputation) as it is of ſtanding prominent in the ranks of life, and acting one of the principal parts upon the theatre of the world; and whether the character we act be good or bad, no more concerns the man who is ambitious of fame, than it does the common actor upon the ſtage. It is ſufficient for both that it is the principal character, that which moſt attracts the eyes and attention of the public.

Reputation is ſilent and inactive, unleſs called forth upon ſome ſpecial occaſion: Fame is very buſy, and is ever to be heard either whiſpering or clamouring. Many men have courted fame, as others court their miſtreſſes, for their beauty or their riches, and are perfectly regardleſs of the means of attainment. Had men of vaſt fame been attentive to the means of arriving at it, had they liſtened to reputation, and courted honour, the page of hiſtory would have wanted many of thoſe ſplendid embelliſhments which captivate us in the ſtyle of a writer who catches a portion of the dignity of his ſubject to ſublime his ſentiments, and animate his narrative. But although men of ſuch ambition deſpiſe the diſtinctions between honourable and dishonourable fame, the world will make them, and when the brilliancy of great actions no longer dazzles, a juſt eſtimate is formed. When at ſchool we are charmed with the details of the triumphs of the Romans. In maturer years, we learn to deſpiſe a people who, in the moment of victory, forgot the call of humanity. We deſpiſe Paulus Emilius making his public entry into Rome, with Perſeus and his infant family at his chariot wheels; but we admire our own Black Prince, when he conducted the captive Gallic monarch into London. In the laſpe of time between thoſe two events, the world had improved in its notions of heroic fame. Heroes became merciful men; and ſavage, indeed, muſt that mind be, whom victory cannot ſooth into lenity.

Men of ſpeculation, in their cloſets, have decried the love of fame; they have termed it an empty bubble, an unſubſtantial ſomething which ſerves to bewilder enthuſiaſtic minds; and ſome have even inſinuated that it is contrary to reaſon and religion. All this appears to be ill-founded. It does not appear to be contrary to reaſon, becauſe that which is agreeable to the common conſent of all mankind in all ages, that which dwells in the nobleſt and moſt upright minds, muſt be ſomething reaſonable in itſelf; and, if liable to abuſe, in that reſpect it only partakes of the nature of every thing in itſelf good and harmleſs. Nor is there any proof that it is contrary to religion: religion forbids not the moſt active exertions of virtue; and the applauſe and publicity which follow them is as natural and as unavoidable as the light and heat which attends the riſing of the ſun, or the cheerfulneſs which that luminary ſheds over the creation. Religion enjoins us to practice the heroic virtues, to riſe ſuperior to the petty intereſts of ſelf, and to the importunities of enſlaving paſſions. What religion enjoins, religion alſo bids us applaud and record, and this is *fame*.

We are liable, however, to deſpiſe fame, as we deſpiſe immenſe wealth, and exalted rank, becauſe we confine it to a certain ſmall claſs of men, whoſe bold flights we deſpair of attaining. But fame, as has been already ſaid, is not confined to thoſe men who are deemed worthy of a place in hiſtory. As every man is more or leſs inclined to obtain fame, ſo likewiſe he has it in his power, in proportion to his ſituation. The merchant, whoſe credit is known over all Europe, has acquired great fame; nor is it the leſs becauſe he will not be ſo frequently noticed, in the hiſtory of Europe, as the late king of Pruſſia. There is a private, or domeſtic, as well as a public fame. John Weſley

and George Washington are justly reckoned famous. Their fame will descend to posterity. But I doubt whether they would be inclined to exchange characters. In literary fame, the gradations are illustrative of this point. Many volumes have been written to celebrate the merits of Homer, Virgil, Milton, and Shakspeare, yet these merits are not equal. Homer and Virgil have been known over all the globe, and are read with enthusiasm by men of all nations. The fame of Milton and Shakspeare is only *heard* of by foreigners; they can judge of their merits only by the medium of translation. Though able to read them in the original, we all know what difference that makes in a living language.

Bolingbroke was a famous man. His actions are in history; his works have been much read: they are little read now. We do not speak of him, as of Hume, Gibbon, Robertson, &c. and the time will come when *their* fame shall diminish as well as his, or be recognized only by scholars, and librarians. It is, therefore, the degree of fame which has led those into the mistake, who think fame unattainable, because unattainable in the highest degree. And a similar prejudice has led many to think that fame and wickedness are inseparable. But although this will generally be the case when men seek fame for itself only, and are regardless of the means, it will not be the case where great actions are performed with a sincere desire to benefit mankind, and a virtuous life is led because such a life is pleasing in the eyes of God and man. Such men will acquire fame without seeking it, and it will be bestowed upon them when they are beyond the reach of flattery.

That fame is a passion implanted in us by the hand of nature, appears in nothing more remarkable than in this, that it adheres to us at the hour of death. The philosophy of this, I own is not quite so obvious. We cannot easily determine why men should be desirous of praises which they cannot hear, and of an approbation with which they cannot be flattered. But the fact is certain, and the pleasure of it, the operation of the love of fame in this case, consists in anticipating the good name which can no longer benefit us, the tender respect which cannot sooth us, and the applauding record of posterity to which we shall be for ever insensible. Misers, a species of men, more despised in their lives than any others, have thought they have wisely sacrificed the regard of a small circle of friends and relations, to the many thousands who should be born to mention them with respect, and hand down their names to the latest posterity, as the best benefactors to the human race. How many of our noblest charitable institutions have been owing to this love of fame? And how strong must the love of fame be in that man who is content to be execrated when curses may be heard, that he may purchase approbation when it is not in his power to enjoy it!

The desire of fame, instead of being forbidden by our religion, is placed upon the most solid foundation. We are not there taught to pursue it as that which is in itself valuable, without any consideration of the steps by which we reach the summit. It is therefore to be cherished in young minds, and always joined with the fear of shame. To minds thus cultivated, every thing mean, cruel, dishonourable, and vicious, will appear hostile to true fame, and the most aspiring genius, guided by these sentiments, will attain an elevation which his contemporaries will regard with veneration, and which the wary and unbiassed eye of posterity shall in vain scrutinize to find a blemish.

A. L.

ON ATTENTION TO LITTLE THINGS.

[In a Letter to a Young Gentleman.]

Dear Jack,

YOU accuſe me, and juſtly, of having joined in the laugh againſt you when we met at Mr. —'s table: I plead guilty. Who could refrain, eſpecially when the ladies took the lead? But it is not equally juſt in you to blame me as having committed a breach of friendſhip, or of goodnature. We often laugh, we ſcarce know why. The diſorder is infectious, and of all the actions we perform, that is the one which leaſt diſcovers the *criminal intent*. But you will give me leave to ſay, that your extreme awkwardneſs, from the moment of your arrival to your departure, diſappointed the hopes I had entertained of a ſmart young fellow, piping hot from the univerſity. I know that our univerſities now are not the places of hermitical auſterity, and while I heard with pleaſure that you were an accompliſhed ſcholar, I took for granted that your education in polite manners had not been neglected. *Hinc origo mali.* I was vexed to ſee you ſo awkward in every motion; and your attempt to carve would have completed my mortification, had I not diſcharged my ſpleen in a laugh, which, you know, I had not the merit of beginning.

Your proficiency in the ſciences has been great; you have exceeded all expectation which your years could juſtify; and you 'bear your bluſhing honours thick upon you.' Well, very well, indeed. We are all delighted to ſee and know this; but recollect you are coming into a world, for which you have not provided a ſufficient ſtock of marketable articles. Your learning is great to *you*, and it will be ſerviceable on great occaſions; but great occaſions do not occur every day. On the other hand, you will every day be called upon for a diſplay of a ſet of ſecond rate, third or fourth rate (if you will) qualities, with which you ſeem to have formed no acquaintance. Theſe are the little things, *les petites attentions*, the ſmall change of behaviour, which conſtitute eaſy and agreeable manners, which are every where current, and every where expected. There are no privileges, political or civil, which can be pleaded in excuſe for the want of theſe. A great man, indeed, may do without them, but then he muſt be a very great man, and the company he keeps muſt conſiſt only of thoſe who think him a very great man, and who, provided he beſtows his favours upon him, do not care if he were a very great ſcoundrel. But, now, *you* are not a great man, and although you are a very clever fellow, and have more in your individual head than all the numerous company put together, whom we met the other day, yet they would deſpiſe you, and ſir Iſaac Newton himſelf, if he were ſo deficient, as you appeared to be, in little things.

You may obſerve (for you will ſoon experience it) that the greateſt qualifications, and higheſt mental endowments, are not thoſe which procure reſpect in company. Poſſeſſed of theſe, there may be, perhaps, a general riſe when we enter the room, and the buzz may be, "This is the learned Dr. Theorem, of Corpus Chriſti College, Oxford;' but there our conſequence ends: Dr. Theorem is too abſent to play at cards; he cannot hand a cup of tea without ſpilling it, and it is impoſſible to truſt him even to divide a pudding. The firſt philoſopher of his age may ſit like a ſtatue for a whole evening, while Jacky Maggot of the guards, who does not know whether Europe be an iſland or a continent, keeps the company in a roar of laughter, and in unceaſing admiration of his prodigious cleverneſs, and polite attention to the ladies, and the gentlemen who

are ladies in every thing but ſex.—I do not ſay that you will always meet with ſuch company, or ſuch ladies; but the caſe is common enough for me to give you the hint.

You will ſay, perhaps, that the contempt of ſuch people is beneath the notice of a wiſe man or a philoſopher. Why, truly, Jack, ſo it would be, if wiſe men and philoſophers were 'as plentiful as blackberries.' But we muſt not ſet up for reformers upon too broad a ſcale; and, between ourſelves, as the original intention, and propereſt uſe of company, is to relax the mind from the labour of ſtudy or buſineſs, I cannot help thinking, that it is every man's duty to make himſelf agreeable, to get up a part in the little drama, and make the whole go off ſmooth and eaſy. I know that you could, the other day, have deſcanted at great length upon the theory of perception, on the doctrines of the peripatetics, and the errors of the Carteſians; that you could have illuſtrated the topics of duration and identity, defined with accuracy the firſt principles of contingent and of neceſſary truths, and that you could have reſcued the genuine doctrines of mind from the ſophiſtries of David Hume: all this I give you full credit for, but I do aſſure you it would have done you infinitely more honour if you had hit the joint of that fowl Mrs. —— put upon your plate. I may hear of your fame from your fellows of C. C. C. and I may read of you in the Reviews; but at preſent the queſtion put to me is, 'Where's your learned friend that ſplaſhed us with the gravy?'

This is all ſhocking, you will ſay, very ſhocking—And what then? You cannot help it. To uſe the expreſſion of your favourite Dr. Johnſon, 'It would be impoſſible if it were endeavoured, and it would be fooliſh, if it were poſſible.' A-propos, of doctors. A few days ago Dr. ——, of Chriſt Church, happened to call at Mr. ——'s, where was a large party. He ſtaid ſupper, but departed almoſt as ſoon as the cloth was removed. One or two of the party joined me in high encomiums upon his ſplendid talents, and profound learning.' 'I don't know,' cried Mrs. —— (who is no fool neither) 'whether he be ſo very learned, but I am ſure he knows nothing of mixing a ſalad!'—Here is degradation for you.

Make the moſt of your time, however, where you are. Learn little things; learn to carve, as well as diſpute: and do not fancy every room you enter to be the theatre at Oxford.

I am, dear Jack, yours ſincerely,
H. A.

MISCELLANEOUS THOUGHTS ON BOOKS.

'Of making many books there is no end.' SOLOMON.

WHEN we conſider the vaſt quantity of publications which are every day coming from the preſs, and when, upon a juſt appreciation of their intrinſic value, we diſcover very few original ſentiments in them, we cannot but admire that happy faculty in man, whereby he can vary and new-dreſs old arguments and precepts, ſo as to give them the charms of novelty, and often the force of conviction. It has been obſerved, of late years, that the publications of the Engliſh preſs have multiplied tenfold, and that even their ſucceſs as to circulation has very nearly kept pace with their number. It is a fair inference that the number of readers is increaſed; for although there may be ſome perſons who purchaſe books merely as ornaments to a room, ſuch a caſe cannot often happen, and I think that conſidering the improved ſtate of converſation, the other inference is the more juſt one.

How far the intereſts of true litera-

ture are concerned in the increaſe of publications is another queſtion. Without entering particularly on the ſolution of it, I ſhould imagine that literature is ſpread over the kingdom in ſmall portions fitted to the wants and to the leiſure of its inhabitants, but that the number of real ſcholars, and of aſſiduous ſtudents is very far from being greatly increaſed. We are greatly behind the writers of the laſt century in the magnitude of our productions. An author now is very well content to produce an octavo volume within a time, half of which would have been ſufficient for a ſcholar of the laſt century to produce a folio. Indeed the ſcholars of the laſt and preceding centuries, produced more works than many who think themſelves ſtudents now, could undergo the fatigue of reading; and it is in vain to ſay, that in ſuch voluminous compoſitions there is a great deal very ſuperfluous, a great deal of no value, and which it would be a waſte of time to read. The fact proves, at leaſt, that they were more aſſiduous ſtudents, that they devoted a portion of time to their ſtudies, which we ſhould think equal to the horrors of an impriſonment. They allowed little time for converſation, while we are ſatisfied to ſtudy juſt as much as will enable us to ſhine in converſation.

But the authors of the laſt and preceding centuries, it muſt be confeſſed, were rather compilers than original writers. Emerging from the long night of darkneſs which overſpread Europe, they had to ranſack the ſtores of antiquity for materials, which however crudely digeſted, formed a foundation for the more ſimplified learning of the preſent day. Their minds were too much ſhackled by prejudices of the philoſophical and religious kind, to allow them to expand their own thoughts, inſtead of thoſe of others; and, however much they improved on *their* originals, they were ſtill led by authority. An agreeable author of our days, ſays that the number of thoſe writers who can with any juſtneſs of expreſſion be termed thinking authors, would not form a very copious library, though one were to take in all of that kind, which both ancient and modern times have produced. 'Neceſſarily,' ſays he, 'I imagine, muſt one exclude from a collection of this ſort, all critics, commentators, modern Latin poets, tranſlators, and, in ſhort, all that numerous undertribe in the common-wealth of literature that owe their exiſtence merely to the thoughts of others.' Were we, indeed, to be as faſtidious as this writer propoſes, what would be the fate of the Vatican and the Bodleian libraries. I fear we ſhould be thought as great ſavages as thoſe who burnt the library of Alexandria, a loſs, by the by, of much leſs conſequence than has generally been ſuppoſed, if we may reaſon from what was left to what was loſt.

Voluminous as the European authors of the laſt two centuries have been, what are they in compariſon with the ancients, but mere pigmies in literature, mere pamphleteers? We are told that Epicurus left behind him three hundred volumes of his own works, all original; for Aulus Gellius, quoting Varro, ſays, there was not a citation among them. Didymus, the grammarian, wrote no leſs than four thouſand! Origen wrote ſix thouſand treatiſes. Of ſuch works what can we think? We may ſurely very fairly judge from what is extant, and ſay that if they did not bear the ſtamp of antiquity, many of them would have no currency at all.

Plutarch wrote above one hundred and fifty treatiſes, of which we have no remains. I cannot offer a more juſt opinion of him than I find in a ſcarce and curious tract of the late lord Hailes. Of Plutarch he ſays, 'His reading was, at leaſt, equal to his judgment. His works are treated with a ſort of traditionary reſpect, by perſons, who probably know him merely as a biographical compiler, ſo that one can hardly venture, even in this free age, to ſpeak freely of him. But if a father of the church, or a modern an-

tiquary, had written profeſſed diſſertations on the following ſubjects, what ſhould we have ſaid of his genius, or of the manner in which he choſe to employ himſelf, and edify the public?' His lordſhip then quotes the following ridiculous queſtions, which the reader will find gravely diſcuſſed in Plutarch's morals. 'Why do the Roman women ſalute their relations with a kiſs? Why does a man, returning from the country, or from a journey, ſend before to advertiſe his wife of his return? It has been ſuggeſted to me, that it is to tell her to get dinner ready; but Plutarch aſſigns *four* reaſons for the cuſtom, and *that* is none of them. Whether ought he, who gives an entertainment, to place his gueſts at table, or to ſuffer them to place themſelves? *Which* was firſt, a hen or an egg? Why are women very long in getting drunk? Why are men, when half-drunk, more reſtleſs and diſorderly, than when they become quite intoxicated? Why are there many gueſts invited to a wedding dinner? Why is no faith to be given to dreams in autumn? Is it conſiſtent with the good manners that ought to be obſerved at a ſympoſium, for a man to fall aſleep, before he gets drunk?'

So much for this great philoſopher. A man in our days, provided he were not debarred the uſe of pen and ink, might fill up many reams of paper with ſuch diſquiſitions, but I queſtion whether the moſt liberal of our booksellers would be induced to hazard the expence of publication. We owe much, undoubtedly, to the laborious compilations of ancient writers, but unleſs we employ the niceſt diſcrimination in ſelecting the gold from the droſs, our time will be ſpent to as little purpoſe in reading as theirs was in writing.

It is, at the ſame time, no reproach, no diſhonour to the voluminous writers of paſt ages, that their works are now ſeldom ſeen, and ſeldomer read. They gave us all they had, the learning of their own times, but they could not give us what they never had, the ſuperior light and knowledge of more modern times. The mind of man is in a ſtate of progreſſive improvement. The preſent age knows more than the laſt. The next will know more than the preſent, and the immortality of the ſoul has been beautifully illuſtrated by the author of Clio, who ſays (I quote from memory) that as we die long before our faculties are exhauſted, long before we learn all that we are capable of learning, is it not highly probable that there is a future ſtate of exiſtence, where our progreſs in learning ſhall never be interrupted, and where perfect knowledge ſhall be perfect happineſs?

BIBLICUS.

THE BRITISH MUSE.

ODE for the NEW YEAR 1795.

By HENRY JAMES PYE, Eſq. Poet-Laureat.

AGAIN the ſwift revolving hours
Bring January's frozen car;
Still diſcord on the nations low'rs,
Still reigns the iron power of war.
Huſh'd be awhile the tumult ſtorm;
Awhile let concord's milder form
Glide gently o'er each ſmiling plain,
While, as they weave the myrtle wreath,
The ſportive loves and graces breathe
The hymeneal ſtrain.

From Parent-elbe's high-trophy'd ſhore,
Whence our illuſtrious chiefs of yore
Brought that bleſt code of laws their ſons revere,
And bade the glorious fabric flouriſh here,
The Royal Virgin comes—Ye gales
Auſpicious, fill the ſwelling ſails;
And, while ye gently curl the azure deep,
Let ev'ry ruder blaſt in ſilence ſleep:
For not from Afric's kinds,
Or either India's glowing lands,
Have e'er the favouring Naiads brought
A prize to us ſo dear, a bark ſo richly fraught.

Bright maid, to thy expecting eyes
When Albion's cliffs congenial riſe,
No foreign forms thy look ſhall meet,
Thine ear no foreign accents greet:
Here ſhall thy breaſt united tranſports prove
Of kindred fondneſs, and connubial love.
O that amid the nuptial flowers, we twine,
Our hands the olive's ſober leaves might join;
Thy preſence teach the ſtorm of war to ceaſe,
Diſarm the battle's rage, and charm the world to peace.

Yet if the ſtern vindictive foe,
Inſulting, aim the hoſtile blow,
Britain, in martial terrors dight,
Lifts high th' avenging ſword, and courts the fight.
On every ſide behold her ſwains
Crowd eager from her fertile plains;
With breaſts undaunted, lo! they ſtand
Firm bulwarks of their native land;
And proud her floating caſtles round,
The guardians of her happy coaſt,
Bid their terrific thunder ſound
Diſmay to Gallia's ſcatter'd hoſt:
While ſtill Britannia's navies reign
Triumphant o'er the ſubject main.

To a FRIGHTED HARE.

LITTLE timid creature, ſtay!
Why ſo ſwiftly fly away?
Tremble not at ſight of me,
I ſhall never injure thee.
Tho' too many of my race
Joying in the cruel chace,
Thee with eager ſhouts purſue,
Flying o'er the morning dew,
Judge not of us all by thoſe,
Tremble, all are not thy foes.
Some have are of heart, humane,
Where the gentler paſſions reign,
Thinking ſtep-dame Nature hard,
Pitying view with kind regard
Thy untoward hapleſs fate,
And thy weak defenceleſs ſtate;
Safe from terrors and alarms,
Thou might'ſt ſhelter in their arms.
Wand'ring o'er the vernal meads,
Whither Contemplation leads;
Or to mark the op'ning ſpring;
Or to hear the warblers ſing;
Or to waſte the lonely hours,
Culling wildly ſcatter'd flow'rs;
Or by Luna's placid light,
When I woo the ſilent night;
Pleas'd, I oft unſeen ſurvey,
All your ſportive am'rous play;
Reveling in haſty joys,
While unfear'd by hated noiſe.
Should my errant feet too rude,
On your frolic ſport intrude;
Should that hated form appear,
Swift you fly in wildeſt fear,
Trembling ſeek a ſafe retreat,
Borne away on ſinews fleet.
Little timid creature, ſay,
Why ſo ſwift you flee away?
Too much cauſe thou haſt indeed
Fearful wand'rer, for thy dread,
Never beaſt on earth that goes,
Numbers ſuch a hoſt of foes.
Haply viewleſs o'er the ſky,
As the eagle paſſes by,
Darting from his airy ſteep,
On thy placid noonday ſleep,
Bears thee to the cliffy brow
Nodding o'er the main below,
Where impatient for their food,
Famiſh'd ſcream his callow brood.
Or on earth, or in the air,
Foes ſurround thee ev'ry where,
Watching, or by night or day
Thee to make their deſtin'd prey;
Ne'er exempt from fatal harms,
All thy life is but alarms.
Chiefly man's tyrannic ſway,
(He who boaſts of reaſon's ray,
He whoſe heart alone can feel
Pity's ſoftly-ſighing thrill,)
By uncounted numbers ſlain,
Baſely deſolates the plain:
Panting o'er the weary fields,
What a ſavage joy it yields,
Ev'ry little art to foil,
Circumvent each ſubtle wile,
And with ſtubborn patience trace
All the mazes of thy race,
Till exhauſted, breathleſs, worn,
Thou by bloody hounds art torn.
Fly then, timid creature, fly!
All thy fears I juſtify;
Thou who haſt the ſavage try'd,
How canſt thou in man confide?

EUSEBIUS.

SONG to LAURA.

[From Kendal's Poems.]

ERE Laura met my raviſh'd view,
My cheek confeſs'd health's roſeate bloom;
My ſoul nor love nor ſorrow knew—
How beauty's power hath chang'd my doom!

'Mid lonely glades, with tear-fraught eyes,
Wand'ring I mourn my ſecret pain:
The paſſing breeze, with lengthen'd ſighs,
In pity murmurs to my ſtrain.

Now, lull'd by hope's elyſian ſmile,
My fears in ſilent ſlumber reſt:
Now dreams, that every thought beguile,
Serenely ſoothing, cheer my breaſt.

But ah! too ſoon my grief returns—
Again tumultuous paſſions riſe;
Again my tortur'd boſom burns,
And all the dear illuſion flies!

ODE to the NYMPH of the FOUNTAIN of TEARS *.

HAIL, pious Nymph! whoſe gentle power
O'er the Spring of Tears preſides,
And each ſoft drop and tender ſhower
From the myſterious Fountain guides:

Not Tears, that on th' approach of Death
Adown the cheeks of tyrants roll,
When Conſcience to the lateſt breath
Holds up the mirror to the Soul;

Nor ſuch, as moiſten the dark cells,
Where, while the ſlaves the rack prepare,
The ſtern Inquiſitor compels
Ev'n godlike Virtue to deſpair!

Such bitter waters of diſtreſs
Riſe from other Springs than Thine,
Springs which infernal Gnomes poſſeſs,
Dread Miniſters of wrath divine:

Heaven gives to thee! the ſacred part
Of guarding thoſe pure ſtreams, that flow
From the ſoft motions of the heart,
In melting for another's woe:

Derived from the ſame clear rills
The Tears of Joy, and glad ſurpriſe,
The rapt Soul's tranſport that diſtills,
Gliſtening in th' expreſſive eyes;

Are all thy own, and with them move
The beſt affections of the mind.
The warmth of friendſhip and of love,
And charity to all mankind.

Meek, penſive Goddeſs! let me take
With all thy pleaſures, all thy pain,
And ne'er, tho' tremblingly awake,
Of Senſibility complain.

Oft let me come alone, unſeen,
Before thy ſhrine my Vows to pay;
Oft taſte with Thee the calm, ſerene
Evening of a well-ſpent day:

And, diſtant from thy grotto's ſhade,
Gaze at the votaries of the world,
In Vanity's light barks convey'd,
With every glittering ſail unfurl'd:

Smile at the Great, for what they chooſe
In each fond wiſh, and fickle mood;
And pity them for what they loſe,
The Power divine of doing good:

View the mild glory round the throne,
Love with obedience command;
For others rights maintain its own,
And rule to bleſs a grateful land.

For me, whate'er may be my lot,
My proſpects clouded, or ſerene,
Cheriſh'd by Friendſhip, or forgot,
Off the ſtage, or in the ſcene;

In private eaſe, or public ſtrife,
In politics, or in plain dealing,
Whate'er the colour of my life,
I ſtill muſt be the Man of Feeling †.

ADVICE to a PARENT.

AH! let thy young enthuſiaſt ſtray
Through Fancy's rainbow-tinted way;
Let his light footſteps gaily rove
The fairy paths of joy and love!
Let him the world delighted view,
And think each flattering viſion true;
Think every heart he e'er has known,
As good and guileleſs as his own!
Why dim with tears that laughing eye?
Why draw th' unneceſſary ſigh?
For his young life is full of charms;
He dreams ſecure in pleaſure's arms;
Fancy and Hope their gifts diſpenſe,
And ſtrength impart to innocence.
Awhile life's hateful truths forego,
Nor wake him to a world of woe;
But when maturer age declares
Its ſtern approach by ſterner cares;
When firſt the long-worn path he tries,
Where ſorrow, like a ſerpent, lies

* The idea of the ſubject is taken from a beautiful Alcaic ſtanza, written by Mr. Gray:

Oh Lachrymarum Fons! tenero ſacros
Ducentium ortus ex animo quater
Felix! in imo qui ſcatentum
Pectore, Te pia Nympha! ſenſit.

In Maſon's Memoirs of the Life and Writings of Gray, page 33.

† The character of a Man of Feeling is drawn with great truth and taſte in a Novel, written ſome years ago, by Mr. Henry Mackenzie of Edinburgh.

Hid underneath ſome fond delight,
And rears her with'ring form to ſight;
When, ſtarting at the direful view,
Father! he turns his eyes on you;
When doubting, with his hopes at ſtrife,
He, trembling, aſks, if this be life?
Then open all his little breaſt
To truths that muſt, muſt be confeſs'd;
Theſe truths in gentleſt ſounds unfold,
The cold ſad tale that muſt be told:
The fated ills life muſt endure,
And comfort what you cannot cure.

VERSES to a Young LADY, to conſole her on an Impediment in her Speech.

WHEN fair Almeria's gentle voice
Divides the yielding air,
Fix'd on her lips the quiv'ring ſounds
Exceſs of bliſs declare.

There, lingering round their roſy gate,
They view their fragrant cell,
Unwilling yet to leave that mouth,
Where all the graces dwell.

While ſome ſoft accents ſtrike the ear
With ſweet imperfect ſound,
A thouſand others die within,
In their own honey drown'd.

Yet through this cloud, diſtinct and clear,
Strong ſenſe directs its dart;
And, while it ſeems to ſhun the ear,
Strikes full upon the heart.

A LATIN TRANSLATION of the Same.

ALMERIÆ vox blanda leves dum dividit auras,
Teſtantur tremuli gaudia ſumma ſoni;
Limine enim in roſeo ſiſtunt, cellamque tuentes
Fragrantem, nunquam longius ire volunt.
(Talibus et quiſnam non vult hærere labellis?
Gratiæ ubi et riſus ludere ſemper amant.)
Erumpunt verò quædam vaga murmura tandem,
Murmura melliflua penè liquata morâ.
Plura autem, tardata nimis, moriuntur ibidem,
Ac multo penitus nectare merſa manent.
Interea tantâ verborum condita nube,
En! tamen ingenii vis manifeſta micat:
Et quanquam, propè caſſa ſono, vix occupet aures,
Ritè, ſuo pollens fulgure, corda ferit.

ODE to APATHY.

TAME Apathy, whoſe gelid eye,
Ne'er moiſten'd with a tear, the ſigh
From ſorrows virgin heart that flew,
Cheriſh'd by the pitying dew,
As on the chilly ev'ning air,
It ſought the ſcowling nymph deſpair:
Who motionleſs—the ſharpen'd thorn,
From miſery's weeping briar torn,
Could'ſt ſee the ſmiling envies dart,
Within her young and artleſs heart!
Shalt thou—thy languid ſpells diſpenſe,
And ſtrew thy torpor o'er the ſenſe;
Diffuſe the Lethean ſhow'rs of ſnow,
O'er the warm tide of human woe;
Or, on the ſoul's fine fervor ſeize,
And ſympathy to winter freeze?
No, nymph—ſo baneful to my ſight
I'll chaſe thee to the thick-wove night:
Where chaos ſhall thy form enſhroud,
And darkneſs veil thee in her blackeſt cloud.

SONNET.

WHILE in ſweet-warbled notes the Red-breaſts ſing,
To Eve's pale ſhadow, and on ſolemn wing,
The grey Owl ſails along; the fading face
Of Nature, wears a melancholy grace!
But lo, on yonder ſtreamlet's duſkier banks
The merry Fairies riſe in fiery ranks;
And, glancing to the moon, their circlets link,
Then, ſudden, from the eye of Fancy ſink
Into the gloomy dell! And, now, cold fear
Sees the deep-labouring cloud its burden bear
Down chaſmed crags, as from the moor land far
Whiſtles the gale—When, quenching the ſoft ſtar
Of Heſper, in ſlow rounds fell wizards turn,
And bid to mutter'd ſpells the drugs of magic burn.

TO A BLIGHTED ROSE.

YES, thou muſt die!—Sweet flower thy beauties fade,
And round thy drooping head chil breezes fly;
Cold is the hand, that wont to lend its aid
Loſt the mild radiance of that cheering eye!

Thus, did the promiſe of unclouded day,
Mark the bright dawn; my early proſpects chear'd;
But ah! ere noon arriv'd, faint beam the ray;
It caſt a ſickening gleam,—and diſap pear'd,

MYRA.

AMERICA.

CONGRESS of the UNITED STATES, November, 19.

THIS day at twelve o'clock, the president of the United States met both houses of the legislature, in the chamber of the house of representatives, and delivered the following address:

'Fellow Citizens of the Senate, and of the House of Representatives.

'When we call to mind the gracious indulgence of heaven, by which the American people became a nation; when we survey the general prosperity of our country, and look forward to the riches, power, and happiness to which it seems destined; with the deepest regret do I announce to you, that during your recess, some of the citizens of the United States have been found capable of an insurrection. It is due, however, to the character of our government, and to its stability, which cannot be shaken by the enemies of order, freely to unfold the course of this event.

'During the session of the year 1790, it was expedient to exercise the legislative power granted by the constitution of the United States, "to lay and collect excises." In a majority of the states, scarcely an objection was heard to this mode of taxation. In some, indeed, alarms were at first conceived, until they were banished by reason and patriotism. In the four western counties of Pennsylvania, a prejudice, fostered and embittered by the artifice of men who laboured for an ascendancy over the will of others by the guidance of their passions, produced symptoms of riot and violence. It is well known that congress did not hesitate to examine the complaints which were presented; and to relieve them, as far as justice dictated, or general convenience would permit. But the impression which this moderation made on the discontented, did not correspond with what it deserved — The arts of delusion were no longer confined to the efforts of designing individuals. The very forbearance to press prosecutions, was misinterpreted into a fear of urging the execution of the laws; and associations of men began to denounce threats against the officers employed. From a belief, that, by a mere formal concert, their operation might be defeated, certain self-created societies assumed the tone of condemnation. Hence, while the greater part of Pennsylvania itself were conforming themselves to the acts of excise, a few counties were resolved to frustrate them. It was now perceived that every expectation from the tenderness which had been hitherto pursued, was unavailing; and that further delay could only create an opinion of impotency, or irresolution, in the government. Legal process was therefore delivered to the marshal, against the rioters and delinquent distillers.

'No sooner was he understood to be engaged in this duty, than the vengeance of armed men was aimed at his person, and the person and property of the inspector of the revenue. They fired upon the marshal, arrested him, and detained him for some time as a prisoner. He was obliged, by the jeopardy of his life, to renounce the service of other processes on the west side of the Alleghany Mountain; and a deputation was afterward sent to him, to demand a surrender of that which he had served. A numerous body repeatedly attacked the house of the inspector, seized his papers of office, and finally destroyed by fire his buildings, and whatsoever they contained. Both of these officers, from a just regard to their safety, fled to the seat of government, it being avowed, that the motives of such outrages were to compel the resignation of the inspector; to withstand by force of arms the authority of the United States, and thereby to extort a repeal of the laws of excise, and an alteration in the conduct of government.

'Upon the testimony of these facts, an associate justice of the supreme court of the United States notified to me, "That in the counties of Washington and Alleghany in Pennsylvania, the laws of the United States were opposed, and the execution thereof obstructed by combinations, too powerful to be suppressed by the ordinary course of judicial proceedings, or by the powers vested in the marshal of that district." On this call, momentous in the extreme, I sought and weighed what might best subdue the crisis. On the one hand, the judiciary was pronounced to be stripped of its capacity to enforce the laws; crimes, which reached the very existence of social order, were perpetrated without controul; the friends of government were insulted, abused, and over-awed into silence, or an apparent acquiescence; and to yield to the treason-

Hid underneath some fond delight
And rears her with'ring form to
When, starting at the direful vi
Father! he turns his eyes on yo
When doubting, with his hope
He, trembling, asks, if this b
Then open all his little breast
To truths that must, must be
These truths in gentlest soun
The cold sad tale that must
The fated ills life must end
And comfort what you can

VERSES to a Young L.
her on an Impediment

WHEN fair Almer
Divides the yiel
Fix'd on her lips the o
Excess of bliss decl

There, lingering rou
They view their f
Unwilling yet to lea
Where all the gr

While some soft ac
With sweet im
A thousand othe
In their own

Yet through thi
Strong sense
And, while it
Strikes full

A LATIN T

ALMERIA
aura
Testantur
Limine er
tu
Fragrant
(Talibu
Gratiæ
Erump
Murn
Plura
Ae
Inte
En
Et
P

AMERICA.

CONGRESS of the UNITED STATES, November, 19.

THIS day at twelve o'clock, the president of the United States met both houses of the legislature, in the chamber of the house of representatives, and delivered the following address:

'Fellow Citizens of the Senate, and of the House of Representatives.

'When we call to mind the gracious indulgence of heaven, by which the American people became a nation; when we survey the general prosperity of our country, and look forward to the riches, power, and happiness to which it seems destined; with the deepest regret do I announce to you, that during your recess, some of the citizens of the United States have been found capable of an insurrection. It is due, however, to the character of our government, and to its stability, which cannot be shaken by the enemies of order, freely to unfold the course of this event.

'During the session of the year 1790, it was expedient to exercise the legislative power granted by the constitution of the United States, "to lay and collect excises." In a majority of the states, scarcely an objection was heard to this mode of taxation. In some, indeed, alarms were at first conceived, until they were banished by reason and patriotism. In the four western counties of Pennsylvania, a prejudice, fostered and embittered by the artifice of men who laboured for an ascendancy over the will of others by the guidance of their passions, produced symptoms of riot and violence. It is well known that congress did not hesitate to [illegible] the complaints which were pre[illegible] to relieve them, as far as justice [illegible] or general convenience would [illegible] But the [illegible] which this [illegible] ted, did [illegible] ved — [illegible] er con[illegible] viduals. [illegible] ecutions,

part of Pennsylvania itself were conforming themselves to the acts of excise, a few counties were resolved to frustrate them. It was now perceived that every expectation from the tenderness which had been hitherto pursued, was unavailing; and that farther delay could only create an opinion of impotency, or irresolution, in the government. Legal process was therefore delivered to the marshal, against the rioters and delinquent distillers.

'No sooner was he understood to be engaged in this duty, than the vengeance of armed men was aimed at his person, and the person and property of the inspector of the revenue. They fired upon the marshal, arrested him, and detained him for some time as a prisoner. He was obliged, by the jeopardy of his life, to renounce the service of other processes on the west side of the Alleghany Mountain; and a deputation was afterward sent to him, to demand a surrender of that which he had served. A numerous body repeatedly attacked the house of the inspector, seized his papers of office, and finally destroyed by fire his buildings, and whatsoever they contained. Both of these officers, from a just regard to their safety, fled to the seat of government, it being avowed, that the motives of such outrages were to compel the resignation of the inspector; to withstand by force of arms the authority of the United States, and thereby to extort a repeal of the laws of excise, and an alteration in the conduct of government.

'Upon the testimony of these facts, an associate justice of the supreme court of the United States notified to me, "That in the counties of Washington and Alleghany in Pennsylvania, the laws of the United States were opposed, and the execution thereof obstructed by combinations, too powerful to be suppressed by the ordinary course of judicial proceedings, or by the powers vested in the marshal of that district." On this call, momentous in the extreme, I sought and weighed what might best subdue the crisis. On the one hand, the judiciary was pronounced to be stripped of its capacity to enforce the laws; crimes, which reached the very existence of social order, were perpetrated without controul; the friends of government were insulted, abused, and over-awed into silence, or an apparent acquiescence; and to yield to the treason-

Hid underneath ſome fond delight,
And rears her with'ring form to ſight;
When, ſtarting at the direful view,
Father! he turns his eyes on you;
When doubting, with his hopes at ſtrife,
He, trembling, aſks, if this be life?
Then open all his little breaſt
To truths that muſt, muſt be confeſs'd;
Theſe truths in gentleſt ſounds unfold,
The cold ſad tale that muſt be told:
The fated ills life muſt endure,
And comfort what you cannot cure.

VERSES to a Young LADY, to conſole her on an Impediment in her Speech.

WHEN fair Almeria's gentle voice
Divides the yielding air,
Fix'd on her lips the quiv'ring ſounds
Exceſs of bliſs declare.

There, lingering round their roſy gate,
They view their fragrant cell,
Unwilling yet to leave that mouth,
Where all the graces dwell.

While ſome ſoft accents ſtrike the ear
With ſweet imperfect ſound,
A thouſand others die within,
In their own honey drown'd.

Yet through this cloud, diſtinct and clear,
Strong ſenſe directs its dart;
And, while it ſeems to ſhun the ear,
Strikes full upon the heart.

A LATIN TRANSLATION of the Same.

ALMERIÆ vox blanda leves dum dividit auras,
Teſtantur tremuli gaudia ſumma ſoni;
Limine enim in roſeo ſiſtunt, cellamque tuentes
Fragrantem, nunquam longius ire volunt.
(Talibus et quiſnam non vult hærere labellis?
Gratiæ ubi et riſus ludere ſemper amant.)
Erumpunt verò quædam vaga murmura tandem,
Murmura melliflua penè liquata morâ.
Pfura autem, tardata nimis, moriuntur ibidem,
Ac multo penitus nectare merſa manent.
Interea tantâ verborum condita nube,
En! tamen ingenii vis manifeſta micat:
Et quanquam, propè caſſa ſono, vix occupet aures,
Ritè, ſuo pollens fulgure, corda ferit.

ODE TO APATHY.

TAME Apathy, whoſe gelid eye,
Ne'er moiſten'd with a tear, the ſigh
From ſorrows virgin heart that flew,
Cheriſh'd by the pitying dew,
As on the chilly ev'ning air,
It ſought the ſcowling nymph deſpair:
Who motionleſs—the ſharpen'd thorn,
From miſery's weeping briar torn,
Could'ſt ſee the ſmiling envies dart,
Within her young and artleſs heart!
Shalt thou—thy languid ſpells diſpenſe,
And ſtrew thy torpor o'er the ſenſe;
Diffuſe the Lethean ſhow'rs of ſnow,
O'er the warm tide of human woe;
Or, on the ſoul's fine fervor ſeize,
And ſympathy to winter freeze?
No, nymph—ſo baneful to my ſight
I'll chaſe thee to the thick-wove night:
Where chaos ſhall thy form enſhroud,
And darkneſs veil thee in her blackeſt cloud.

SONNET.

WHILE in ſweet-warbled notes the Red-breaſts ſing,
To Eve's pale ſhadow, and on ſolemn wing,
The grey Owl ſails along; the fading face
Of Nature, wears a melancholy grace!
But lo, on yonder ſtreamlet's duſkier banks
The merry Fairies riſe in fiery ranks;
And, glancing to the moon, their circlets link,
Then, ſudden, from the eye of Fancy ſink
Into the gloomy dell! And, now, cold fear
Sees the deep-labouring cloud its burden bear
Down chaſmed crags, as from the moor land far
Whiſtles the gale—When, quenching the ſoft ſtar
Of Heſper, in ſlow rounds fell wizards turn,
And bid to mutter'd ſpells the drugs of magic burn.

TO A BLIGHTED ROSE.

YES, thou muſt die!—Sweet flower, thy beauties fade,
And round thy drooping head chill breezes fly;
Cold is the hand, that wont to lend its aid,
Loſt the mild radiance of that cheering eye!

Thus, did the promiſe of unclouded day,
Mark the bright dawn; my earlier proſpects chear'd;
But ah! ere noon arriv'd, faint beam'd the ray;
It caſt a ſickening gleam,—and diſappear'd.

MYRA.

AMERICA.

CONGRESS of the UNITED STATES, November, 19.

THIS day at twelve o'clock, the president of the United States met both houses of the legislature, in the chamber of the house of representatives, and delivered the following address:

"Fellow Citizens of the Senate, and of the House of Representatives.

'When we call to mind the gracious indulgence of heaven, by which the American people became a nation; when we survey the general prosperity of our country, and look forward to the riches, power, and happiness to which it seems destined; with the deepest regret do I announce to you, that during your recess, some of the citizens of the United States have been found capable of an insurrection. It is due, however, to the character of our government, and to its stability, which cannot be shaken by the enemies of order, freely to unfold the course of this event.

'During the session of the year 1790, it was expedient to exercise the legislative power granted by the constitution of the United States, "to lay and collect excises." In a majority of the states, scarcely an objection was heard to this mode of taxation. In some, indeed, alarms were at first conceived, until they were banished by reason and patriotism. In the four western counties of Pennsylvania, a prejudice, fostered and embittered by the artifice of men who laboured for an ascendancy over the will of others by the guidance of their passions, produced symptoms of riot and violence. It is well known that congress did not hesitate to examine the complaints which were presented; and to relieve them, as far as justice dictated, or general convenience would permit. But the impression which this moderation made on the discontented, did not correspond with what it deserved — The arts of delusion were no longer confined to the efforts of designing individuals. The very forbearance to press prosecutions, was misinterpreted into a fear of urging the execution of the laws; and associations of men began to denounce threats against the officers employed. From a belief, that, by a mere formal concert, their operation might be defeated, certain self-created societies assumed the tone of condemnation. Hence, while the greater part of Pennsylvania itself were conforming themselves to the acts of excise, a few counties were resolved to frustrate them. It was now perceived that every expectation from the tenderness which had been hitherto pursued, was unavailing; and that further delay could only create an opinion of impotency, or irresolution, in the government. Legal process was therefore delivered to the marshal, against the rioters and delinquent distillers.

'No sooner was he understood to be engaged in this duty, than the vengeance of armed men was aimed at his person, and the person and property of the inspector of the revenue. They fired upon the marshal, arrested him, and detained him for some time as a prisoner. He was obliged, by the jeopardy of his life, to renounce the service of other processes on the west side of the Alleghany Mountain; and a deputation was afterward sent to him, to demand a surrender of that which he had served. A numerous body repeatedly attacked the house of the inspector, seized his papers of office, and finally destroyed by fire his buildings, and whatsoever they contained. Both of these officers, from a just regard to their safety, fled to the seat of government, it being avowed, that the motives of such outrages were to compel the resignation of the inspector; to withstand by force of arms the authority of the United States, and thereby to extort a repeal of the laws of excise, and an alteration in the conduct of government.

'Upon the testimony of these facts, an associate justice of the supreme court of the United States notified to me, "That in the counties of Washington and Alleghany in Pennsylvania, the laws of the United States were opposed, and the execution thereof obstructed by combinations, too powerful to be suppressed by the ordinary course of judicial proceedings, or by the powers vested in the marshal of that district." On this call, momentous in the extreme, I sought and weighed what might best subdue the crisis. On the one hand, the judiciary was pronounced to be stripped of its capacity to enforce the laws; crimes, which reached the very existence of social order, were perpetrated without controul; the friends of government were insulted, abused, and over-awed into silence, or an apparent acquiescence; and to yield to the treason-

able fury of so small a portion of the United States, would be to violate the fundamental principle of our constitution, which enjoins that the will of the majority shall prevail. On the other, to array citizen against citizen; to publish the dishonour of such excesses; to encounter the expence, and other embarrassments, of so distant an expedition—were steps too delicate—too closely interwoven with many affecting considerations, to be lightly adopted. I postponed, therefore, the summoning of the militia immediately into the field; but I required them to be held in readiness, that if my anxious endeavours to reclaim the deluded, and to convince the malignant of their danger should be fruitless, military force might be prepared to act, before the season should be too far advanced.

'My proclamation of the 7th of August last, was accordingly issued, and accompanied by the appointment of commissioners, who were charged to repair to the scene of insurrection. They were authorised to confer with any bodies of men or individuals. They were instructed to be candid and explicit, in stating the sentations which had been excited in the executive, and his earnest wish to avoid a resort to coercion: to represent, however, that, without submission, coercion must be the resort; but to invite them, at the same time, to return to the demeanour of faithful citizens, by such accommodations as lay within the sphere of executive power. Pardon too was tendered to them by the government of the United States, and that of Pennsylvania; upon no other condition, than a satisfactory assurance of obedience to the laws.

'Although the report of the commissioners marks their firmness and abilities, and must unite all virtuous men, by shewing that the means of conciliation have been exhausted; all of those who had committed or abetted the tumults, did not subscribe to the mild form which was proposed as the atonement; and the indications of a peaceable temper were neither sufficiently general nor conclusive, to recommend or warrant the farther suspension or march of the militia.

'Thus the painful alternative could not be discarded. I ordered the militia to march; after once more admonishing the insurgents in my proclamation of the 20th of September last.

'It was a task too difficult to ascertain with precision the lowest degree of force competent to the quelling of the insurrection. From a respect, indeed, to economy, and the care of my fellow-citizens belonging to the militia, it would have gratified me to accomplish an estimate.—My great reluctance to subscribe too much importance to the opposition, had its extent been accurately seen, would have been a decided inducement to the smallest efficient numbers. In this uncertainty, therefore, I put into motion 15,000 men, as being an army which, according to all human calculation, would be prompt and adequate in every view, and might, perhaps, by rendering resistance desperate, prevent the effusion of blood. Quotas had been assigned to the states of New Jersey, Pennsylvania, Maryland, and Virginia; the governor of Pennsylvania having declared on this occasion, an opinion which justified a requisition to the other states.

'As commander in chief of the militia, when called into the actual service of the United States, I have visited the places of general rendezvous, to obtain more exact information, and to direct a plan for ulterior movements. Had there been room for a persuasion, that the laws were secure from obstruction; that the civil magistrate was able to bring to justice such of the most culpable as have not embraced the proffered terms of amnesty, and may be deemed fit objects of example; that the friends to peace and good government were not in need of the last aid and countenance which they ought always to receive, and I trust, ever will, receive, against the vicious and turbulent; I should have caught with avidity that opportunity of restoring the militia to their families and home. But succeeding intelligence has tended to manifest the necessity of what has been done: it being now confessed by those who were not inclined to exaggerate the ill conduct of the insurgents, that their malevolence was not pointed to a particular law, but that a spirit inimical to all order has actuated many of the offenders. If the state of things had afforded reason of the continuance of my presence with the army, it would not have been withholden. But every appearance assuring such an issue as will redound to the reputation and strength of the United States, I have judged it most proper to resume my duties at the seat of government, leaving the chief command with the governors of Virginia.

'Still, however, as it is probable that, in a commotion like the present, whatsoever may be the pretence, the purposes

of miſchief and revenge may not be laid aſide; the ſtationing of a ſmall force, for a certain period, in the four weſtern counties of Pennſylvania, will be indiſpenſible, whether we contemplate the ſituation of thoſe who are connected with the execution of the laws, or of others, who may have expoſed themſelves by an honourable attachment to them.

'Thirty days from the commencement of this ſeſſion being the legal limitation of the employment of the militia, congreſs cannot be too early occupied with this ſubject.

'Among the diſcuſſions which may ariſe from this aſpect of our affairs, and from the documents which will be ſubmitted to congreſs, it will not eſcape their obſervation, that not only the inſpector of the revenue, but other officers in the United States in Pennſylvania, have, from their fidelity in the diſcharge of their functions, ſuſtained material injuries to their property—The obligations and policy of indemnifying them are ſtrong and obvious. It may alſo merit attention, whether policy will not enlarge this proviſion to the remibution of other citizens, who, though not under the ties of office, may have ſuffered damage by their generous exertions for upholding the conſtitution and the laws. The amount, even if all the injured were included, would not be great; and, on future emergencies, the government would be amply repaid by the influence of an example, that he who incurs a loſs in its defence, ſhall find a recompence in its liberality.

'While there is a cauſe to lament, that occurrences of this nature ſhould have diſgraced the name, or interrupted the tranquillity, of any part of our community, or ſhould have diverted to a new application any portion of the public reſources, there are not wanting real and ſubſtantial conſolations for the misfortune. It has demonſtrated, that our proſperity reſts on ſolid foundations, by furniſhing an additional proof that my fellow citizens underſtand the true principles of government and liberty; that they feel their inſeparable union; that, notwithſtanding all the devices which have been uſed to ſway them from their intereſt and duty, they are now as ready to maintain the authority of the laws againſt licentious invaſions, as they were to defend their rights againſt uſurpation. It has been a ſpectacle, diſplaying to the higheſt advantage the value of republican governments, to behold the moſt and the leaſt wealthy of our citizens ſtanding in the ſame ranks, as private ſoldiers, pre-eminently diſtinguiſhed by being the army of the conſtitution, undeterred by a march of three hundred miles over rugged mountains, by the approach of an inclement ſeaſon, or by any other diſcouragement. Nor ought I to omit to acknowledge the efficacious and patriotic co-operation which I have experienced from the chief magiſtrates of the ſtates to which my requiſitions have been addreſſed.

'To every deſcription indeed of citizens let praiſe be given. But let them perſevere in their affectionate vigilance over that precious repoſitory of American happineſs, the conſtitution of the United States. Let them cheriſh it too, for the ſake of thoſe, who from every clime are daily ſeeking a dwelling in our land. And when in the calm moments of reflection, they ſhall have retraced the origin and progreſs of the inſurrection; let them determine, whether it has not been fomented by combinations of men, who, careleſs of conſequences, and diſregarding the unerring truth that thoſe who rouſe, cannot always appeaſe a civil convulſion, have diſſeminated, from ignorance, or perverſion of facts, ſuſpicions, jealouſies, and accuſations of the whole government.

'Having thus fulfilled the engagement which I took when I entered into office, "to the beſt of my ability to preſerve, protect, and defend the conſtitution of the United States;" on you, gentlemen, and the people by whom you were deputed, I rely for ſupport.

'In the arrangements, to which the poſſibility of a ſimilar contingency will naturally draw your attention, it ought not to be forgotten, that the militia laws have exhibited ſuch ſtriking defects, as could not have been ſupplied but by the zeal of our citizens. Beſide the extraordinary expence and waſte, which are not the leaſt of defects, every appeal to thoſe laws is attended with a doubt on its ſucceſs.

'The deviſing and eſtabliſhing of a well regulated militia, would be a genuine ſource of legiſlative honour, and a perfect title to public gratitude. I therefore entertain a hope, that the preſent ſeſſion will not paſs, without carrying to its full energy the power of organizing, arming, and diſciplining the militia: and thus providing, in the language of the conſtitution, for calling them forth to execute the laws of the Union, to ſuppreſs inſurrections, and repel invaſions.

'As auxiliary to the ſtate for our de-

fence, to which congreſs cannot too frequently recur, they will not omit to enquire, whether the fortifications, which have been already licenſed by law, be commenſurate with our exigencies.

'The intelligence from the army under the command of general Wayne, is a happy preſage to our military operations againſt the hoſtile Indians north of the Ohio. From the advices which have been forwarded, the advance which he has made muſt have damped the ardour of the ſavages, and weakened their obſtinacy in waging war againſt the United States. And yet, even at this late hour, when our power to puniſh them cannot be queſtioned, we ſhall not be unwilling to cement a laſting peace, upon terms of candour, equity, and good neighbourhood.

'Toward none of the Indian tribes have overtures of friendſhip been ſpared. The Creeks in particular are covered from encroachment by the interpoſition of the general government, and that of Georgia. From a deſire alſo to remove the diſcontents of the Six Nations, a ſettlement, meditated at Preſqu'-iſle on Lake Erie, has been ſuſpended; and an agent is now endeavouring to rectify any miſconception into which they have fallen. But I cannot refrain from again preſſing upon your deliberations the plan which I recommended at the laſt ſeſſion, for the improvement of harmony with all the Indians within our limits, by the fixing and conducting of trading houſes, upon the principles then expreſſed.

'Gentlemen of the Houſe of Repreſentatives,

'The time which has elapſed ſince the commencement of our fiſcal meaſures, has developed our pecuniary reſources ſo as to open the way for a definitive plan for the redemption of the public debt. It is believed, that the reſult is ſuch, as to encourage congreſs to conſummate this work without delay. Nothing can more promote the permanent welfare of the nation, and nothing could be more grateful to our conſtituents. Indeed, whatſoever is unfiniſhed of our ſyſtem of public credit, cannot be benefited by procraſtination, and, as far as may be practicable, we ought to place that credit on grounds which cannot be diſturbed, and to prevent that progreſſive accumulation of debt which ultimately muſt endanger all governments.

'An eſtimate of the neceſſary appropriations, including the expenditures into which we have been driven by the inſurrection, will be ſubmitted to congreſs.

'Gentlemen of the Senate, and of the Houſe of Repreſentatives,

'The mint of the United States has entered upon the coinage of the precious metals; and conſiderable ſums of defective coins and bullion have been lodged with the director by individuals. There is a pleaſing proſpect that the inſtitution will, at no remote day, realize the expectation which was originally formed of its utility.

'In ſubſequent communications, certain circumſtances of our intercourſe with foreign nations will be tranſmitted to congreſs. However, it may not be unſeaſonable to announce, that my policy in our foreign tranſactions has been, to cultivate peace with all the world; to obſerve treaties with true and abſolute faith; to check every deviation from the line of impartiality; to explain what may have been miſapprehended; and correct what may be injurious to any nation; and having thus acquired the right, to loſe no time in acquiring the ability, to inſiſt upon juſtice being done to ourſelves.

'Let us unite, therefore, in imploring the Supreme Ruler of Nations, to ſpread his holy protection over theſe United States, to turn the machinations of the wicked to the confirming of our conſtitution, to enable us at all times to root out internal ſedition, and put invaſion to flight; to perpetuate to our country that proſperity, which his goodneſs, has already conferred, and to verify the anticipations of this government, being a ſafeguard to human rights.

'G. WASHINGTON.'

PROCEEDINGS *of the Fifth* SESSION *of the Seventeenth Parliament of* Great Britain.

ON Tueſday November 30, 1794, his majeſty went to the houſe of lords, and delivered the following ſpeech to both houſes of parliament:

'My Lords, and Gentlemen,

'After the uniform experience which I have had of your zealous regard for the intereſts of my people, it is a great ſatiſ-

faction to me, to recur to your advice and assistance at a period which calls for the full exertion of your energy and wisdom.

'Notwithstanding the disappointments and reverses which we have experienced in the course of the last campaign, I retain a firm conviction of the necessity of persisting in a vigorous prosecution of the just and necessary war in which we are engaged.

'You will, I am confident, agree with me, that it is only from firmness and perseverance that we can hope for the restoration of peace on safe and honourable grounds, and for the preservation and permanent security of our dearest interests.

'In considering the situation of our enemies, you will not fail to observe, that the efforts which have led to their successes, and the unexampled means by which alone those efforts could have been supported, have produced among themselves the pernicious effects which were to be expected; and that every thing which has passed in the interior of the country, has shewn the progressive and rapid decay of their resources, and the instability of every part of that violent and unnatural system, which is equally ruinous to France and incompatible with the tranquillity of other nations.

'The states general of the United Provinces have nevertheless been led, by a sense of present difficulties, to enter into negociations for peace with the party now prevailing in that unhappy country. No established government or independent state can, under the present circumstances, derive real security from such negociations: on our part, they could not be attempted, without sacrificing both our honour and safety to an enemy whose chief animosity is avowedly directed against these kingdoms.

'I have therefore continued to use the most effectual means for the further augmentation of my forces; and I shall omit no opportunity of concerting the operations of the next campaign with such of the powers of Europe as are impressed with the same sense of the necessity of vigour and exertion. I place the fullest reliance on the valour of my forces, and on the affection and public spirit of my people, in whose behalf I am contending, and whose safety and happiness are the objects of my constant solicitude.

'The local importance of Corsica, and the spirited efforts of its inhabitants to deliver themselves from the yoke of France, determined me not to withhold the protection which they sought for; and I have since accepted the crown and sovereignty of that country, according to an instrument, a copy of which I have directed to be laid before you.

'I have great pleasure in informing you, that I have concluded a treaty of amity, commerce, and navigation, with the United States of America, in which it has been my object to remove, as far as possible, all grounds of jealousy and misunderstanding, and to improve an intercourse beneficial to both countries. As soon as the ratifications shall have been exchanged, I will direct a copy of this treaty to be laid before you, in order that you may consider of the propriety of making such provisions as may appear necessary for carrying it into effect.

'I have the greatest satisfaction in announcing to you the happy event of the conclusion of a treaty for the marriage of my son the prince of Wales with the princess Caroline, daughter of the duke of Brunswick: the constant proofs of your affection for my person and family persuade me, that you will participate in the sentiments I feel on an occasion so interesting to my domestic happiness, and that you will enable me to make provision for such an establishment, as you may think suitable to the rank and dignity of the heir apparent to the crown of these kingdoms.

'Gentlemen of the House of Commons,

'The considerations which prove the necessity of a vigorous prosecution of the war will, I doubt not, induce you to make a timely and ample provision for the several branches of the public service, the estimates for which I have directed to be laid before you. While I regret the necessity of large additional burthens on my subjects, it is a just consolation and satisfaction to me to observe the state of our credit, commerce, and resources, which is the natural result of the continued exertions of industry under the protection of a free and well regulated government.

'My Lords, and Gentlemen,

'A just sense of the blessings now so long enjoyed by this country will, I am persuaded, encourage you to make every effort, which can enable you to transmit those blessings unimpaired to your posterity.

'I entertain a confident hope that, under the protection of Providence, and with constancy and perseverance on our part, the principles of social order, morality, and

religion, will ultimately be ſucceſsful; and that my faithful people will find their preſent exertions and ſacrifices rewarded by the ſecure and permanent enjoyment of tranquillity at home, and by the deliverance of Europe from the greateſt danger with which it has been threatened ſince the eſtabliſhment of civilized ſociety.'

After his majeſty had retired, earl Camden roſe to move the cuſtomary addreſs. He was decidedly of opinion, that the war ſhould be proſecuted with unremitting vigour, and that far from being diſheartened at the late ill ſucceſſes (which he hoped would prove only temporary) they ought to be an incentive to carry on the conteſt againſt the common enemy with redoubled energy. When the relative ſituation of the two countries was conſidered, it would be found that Great Britain had a decided advantage; her reſources were numerous and flouriſhing, and her credit perhaps greater than at any former period; for proof of this he had only to mention the circumſtances of the late loans. Our war eſtabliſhments were beyond compariſon greater than at any former period, and at this moment we had at command an immenſe body of land forces ready for the execution of any enterpriſe that may be determined on. On the other hand, the enemy was diſtracted by internal convulſions, and riſking every thing on external exertions far beyond its ſtrength, and which therefore neceſſarily could not continue long, without credit, and its reſources at the loweſt ebb. Its great engine of finance, the aſſignats, bears, at this moment, a diſcount of 75 per cent. A nation making ſuch preternatural efforts muſt, and at no very diſtant period, be deſtroyed by thoſe exertions.

He was aware that ſuch of their lordſhips as profeſſed to entertain different ſentiments, would exert their ingenuity in exhibiting a contraſt to the faithful picture he had delineated, and urge ſuch a ſituation as a ground for a ſpeedy pacification; but ſuch, in his idea (even if the enemy were in a ſituation to treat, even if the peace then made could be relied on as certain for a day) would be an improper ſituation for this country to make overtures of peace to France. That inſolent people, thinking that our late partial ill ſucceſſes had either diſheartened us, or reduced us to ſuch a low ebb as to oblige us to crouch to them, would riſe in their demands to ſuch a degree, as would not only be inadmiſſible, but render us deſpicable in the eyes of all Europe. A peace ſo patched up, even on the beſt terms France might allow us, would be found only an armed truce. His lordſhip then urged, that the continuance of the war was not (as had been aſſerted) contrary to the ſentiments of the people at large, who were as much convinced as ever of the neceſſity of ſupporting government in the war; as a proof of which, he obſerved, that had their ſentiments been different, they would have come with their united complaints to the legiſlature. He concluded by moving the addreſs; which was ſeconded by the earl of Beſborough.

The earl of Guilford (after noticing, in the moſt reſpectful terms of approbation, that part of the addreſs, which related to the approaching royal nuptials) obſerved, that he expected, that the ſyſtem of defeat, diſappointment and mortification, which miniſters had experienced ever ſince the ſubject was laſt agitated, would have induced them to bring forward ſuch an addreſs as might be unanimouſly adopted; but by the preſent, he ſaw that the ſame deſtructive ſyſtem was to be perſevered in. He had no objection to diſcuſs the queſtion, even on the principles laid down by the noble earl, and he doubted not but he could fairly adduce inferences decidedly oppoſite. The ſtatements which had been made reſpecting the relative ſituation of the countries were not founded in facts, but ſuggeſted to the noble earl either by ignorance or miſrepreſentation. As to the ſituation of the enemy, it was evident enough by its effects; and as for the pompous deſcription of the affairs of this country, it would have applied to a picture which he heard given about three years ago in another houſe with a colouring of eloquence which perhaps was never exceeded (alluding to Mr. Pitt's celebrated ſpeech on opening the budget of 1792). Our ſituation then, he ſaid, might have correſponded with the noble earl's eulogium; but by the diſaſtrous events which had ſince been brought about by the miſconduct or wickedneſs of miniſters, he was ſorry to be obliged to predict that the flattering deſcription at the period alluded to, was the *funeral knell* of Britiſh commerce and credit.

All this calamity was ſolely to be attributed to the plunging of the nation in a war, which was a continued ſeries of defeat, diſgrace, and diſappointment; nor were the objects aimed at by this ruinous ſyſtem leſs unjuſtifiable or impracticable. To attempt to impoſe a government

on France was not less wicked than absurd; the idea was now scouted even by the meanest individual in the country; and as to its being more improper now to offer or demand a peace, when we were brought to the verge of ruin, was not less ridiculous. With what prospect of success could the war now be prosecuted, when, in a former campaign, with every advantage on our side, with our people united at home in support of the war, when Toulon and the West India colonies of the enemy were in our possession, when the loyalists were numerous and in force in La Vendee, when Lyons and Marseilles were in a state of insurrection; when, with all these advantages, together with their Flemish and German frontier fortresses being possessed by our allies, we were not able to do any thing decisive against France; what more could be expected, when the situations of the two countries were completely reversed? He turned from the consequences with dread; but when he heard it contended that such was not a desirable situation for peace, he could not avoid indulging a degree of ridicule at such absurdity.

But granting that the present was not a proper moment for the cessation of hostilities, yet, in that case, he wished, out of evil to extract good; he would propose, that the internal concerns of France should be clearly and openly avowed not to be the object of the war.

He then entered into a comprehensive view of the operations of the war, of the whole of which he expressed his decided disapprobation, as resulting from the absurd and impolitic measures of ministers.

His lordship then alluded to the conduct of ministers, in endeavouring to have it imagined that serious plots had been in agitation against the constitution, and to render both houses of parliament a vehicle for proclaiming such ideas to the public; but he, and the noble lords who acted with him, had repeatedly asserted the futility of such notions; and the recent verdicts of English juries, and the conduct of government in enlarging the majority of those alledged criminals, without prosecution, had verified their predictions. He then moved an amendment, the substance of which was, a promise of support to his majesty in prosecution of the war, in such a manner as may be conducive of a speedy and honourable peace; and praying that the internal concerns of France may be no obstacle to such a pacification.

The earls of Morton and Kinnoul spoke against the amendment, which the earl of Derby supported. The latter dwelt on the circumstance of the separate treaty entered into by the Dutch, who were brought to such a situation as that peace alone could save them; and he touched upon the acquisition of Corsica, which, so far from being an advantage, would be found to be the reverse, as requiring an immense force and expence to retain it, even if this could be done; but in one point of view it certainly was an advantage, according to the present system of ministers, by enabling them to extend their patronage in the creation of a number of places for the government of that kingdom, which so far from being defrayed by Corsica, the entire expence would fall on Britain.

Earl Spencer contended, that a successful prosecution of the war was to be looked for. Our naval resources were great, if we called them into execution. What we were principally deficient in was men; and it was intended to make some extraordinary exertions to man the navy, from which he doubted not that every desired good would follow.—He disagreed with the noble earl in his opinion of Corsica: it was a valuable acquisition, particularly in a naval point of view; nor did he think it would be expensive to this country.

Marquis Townshend, lord Borringdon, and lord Mulgrave spoke for the address. The latter endeavoured to prove, that it would be easy to drive the French back again into their own territories; for that Louis XIV had penetrated as far as the Rhine, and was driven back as rapidly as he had advanced.

Earl Stanhope asserted, that administration were pursuing the same course of deception with which they varnished over their misconduct at the last session, for the purpose of creating an unjust war with France; that they had trumped up constructive treasons, and attempted to take away the lives of some of the best men in the kingdom. How ought they to take shame to themselves, in having been completely foiled in their wicked designs by honest and uncorrupt juries of the country! and now that the kingdom was precipitated into the most imminent danger, he supposed they must raise an army of brave *sans culottes* to defend it.

Marquis Townshend said, that the nobility and gentlemen had with infinite honour unanimously stepped forward, and raised a force sufficient to defend the kingdom, without any assistance from the noble lord's *friends and favourites*.

The earl of Mansfield took a very ex-

ſenſive argument to ſhew the extreme danger of ſuffering the northern boundary of France to be extended to the Rhine, with all the north weſt coaſt of Spain, and all the maritime part of Biſcay. He therefore hoped the war would be purſued with all poſſible energy, as abſolutely neceſſary to be continued until France was reduced within her ancient limits, and had ſettled a government with which England could treat.

Lord Lauderdale ſaid, that the arguments in ſupport of the war were weak and prepoſterous; for if the French were in that exhauſted ſtate in which they were repreſented, it was abſurd not to make overtures of peace, as they, conſidering their weakneſs and inability, would readily liſten to any propoſition of a pacific nature. He proceeded to remark with much aſperity on the king of Pruſſia, the treaty with Auſtria, &c. The confederacy, he ſaid, entered into by this country, was a tottering one, and our money was given to the king of Pruſſia for the moſt iniquitous purpoſe, viz. for ſubduing the unhappy Poles, and the odium and expence fell to the ſhare of this country. The French at Toulon were now ſuperior to our force in the Mediterranean; and to him it was aſtoniſhing, that after the example of America, miniſters ſhould be ſo infatuated as to purſue ſuch meaſures.

Lord Grenville urged the impoſſibility of making peace with the preſent exiſting government of France: the ſtate of anarchy in which the country was involved; that the very great efforts which France had made were impoſſible to be continued; and that in the end ſhe muſt be completely exhauſted; while, on our part, nothing was wanting but a vigorous proſecution of the war.

The marquis of Lanſdowne, made many obſervations on the ſtate of our army and navy, and on the general ſtate of politics in reſpect of France and the allies. He was convinced of the propriety of voting for the amendment.

The duke of Bedford ſaid, that the hackneyed argument, 'Whom can we treat with?' was ſo often urged, that it became perfectly ridiculous. He was convinced, that did England offer peace to France (and he ſaw no diſgrace in the offer) ſuch a peace as became England, it was the intereſt of France not to reject it.

On the queſtion for the addreſs, there appeared, contents 107, non-contents 13, majority 94.

The ſame day, in the houſe of commons, the bill for preventing clandeſtine outlawries being read as uſual, Mr. Sheridan, after apologizing for the ſeeming violation of the accuſtomed forms of the houſe, by ſeeming to obtrude a different matter, aſſured the houſe, it was not from any diſpoſition he felt to defer the reſpectful addreſs which was to be propoſed to his majeſty, for his gracious ſpeech from the throne; but that he felt it his duty to maintain the rights and privileges of his conſtituents, who could not imagine themſelves in the due enjoyment of them, as long as the habeas corpus act remained ſuſpended. That was the great bulwark which protected their liberties and perſonal ſafety; and nothing now remained to juſtify the continuation of its ſuſpenſion, ſince the iſſue of the late trials relieved us from the apprehenſion that any plots exiſted to endanger our conſtitution. He could not hold himſelf juſtified therefore, were he to poſtpone for a moment, what endeavour it was in his power to make for the repeal of that unjuſtifiable act. It was an odious monſter, which he could not permit to die a natural death. He ridiculed the efforts made by miniſters to keep up the bug-bear of alarm and conſpiracies, and declared it to be his intention to move immediately for the repeal of an act, that ſtigmatized the laſt ſeſſion of parliament; but he requeſted that ſome one of his majeſty's miniſters would previouſly inform the houſe if it were their intention to repeal it themſelves, or renew it at the time of its expiration.

Mr. Dundas gave it as his firm opinion, that nothing had occurred ſince the laſt meeting of parliament, that had induced him to believe, that the act then paſſed for ſuſpending the habeas corpus bill ſhould not ſtill be kept in force, and even renewed, if neceſſary, after the time it of courſe expired.

Mr. Jekyll reprobated the attempts that were made to ſilence the free diſcuſſion of political topics, and to prevent Engliſhmen from candidly expreſſing their feelings and opinions, by conjuring up among them nothing leſs than the terrors of a Baſtile.

The ſolicitor-general contended, that there was abundant matter of proof to ſubſtantiate the charge of high treaſon againſt the priſoners at the late trials; and that if it were not treaſonable to ſolicit and open a correſpondence with the French convention, and attempt to call together a convention in this country that was to

adopt the forms and opinions of that of France, he was at a loſs to define what ſhould be called high treaſon. He proceeded to animadvert rather ſeverely on the verdict given by the juries, and aſſured gentlemen, that if the jurors were as well acquainted as he was with the nature and force of the evidence, they would not have heſitated to find the priſoners guilty *(here much laughter, and cry of, hear him.)* So convinced even were the priſoners themſelves that there exiſted a treaſonable conſpiracy, that one of them (Mr. Tooke) confeſſed, and declared upon oath, that he did not diſbelieve the exiſtence of plots, but that the proofs were not ſufficiently ſtrong to convict the priſoners who were brought to trial.

Mr. Brandling interrupted the ſolicitor-general, and declared he could not hear in ſilent unconcern the diſorderly language of the learned gentleman, or his indecorous animadverſions on the proceedings of a court of juſtice, and the verdict of an Engliſh jury, whoſe rights he ſhould ever revere.

Here the ſpeaker delivered his opinion, that the ſolicitor-general was perfectly in order, as nothing had fallen from him that was not ſtrictly in reply to what was advanced by the gentleman whoſe obſervations gave riſe to the preſent converſation.

Mr. Fox touched upon the aſſertion of the learned crown lawyer, that if the juries on the late trials had been as well informed as he was of the force and convincing evidence of the proofs that there exiſted a conſpiracy, they would not have failed to find the priſoners guilty. Mr. Fox ſaid he perfectly coincided in opinion with the juries, and he did not feel a greater degree of conviction from the ſpeech of the learned gentleman this night, than they ſeemed to be impreſſed with from his wonderful exertions on a former occaſion. The juries had diſcharged their duty with integrity, and ſatisfaction to the public. Had it been otherwiſe, the lives of all would be precarious. Not one perſon that was indicted was found guilty. How then could the exiſtence of the conſpiracy be proved? I do not ſay the proſecutors were ſatisfied, ſaid Mr. Fox, but the public was. If there was a conſpiracy, it was not known. And why was it not known, before the country was reduced to ſuch a ſhameful and mortifying ſituation? If there be no neceſſity, why ſhould they recur to the old trick of alarm, when ſo many perſons whom they formerly ſuſpected and accuſed, have been found innocent? Whatever the learned gentleman might have ſuppoſed, the verdicts had ſurely proved that there was no conſpiracy; that is, no treaſonable conſpiracy—and if there were any other, ſince thoſe perſons were acquitted, it can be ſupported only by conjecture. Juries are not compoſed of placemen and penſioners; of men who are promiſed, or promiſe themſelves, peerages; nor do they, like the committee who furniſhed the report, look up to party connexions, or indulge themſelves with party expectations. I have gone more at length into this argument, ſaid Mr. Fox, than I intended, as all thoſe will do who feel deeply for the conſtitution. Remember, that the proſecutors maintained as advocates men who poſſeſſed the authority of judges. Had not the charges failed, we might have given a date to the exiſtence of our civil liberty, by trials by analogy. If it really be the intention of miniſters to continue the ſuſpenſion of the habeas corpus act, it is plain to ſee that there is nothing too deſperate for their ambition. When the day comes, the ſubject will, I hope, be properly diſcuſſed: in the mean time I ſhall give my vote for the repeal of the act of laſt ſeſſions; and I conſider the houſe and my country greatly obliged to my honourable friend for his endeavours to obtain it.

Mr. ſerjeant Adair conceived himſelf alluded to in ſome of the remarks that fell from the laſt ſpeaker. He was bold to ſay that whatever doctrines he maintained, were the reſult of cloſe examination and intimate conviction; that he ſcorned to conceal them; but that as a lawyer and a man, he confidently avowed them, and that were he capable of acting otherwiſe, he would deem it a diſgrace to the profeſſion to which he had the honour to belong.

Mr. Pitt, Mr. Fox, and Mr. Sheridan, reſpectively offered many remarks by way of explanation. The latter gave notice, that to-morrow he would ſubmit a motion to the houſe, for repealing the act paſſed during the laſt ſeſſion for the ſuſpending of the habeas corpus.

Mr. Sheridan then moved an inquiry into the nomination of a third ſecretary of ſtate, an office which he ſaid was aboliſhed by an act of parliament, commonly called Mr. Burke's bill. He here indulged in a ſtrain of raillery on the ſimplicity and diſintereſtedneſs of the right hon. ſecretary, whom he ſtyled the political Alcides, who, in ſpite of the vigour of his

habit, and perſeverance of his induſtry, confeſſed that he was ſo overpowered by the preſſure and variety of buſineſs he had to tranſact, that his nights were without ſleep, and his days without relaxation; and that all theſe accumulated exertions were generouſly made without the wiſh or expectation of any additional emolument.

The chancellor of the exchequer ſaid, there was no violation either of the letter or of the ſpirit of Mr. Burke's bill. There was no increaſe of emoluments or ſalary, and, conſequently, not the ſmalleſt foundation for the obſervations of the honourable gentleman.

Mr. Dundas begged leave to ſay, if he had enjoyed any emolument under the government as a ſecretary of ſtate, he ſhould have had no difficulty openly to avow it. He had poſſeſſed a very laborious and extenſive department, and was at laſt releaſed from the labour and from the emoluments of it. He aſſured the hon. gentleman he had received no ſalary for it. His majeſty had thought proper to put the greateſt part of that buſineſs into much abler hands; and he certainly felt, that the public had made a great acquiſition by the change. The noble duke diſcharged every part of that important duty with honour to himſelf, as well as with the greateſt advantage to the public; and he thought that the hon. gentleman who had formerly been ſo much in the habit of praiſing that noble duke, might, on that occaſion, have ſpoken of him in a different manner.

Mr. Fox ſaid, he thought Mr. Burke's bill did not apply to this caſe. The act which regulated this buſineſs did honour to the author of it (Mr. Burke) but he wiſhed to know whether this was to be the conſtruction of that bill, that there might be three ſecretaries of ſtate, provided two of them only were members of the houſe of commons.

The chancellor of the exchequer here obſerved as before, that Mr. Burke's bill was violated neither in the letter nor the ſpirit of it; as there was no extenſion of emolument or greater proportion of ſalary than formerly.

The ſpeaker proceeded to read his majeſty's ſpeech, when

Sir Edward Knatchbull roſe to move the addreſs, and was ſeconded by Mr. Canning. Both theſe gentlemen went over the ſame arguments that had been urged by the nobler movers in the other houſe. The latter inſiſted, that, though, in many inſtances, we had been unſucceſsful, none of the misfortunes which we had experienced during the laſt campaign, were imputable to miniſters: they were ſuch as no human prudence could foreſee, and no human power prevent? Moſt of them were to be imputed to the defection of our allies, and to the irreſiſtible force of our enemies; a force, of which hiſtory had no parallel. It might be ſaid, that government might have avoided many of the calamities of the war, if they had attended to the warnings and predictions which had been given by gentlemen on the other ſide of the houſe.

It was true, that they had foretold the deſertion of our allies, and the aſtoniſhing exertions of the enemy, and, unfortunately, the event had juſtified the prediction. But here he wiſhed to obſerve, that it was no difficult matter to propheſy evil: if the prediction proved falſe, gentlemen would feel too much ſatisfaction in the ſucceſs of their country to think of the prediction; if it proved true, thoſe who made it would triumph, as they would certainly feel ſome ſatisfaction in their ſuperior ſagacity.

When he thus candidly gave credit to thoſe gentlemen for their predictions, he wiſhed it might not be forgotten, that ſome predictions had been made by perſons who ſupported the war, and which had been equally juſtified by the event. That government which exiſted in France, and which had been repreſented as perfectly ſtable, had been ſtated by gentlemen on his ſide of the houſe, to be ſo conſtructed, that it could not poſſibly exiſt for any length of time. When Robeſpierre governed France with the moſt abſolute ſway, even then his fall was predicted, with how much juſtice the event has ſhewn.

When jacobiniſm was at its greateſt height; when its influence circulated through every part of the French government; when it ſeemed as the very ſource of motion in all their enterpriſes; even then its fall was foretold in that houſe, and, happily for humanity, with truth.

He wiſhed, however, not to be miſunderſtood: he did not mean that, by the acceſſion of the moderates to the ſovereign power in France, the poſſibility of our treating with them had become greater; becauſe the only difference between them and the jacobins was, that they poſſeſſed the intentions, though they had not the power of the jacobins. The hoſtility of the moderates toward this country was equal to that of the jacobins: the only

difference was, they had not the means of carrying it into execution.

But when he admitted that their exertions were great, he wished the house to consider at what an expence they had been made. From the reports of Cambon, the French financier, the expences of France since the commencement of the war, had been 303,000,000l. sterling; and since the commencement of the war with England, 260,000,000l. This enormous expence they had been enabled to sustain, by seizing all the property in the kingdom, and distributing out sustenance as a kind of donative to the people; and by raising, by the means of terror, the value of assignats; and depressing, by the same means, the price of purchasable commodities.

With respect to the present system of moderation, he was far from thinking that it was at all propitious to the interests of this country: he admitted that they did not carry on that wholesale trade in blood which had marked the reign of the jacobins: they were occupied in the more innocent employments of balancing accounts, and adjusting to each man his share of murder and of guilt. In order to form an idea of what terms of peace we could expect from the French, he wished the house to attend to the declarations which they had made: they had divided their enemies into two classes, viz. those who were the instigators of the war, and those who were compelled into the war.

Now the house would have an opportunity of judging what reliance we could have upon their moderation, by the terms which they would give to the Dutch, who were supposed to come within the latter description. If the terms which they gave to the Dutch were hard, what could this country expect, who were supposed to be the most determined to carry on the war, and whom the French, upon all occasions, seemed to speak of with peculiar enmity. It had been insinuated that the French would accede to a peace with Holland upon the ground of a *status quo*; but could this country, with any regard to its honour and dignity, consent to a peace on such terms? He wished it to be remembered, that we had taken under our protection people who, groaning under the effects of French tyranny, had fled to us for succour; would we then give them up to be butchered, while they were clinging round our knees for protection?

If, then, we could even now have a peace with France, it must be an insecure one: it must be a peace with all the expences of a war establishment. Such a peace, he was sure, this country would never assent to; and, therefore, he hoped he should divide with a very large majority for the address. Even if we were to have a peace with a war establishment, could it be supposed that the French would suffer us to keep up such an establishment without asking for an explanation, which would of course produce dissensions. The hostility of this country had already produced many changes for the better in France, and there was reason to hope that a continuance of the war would bring them to a state in which we could make peace with honour and security.

Mr. Wilberforce said, he felt much concern that he was compelled upon this occasion to differ from those with whom it had been the pride of his life to agree, but he was bound by a duty which he felt paramount to every other consideration. He had the greatest confidence in ministers, but he could not answer to his constituents, nor to his own feelings as a man, if he continued to support them after he ceased to approve of their measures. If there had been any thing like a pacificatory tendency in his majesty's speech; if there had been any thing which did not preclude the possibility of a peace, he should have been happy in being able to give his assent to it: he would at least have tried the experiment a little longer. But no such hope was held out: the speech, and the address moved, spoke a language too plain to be misunderstood. It was impossible for any gentleman to vote for the address, who was not to go the length of saying, that he would not make peace till there was a form of government established in France, according with his ideas of propriety and stability.

The honourable gentleman who had just sat down, hurried away by his own eloquence, had made assertions which it was impossible to maintain. He had said, the situation in which we were placed at present, was the same as when parliament separated last session; or, if there were any difference, it was not such a one as made it necessary for us to alter our objects. The view he had taken of affairs since parliament separated last summer, suggested to him many important differences in our situation. In the first place, the jacobin system, which was so hostile to the interest of this country, was destroyed; and though its principles were not so effectually eradicated as he could wish, yet the fountain head, from which those

deteſtable maxims had their ſource, which had deſolated France, and diſturbed the tranquillity of Europe, was, he hoped, effectually deſtroyed. In their room, another party had aſſumed the reins of power, which had for its profeſſed baſis, moderation. This was, at leaſt, the aſſumption of a virtue, if they had it not, and ſhewed what was the real opinion of the people of France, by a party thinking it neceſſary, in order to maintain their intereſt, to affect ſuch principles. This was an important event, which rendered our ſituation extremely diſſimilar from what it was at the cloſe of the laſt ſeſſion. But there was another, which he thought of equal weight, and that was, that the confederacy with which we had acted was now in a manner diſſolved. His majeſty's ſpeech informed the houſe, that one of our allies, for whoſe defence we entered into the war, was now upon terms of negociation with the French; and another of our allies, who had been of very little aſſiſtance to us laſt campaign, would probably give no more in the enſuing one.—This diſſolution of the grand confederacy appeared to him a circumſtance of great weight; while it exiſted, it muſt neceſſarily give confidence to the royaliſts and all the diſcontented parties in France, and of courſe in the ſame proportion muſt depreſs our enemies. But even when the confederacy exiſted in its greateſt force—when there were no leſs than forty-three inſurrections in the interior of France, even then we were unable to overcome them; then how could we expect, when the confederacy was in a great meaſure diſſolved, and when the inſurrections in France were nearly ſuppreſſed, that our ſucceſſes would be greater when our means were leſs? He confeſſed he began to entertain doubts as to the expediency of carrying on the war during laſt ſeſſion; and the circumſtance which firſt ſtaggered him, was, that during all the various revolutions in France, the army ſtill continued ſtaunch; they fought with equal alacrity, whatever party was paramount in France. But when he expreſſed his wiſh that the door ſhould not be ſhut againſt peace, he begged it might not be ſuppoſed that he wiſhed any ſtep ſhould be taken which would in any manner tarniſh the honour of England. His objects were extremely different; he wiſhed that this country ſhould diſplay its magnanimity by declaring itſelf not averſe to peace. It could not be ſuppoſed that ſuch a declaration on the part of England was the effect of diſtreſs: her power and reſources were too well known to admit of ſuch an idea; but if the French ſhould reject fair and honourable terms, the effect would be, to unite and give energy to this kingdom in the further proſecution of the war.

True magnanimity conſiſted, not in perſiſting even againſt conviction in an opinion once taken, but in candidly acknowledging an error when diſcovered. He begged gentlemen to conſider what our ſituation really was, and to aſk whether they thought the intereſt of the country would be better conſulted by a peace, or by a proſecution of the war. If they were of the latter opinion, he would then aſk, were there any ſubſtantial grounds upon which to expect ſucceſs in the enſuing campaigns? He was ſorry to ſay, the anſwer muſt be in the negative—Still leſs grounds were there to hope for a counter-revolution founded upon ſuch principles as we ſhould approve of. The preſent principles of France had now gained ſtrength by duration. New generations were coming into life with the moſt inveterate prejudices againſt the ancient government, and againſt monarchy in general: there was, therefore, but little hope of the reeſtabliſhment even of a limited monarchy in France. Indeed, to ſpeak his ſentiments plainly, he had rather they would adopt a form of government ſimilar to that eſtabliſhed in America. Another very important point, in which the ſtate of this country was altered, was in the ceſſation of the danger in which we formerly were, of the propagation of the deteſtable opinions broached in France. The good ſenſe of the people of England muſt have ſhewn them, that to reduce thoſe principles to practice, is to introduce every evil which can injure civil ſociety.

There were many accounts propagated of the diſtreſs to which the French were reduced, and of the total derangement of their finances: theſe accounts he was much inclined to diſtruſt, or even if they were true, he did not think ſuch ſtrong effects would enſue in our favour, as had been repreſented. He concluded by moving an amendment to the addreſs, 'To aſſure his majeſty, that we his faithful commons, are determined on granting to his majeſty liberal ſupplies, in order to enable his majeſty to act with vigour and effect, to ſupport his crown and dignity, and for the purpoſe of keeping good faith with his majeſty's allies, for which this

country has ever been eminently diſtinguiſhed, and notwithſtanding the diſappointments of the laſt campaign, they are convinced from the zeal of the people, who are ſenſible of the advantages they enjoy under the conſtitution of the country, and his majeſty's good government, that they may promiſe themſelves complete ſecurity, againſt foreign and domeſtic enemies. But on a full conſideration of the events of the war, and in conſequence of ſome tranſactions that have lately happened in France, and between the French and the States General, they think it is adviſeable that his majeſty ſhould order a negociation on ſuch terms, as to his majeſty's wiſdom and goodneſs ſhall ſeem juſt and reaſonable. But if, contrary to the wiſhes of his commons, that ſhould be declined by his majeſty's enemies, they are perſuaded the burdens of the war, will be borne with cheerfulneſs, by an affectionate and loyal people.'

Mr. Duncombe, the other member for Yorkſhire, ſeconded the amendment.

Mr. Burdon ſaid, he had been inclined to vote for the addreſs; but the amendment propoſed by the hon. gentlemen appeared to him ſo reaſonable and fair, that he ſhould ſupport it.

Mr. Windham entered into a long invective againſt the French revolution, and the effects to be dreaded from the propagation of jacobin principles. He urged the neceſſity of vigorouſly proſecuting the war, in order to preſerve the laws, and liberties, and conſtitution of this country; and he concluded with quoting a part of king William's ſpeech on an occaſion ſimilar to the preſent—'You have now an opportunity of preſerving the liberties of your country, and will then ſupport the ancient ſpirit of Engliſhmen.'

Sir Richard Hill ſpoke warmly for the amendment.

The chancellor of the exchequer declared, that he roſe with greater anxiety than he remembered to have experienced, ſince he had the honour of a ſeat in that houſe, finding, as he did, a difference of ſentiment in ſome of his hon. friends, from whom he had leaſt expected it.

His hon. friend (Mr. Wilberforce) had ſaid, that he would not vote for the addreſs as it ſtood; conceiving that he who voted for it pledged himſelf not to negociate with a republic. For his part, he did not conſider himſelf, though he ſhould vote for the addreſs, pledged to that extent; but that with the preſent government, if ſo it might be called, in France, it was impoſſible to treat with any ſecurity: and that they were by no means in a ſituation to compel us to the adoption of ſuch a meaſure. If that abſence of hope, which was held forth by his hon. friend, was to pervade the houſe, there would indeed be no chance of ſucceſs; but ſhould any great preſſure ariſe from the proſecution of the war, he, for his part, knew of no pledge created by voting for the addreſs, to prevent their yielding when the preſſure required it. He could very well ſuppoſe the poſſibility of a republic, even in France, with which a rational treaty might be made; but as a queſtion of opinion, he would ſay, that with the preſent rulers any ſatisfactory or ſecure negociation was very unlikely.

The original grounds upon which the war was commenced, with the almoſt unanimous concurrence of the houſe, were, by his hon. friend, allowed to remain unimpaired. His hon. friend would not, he hoped, forget the importance of the conteſt, which was again and again declared by the houſe to involve in its conſequences the intereſt and ſafety of this country; the intereſts and ſafety of Europe; the deſtruction of anarchy, cruelty, and impiety; the ſubverſion of our glorious conſtitution, that moſt hated, becauſe moſt effectual barrier againſt the unnatural and ferocious purpoſes of our enemies, which threatened the annihilation of all thoſe valuable, ſocial inſtitutions and eſtabliſhments that the aggregate wiſdom and labour of ages had erected, which gave ſyſtematic circulation to atheiſm, and refuſed toleration to morality and religion; a ſyſtem which waged hoſtility againſt all divine ordinances, held up a dreadful leſſon to the mind of any man of ſentiment or virtue, and particularly of his hon. friend, whoſe habits were ſo adverſe. His hon. friend muſt therefore have arrived at a great deſpair of the conſequences, or he certainly would have agreed to make a ſtruggle.

He ſaid, that the true point for the conſideration of the houſe was, whether, on a compariſon between the riſk we ran from ſubmitting to France, and the hazards we incurred by a continuation of the war, it was adviſeable to continue the war for another campaign or not. And in order to ſhew the preponderance of the negative on that queſtion, his hon. friend had ſaid that the recent change had done away in part the great objection. In anſwer to this, he would obſerve, that ſince the fall of Robeſpierre, there

perſons who had ſucceeded to the government, that is to ſay, to the diſpoſal of the lives, liberty, and property of the people of that unhappy country, exerciſed the ſame power, but in a different form; and, without at all changing the conſtitution, had made comparatively a more mitigated uſe of their power. But the houſe would allow, that he did not at all exaggerate, when he ſtated, that by getting rid of Robeſpierre, the French people had got into hands ſuperior to that monſter, only in the ſame degree that he was inferior to thoſe he had before cut off, namely, Briſſot and his party; and whoever compared them now, would find that ſet in a ſtate no better deſerving the name of moderation than Briſſot was, who was himſelf condemned for having driven France into an act of aggreſſion againſt this country.

In conſidering this point, it was not for the houſe to enter into an enquiry about names and forms: the queſtion was, what were the principles which directed our enemies? Their ſyſtem would be found to be built on the rights of man, liberty and equality, which in their nature are contrary to all governments, and particularly to the very eſſence of the Britiſh conſtitution; that chief reproach and contradiction to their government, which enthroned tyranny and put liberty in chains, while our's was formed for the preſervation of every thing valuable to man or ſociety. This accounted for their antipathy to our government.

With all thoſe doctrines for their creed, could any one believe that they would agree now to part with the favourite inclination which they had profeſſed two years ago, and ever ſince indulged, to propagate their principles all over the face of the earth. Ambition was allowed to be one of their great impelling motives. Could the houſe, could his hon. friend believe, that ſucceſs was ſuch a corrector of pride and ambition, that they would not retain their original intention, if they poſſeſſed the means of carrying it into effect? Could it be believed that they would ever agree to peace, if they did not ſee the moſt urgent neceſſity for it, or if the interval of a peace afforded them better means to execute their projects? Did the houſe or his hon. friend expect from them the return of cordial intentions, or fair cordial communication? Could they imagine that from ſuch perſons a reciprocation of good faith might be expected, ſo as to render caution on our part uſeleſs, and enable us to profit by retrenchment? Would the houſe, on their faith, agree to diſband our armies, to confide in their friendſhip, to put an end to the proviſions of the traiterous correſpondence bill and alien bill? He believed not.

What could be hoped from a peace, made without mutual cordiality? Nothing but ſuſpicion, fears, jealouſy, and perfidy; and was it politic for us, in order to avoid temporary difficulties, to make ſo diſhonourable and dangerous a conceſſion, and ſend it down with all its miſchiefs to poſterity, for whoſe ſafety and well being it was the duty of the houſe eſpecially to provide: If it was made, how long were they to hope it would be till it was broken, and war again rekindled? With how many more diſadvantages would they not come again to the conteſt? If our army were to be diſbanded, or our forces diminiſhed, they would at once put an end to the machine which had been conſtructing for two years—a time, from the nature of the country and government, barely ſufficient to mature and bring it to perfection, and deprive the country of the benefit of it, juſt as it was fit to be put in motion with certainty of effect. He called upon the houſe to compare the force and ſtrength of the country at this time and at the ſame ſtage of any former war, and it would be found, that though ſlow in progreſſive accumulation, it was more quickly accompliſhed, and far more conſiderable than any that have been hitherto known.

If a peace were made, this force muſt be diſbanded—and if impelled by the purſuit of their miſchievous projects, the French ſhould again bring a vaſt army (which they might, from their vaſt population, and their newly acquired military habits, eaſily do) we ſhould meet them with a diminiſhed force, have the ſame long and laborious proceſs to undergo in order to collect it, and effect it not only at an immoderate additional expence, but perhaps after ſome important or fatal ſtroke had been levelled at us.

But that which rendered it ſtill more dangerous to us was, that it would be as impoſſible for the French to diſband their army, as it would be neceſſary for us. 'What,' ſaid he, 'ſhall we ſacrifice all, juſt at the time that we have got a uſeful force?—Shall we diſſolve this confederacy, proclaim to the world our weakneſs, and thereby ſolicit attack, and in-

cur contempt and deteſtation? And if we do, and the war again begins, ſhall we find Auſtria, Spain, Italy, and the other powers of Europe who now make a common cauſe with us, ready to come at our ſummons?'

He wou'd ſuppoſe, for a moment, that the French attacked Holland, or Auſtria, or any other of the powers in alliance with us, and aſk the houſe upon what grounds they could hope to raiſe a force here for their defence, if they gave up their purpoſe from a ſuppoſed inferiority? He thought it peculiarly impolitic and dangerous to deſiſt at a time, when, as he would undertake to demonſtrate, the reſources, natural, and unnatural, of France, were verging with rapid ſteps to diſſolution—and when a ſhort interval of peace would only give the opportunity to our enemies, by new modes of plunder, to come againſt us with freſh means.

The danger of peace, he maintained to be worſe than war; and the object for which war was firſt undertaken, was attended at this hour with more impoſing neceſſity of vigorous proſecution than it was at the very commencement; as, if diſcontinued or ſuſpended, it would give the French time to breathe, and when we had occaſion again to face them (which he was ſure would not be a long time after) we ſhould have to contend with tenfold force with leſs ſufficient means. He obſerved, that it had been ſaid by one of his hon. friends, that if peace was made, it would lead to the deſtruction of the government of France. This he thought to be at leaſt doubtful—but if it was ſo very clear as gentlemen would inſinuate, he wiſhed to know whether it was likely that it would eſcape thoſe who had an intereſt in it, and who, having the power in their hands, would hardly ſuffer France to fall into that quiet ſtate which muſt lead to their own ruin?

Would they not ſee that if the army were recalled, having loſt all taſte for peaceful employment, it muſt be dangerous to them?—Would they not endeavour, in their own defence, to cruſh the ſmall remnant of order, juſtice, and piety, which was left in the interior? Would not thoſe moderate governors employ themſelves again in erecting a new throne of terror, and inſtead of being more harmleſs, become more furious and diabolical?

Would his hon. friend, or would even the right hon. gentleman oppoſite (Mr. Fox) himſelf, ſay, that England was in that ſtate under which ſhe ſhould agree to a peace, leaving the Auſtrian Netherlands in poſſeſſion of the French? In a few months after, Holland would certainly be added to that acquiſition, and in a ſhort time afterward, the ſword muſt be drawn again; and he put it to them to ſay, whether they in their conſcience believed, that a reſtoration of the Auſtrian Netherlands would be made part of the terms of peace?

The chancellor of the exchequer then adverted to our Weſt India conqueſts, and beſought the houſe to conſider, whether they would adviſe an act of national perfidy—betray thoſe who confided in them, and give them up to their murderers; or, on the contrary, yield them protection—a more noble cauſe of war than ambition or honour merely? Whether they would give the Weſt Indies up to the jacobins, and enable them, by the new mode of emancipation of negroes, to produce ſcenes in all our iſlands more dreadful than thoſe which that trade had already produced; they would, on the contrary, fight it out manfully—this would be the conſequence of the *ſtatus quo*—and yet how little probability was there that even thoſe terms would be granted?

He then adverted to the ſtate of the finances of France, and thence drew many ſtrong arguments in favour of carrying on the war. He ſaid it would indeed be very ſingular, if, becauſe a nation, in direct contradiction to hope and reaſon, had maintained a war of two years, and carried it on with a wild profuſion, which enabled them to aſtoniſh the world with their military achievements, that it was not to be determined when thoſe means would end; he, for his part, thought it a ſubject of reaſonable calculation.

They exiſted, he ſaid, by means as extraordinary as the events they brought about. Their pecuniary expences were beyond any thing ever known; ſupported by requiſition of perſon, life, and property; and they ſubſiſted only by terror. Every thing that weakened that ſyſtem, weakened their means, and as the adoption of moderation ſapped it on one ſide, ſo the perſeverance in attack could not but pull it down on the other.—'Take every part of it,' ſaid he, 'one by one, view their expenditure, and then ſee, whether terror is not the inſtrument by which they have raiſed their extraordinary ſupplies, and obtained all their unexampled ſucceſſes.'

He then ſtated, from unqueſtionable

documents of the convention's own ſhewing, that ſince the revolution their expenditures amounted to 480 millions ſterling; 320 millions ſterling in two years was the price of the efforts by which ſhe wreſted from the allies the conqueſts they had obtained.

But was this to be conſidered as the ſcale of what they could expend? Did theſe enormous ſums ariſe from an increaſe of revenue and from credit; or from an orderly ſyſtem of finance? Not at all: it aroſe from an unlimited paper credit; and all their own accounts concurred, in declaring, that, if carried any farther, it would be impoſſible to maintain it any longer, much leſs to augment it, by any further aggravations of the miſchiefs of plunder and confuſion.

Previous to the introduction of the utmoſt degree of terror, aſſignats were iſſued beyond the poſſibility of bearing, without diſſolution of the whole ſyſtem of paper credit; and while the circulating medium of the whole country amounted to no more than 90 millions in 1793, the aſſignats iſſued amounted to 130 millions ſterling; and at the ſame time, the price of all the conveniences of life roſe to an enormous height. The forcible meaſures brought forward and adopted for the temporary remedy of this grievance, did not bring into actual circulation above 130 millions, and thereby were reduced to half their nominal value; ſo that the Louis brought 120 livres in aſſignats, one-ſixth of their nominal value only. Then came into their aid the ſyſtem of terror; and the paradoxical experiment of credit founded on the baſis of fear—for from deſolation and diſtreſs they extracted ſuch ſums as could not be raiſed from the utmoſt confidence in the moſt opulent nation of the earth.

It might appear very extraordinary, how they contrived to carry into the receſſes of every houſe the impulſe of their engine, terror. A law was made by them enacting a penalty of 20 years impriſonment againſt any man who refuſed to take the aſſignats at the depreciated value of one ſixth, and at the ſame time, by an arbitrary maximum, to ſell their proviſions at a low fixed price. But means ſo violent could not be expected to laſt long, nor did it laſt.

In the days of Robeſpierre, the advocates for the French had ſaid, all this was done by the enthuſiaſm of the people; but it appeared afterward to be done by cruelty, by the revolutionary tribunal, and the indefatigable activity of the guillotine: that taken away, the aſſignats fell conſiderably.

One thing he would mention, on the authority of the French miniſter of finance, under the title of an article of economy, viz. in addition to the other engines of tyranny, they eſtabliſhed in every diviſion a deſcription of men, under the name of revolutionary committees, who were appointed to ſuperintend the execution of this law; they lived by plunder, and coſt no leſs a ſum than 26 millions ſterling.

Since, thoſe 130 millions aforementioned, inſtead of diminiſhing, have augmented to 260 millions ſterling; and their own account of the ſtate of thoſe in 1793, would give ſome idea of the effect likely to be produced by 260 millions. If then the ſyſtem of terror be done away, how could they ſubſiſt? A ſyſtem ſo unnatural could not ſubſiſt by natural means; as the ſyſtem relaxed, aſſignats decreaſed in value, and were charged at an immoderate diſcount by the ſervants of the convention themſelves. In two months after the death of Robeſpierre they fell to one-half, and lately to one-fourth of their nominal value.

In addition, he ſtated, that the members in the convention, even thoſe who were moſt oppoſite, concurred in declaring, that by the diminution of aſſignats their means were leſſened, and that they could only raiſe them by contracting their exertions, and diminiſhing their forces. And it ſhould be recollected this was their only reſource.—Was it then too much to ſay, their reſources were nearly at an end?

Beſide all this, they aſſumed unlimited power to ſeize, and arbitrarily convert all the cattle, proviſions, and produce of labour of every deſcription of people. By the ſame mode of requiſition, they raiſed their enormous armies; this was the main pillar of their force, and accounted for their miraculous operations. Here were proofs that their finances could not laſt.

What could they poſſibly reſort to for freſh ſupplies? Could it be ſuppoſed that when the forced loan failed at the time it was attempted, it can again be tried and ſucceed in a time much more unfavourable to it, when the ſyſtem of terror is almoſt diſſolved?

If preſſed, he ſaid, they muſt iſſue more aſſignats, and thereby add to their rapid depreciation; but if not preſſed, would uſe the interval of peace, to eaſe themſelves of the load, and lay up freſh means for war.

He ſaid, that ſuppoſe Holland did make

peace, and we had no actual assistant but the court of Berlin, he saw no reason for thinking that in the next campaign we should not succeed; and if we gave the Austrians pecuniary aid, and they joined us with our augmented army, he could see no reason why, with Spain and our other allies to make a diversion, we should not accomplish the important purpose—a purpose in the accomplishment of which, the happiness, almost the existence of Europe, entirely rested.

Mr. Fox declared, that late as the hour was, and exhausted as the patience of the house must now necessarily be, he found it his duty to say a few words on the present question; as he could not help remarking, with the sincerest regret, that administration were now urging the same arguments by which, in the course of last session, they had so fatally misled the house; and though public experience had convinced them of the fallacy of all their reasonings, yet they continued to repeat them with as much confidence as if they were borne out by the strongest facts in their favour.

He would only ask the right hon. gentleman, where could be the impropriety of attempting the issue of a negociation, and founding a pacification upon it? Had not Denmark, Sweden, the Swiss Cantons, and the United States of America, preserved peace with France; and had they not been as effectually saved from the contamination of French principles, as we could be by the most bloody and vindicative war? An hon. gentleman had talked of the successes of the French in very contemptuous terms, saying, that they had only taken a few walled towns, whereas, in truth, they had made conquests unequalled in the history of modern Europe; having overrun, in one campaign, the whole of the Austrian Netherlands, all Germany on the left side of the Rhine, and the finest provinces in the Spanish monarchy.

Mr. Fox then proceeded to argue on the absurdity of any further continuation of the war.

Our acquisition of Corsica, he said, although mentioned in the speech, had not been once noticed in the debate. The mode in which we had made the acquisition was curious. If it was valuable to the enemy or important to us, we might fairly take possession of it by right of conquest, as we had done of the West India islands; but we had not done so. We had done it in a way that illustrated the doctrine in Dr. Price's sermon, rendered so conspicuous by the notice taken of it in the Reflections on the French Revolution, a book of such excellence that a right hon. gentleman (Mr. Windham) had recommended reading it over again, having probably done so himself, as he had changed his first opinion of it. His majesty was once king of North America; he was now king of Corsica—In North America he had been *cashiered*, in Corsica he had been *elected*—so that the doctrine of electing kings, and cashiering them for misconduct, was not matter of dangerous theory, but of approved practice. Sir Gilbert Elliot convened the primary assemblies of Corsica, they chose delegates, who met with various other persons, and all had votes that came, so that the election, by his own account, was something very like universal suffrage. But this was not all—his majesty had previously determined not to withhold from the inhabitants of Corsica the protection which they sought for in their spirited efforts to deliver themselves from the yoke of France; and thus was made by his ministers to avow acting upon the famous decree of the French convention, holding out protection to the inhabitants of all countries who should make efforts to deliver themselves from the yoke of the government under which they lived—a decree which the mere circumstance of the convention having passed, without having ever acted upon it, was two years ago held forth as a sufficient cause of war with France. On the propriety of his majesty's accepting the crown of Corsica, without consulting parliament, he should say nothing at present; but he had much doubt of its ultimately conducing much to the honour of this country, or contributing to the restoration of peace.

Mr. Dundas said a few words in answer to what had fallen from Mr. Fox, relative to the West India expedition, and the conduct of lord Chatham.

Mr. Sheridan replied; and after a few words from Mr. Joliffe and Mr. Brandlyn, the question being loudly called for, the house divided, when there appeared,

For the amendment	73
Against it	246

The original motion was then put and carried.

[To be continued.]

FROM THE LONDON GAZETTES.

The London Gazette, January 6.

Horſe Guards, January 6.

BY diſpatches received from general Walmoden and lieutenant-general Harcourt, dated Arnheim, Dec. 29, 1794, it appears, that on the 27th the enemy, conſiſting of about 16,000 men, made a ſucceſsful attack on the Bommel Waert, and the Fort St. Andre, from which the Dutch forces were obliged to retreat to the lines between Gorcum and Cuylenberg, which they now occupy; and that the enemy on the ſame evening croſſed the Waal, and took poſition at Thuil, Wetteren and Wartenberg.

Admiralty-office, January 7. A letter was this day received from captain Newcome, of his majeſty's ſhip the Orpheus, to Mr. Stephens, ſecretary of the admiralty, dated in Madras road, the 25th of July 1794, of which the following is an extract:

On the 5th of May, captain Oſborne, of the Centurion, made the ſignal for a ſail, and captain Pakenham, of the Reſiſtance, for ſeeing two; Round Iſland bearing ſouth-weſt by weſt, ſix or ſeven leagues. I lay-to till the ſtrange ſails ran down ſo near to us that we could lay up for them; I then made the ſignal to chace: at forty-five minutes paſt eleven, I got near enough to fire a ſhot at the ſhip; at fifty-five minutes paſt eleven I brought him to action, and by a little after twelve I got cloſe upon his ſtarboard quarter, where we kept, till five minutes paſt one, ſo very cloſe, that at times I expected to be on board; and at that time the enemy ſtruck, the Centurion and Reſiſtance about three miles aſtern, under a great preſs of ſail, coming up. She proves to be a French frigate, called La Dugnaytrouin, of thirty-four guns, and formerly the Princeſs Royal Eaſt Indiaman, fitted out at the iſle of France, with twenty-ſix eighteen-pounders, two nine pounders, and ſix four-pounders, having four hundred and three men on board. I cannot ſay too much in praiſe of the ſteady, cool, and brave conduct of the officers, ſeamen, and marines of his majeſty's ſhip Orpheus. Our loſs is very inconſiderable, conſidering the ſuperior force of the enemy: Mr. Singleton, midſhipman, killed; Mr. Staines, mate, badly wounded in his left hand; and eight ſeamen ſlightly. The enemy's loſs was twenty-one killed and ſixty wounded.

I muſt beg leave to recommend to their lordſhips notice lieutenants Broughton and Goate, alſo Mr. Staines, who commanded the guns in the abſence of lieutenant Hodgſkin, who was unfortunately on board the Daniſh ſhip, with one mate, one midſhipman, and twenty ſeamen. At the time the ſhip ſtruck we were about two leagues from the paſſage between Flat Iſland and Coin au Mire, and one league from the ſhore; the other ſail, a ſmall brig, made her eſcape through the channel, and got ſafe into Port Louis.

Finding the bowſprit ſhot through and through, and three of the knees of the head entirely cut away, the diſtreſſed ſtate of the Dugnaytrouin, from ſickneſs and want of water, obliged me to ſeek the firſt port; and on the 16th of May, I anchored with his majeſty's ſhips at Mahe, one of the Sechelle iſlands. Finding the French had formed a ſettlement, and no refreſhments to be procured, I ſummoned the place to ſurrender, and ſent lieutenant Goate, with lieutenant Matthews, and a party of marines, and took poſſeſſion of it the next day for his Britannic majeſty. Not thinking it of ſufficient conſequence to leave any force, I quitted the place, having taken the republican flag and all the military and naval ſtores, alſo the brig Le Oliwere, leaving the implements of agriculture, for building houſes, &c. for the uſe of the poor inhabitants.

From the very ſickly ſtate of many of the French priſoners, and almoſt a certainty of their dying if embarked to proceed to Madras, I was induced, from motives of humanity, to leave behind ſeveral officers and men, having written to Mr. Malartie, governor of the iſle of France, to requeſt he would releaſe the ſame number of our priſoners, and of the ſame rank as thoſe that I had left at Mahe; about 140 more deſerted and got into the woods. The 28th, I made the Reſiſtance's ſignal to chace, and ſhe brought in the Deux Andres, from Mefambique, loaded with 408 ſlaves. The 1ſt of June, I ſailed with his majeſty's ſhips and prizes, and on the 18th anchored at Madras.

A London Gazette Extraordinary, publiſhed January 16, announced the arrival of diſpatches from general Walmoden and lieutenant-general Harcourt, communicating the particulars of the military operations in Holland from Dec. 30 to Jan.

8, which are detailed in the following reports and letter:

Copy of a Report from Major General David Dundas to General Count Walmoden, dated Tuyl, Dec. 31.

Agreeable to orders I received on the 27th, about ten in the morning I communicated with general Wurmb, and all the troops were put in motion immediately, viz. four battalions and four ſquadrons of Heſſians, under general Wurmb; ten Britiſh battalions, La Chatre's Emigres, ſix ſquadrons Britiſh light cavalry, and 150 huſſars of Rohan, divided in brigades, under major-general ſir Robert Lawrie, major-general lord Cathcart, major-general Gordon, and lieutenant-colonel Mac Kenzie.

At Geldermalſen, lord Cathcart, with four battalions and Rohan's huſſars, ſtruck off from the Britiſh column to march upon Rumpt and Haaſden, ſo as to get behind Tuyl. The reſt of the Britiſh column proceeded by Metteren; and exactly at day-light meeting the Heſſian column near Waardenbourg, attacked the enemy in their poſt of Tuyl, with ſuch reſolution and gallantry of the troops, that it was very ſoon carried, notwithſtanding its natural ſtrength, the abbatis that were made, the batteries of the town of Bommel, which flanked the approach, and the conſiderable number of men who defended it, who were driven acroſs the river (every where paſſable on the ice) with loſs of men and cannon.

I incloſe the return of the killed and wounded of the Britiſh.

Return of the killed and wounded.

Total. 1 field officer, 5 rank and file, killed; 1 officer, 1 drummer, 12 rank and file, wounded; 1 ſerjeant, miſſing.

Names of the Officers killed and wounded.

Brevet major Murray, 78th regiment, killed; lieutenant Lindſay, ditto; wounded.

Copy of a Report ſent by Major-general David Dundas, dated Buren, Jan. 6.

Sir,

I have hitherto been unable to acquaint you, that about two in the afternoon of the 4th, the enemy attacked our poſt at Materen, about a mile in front, where half of the 33d regiment, with a picquet of eighty cavalry, and two curricle guns, were poſted: their number and diſpoſition to ſurround the poſt ſoon made it neceſſary to fall back on the other part of the regiment, which was ſupported with two howitzers. In this movement they were hard preſſed by a large body of the enemy's huſſars, that galloped along the road with great vivacity. The troops having beforehand been in an alert ſituation, the village of Geldermalſen was ſoon covered by the 42d and 78th; the 33d took its place in the line of defence, and the other troops were in reſerve on the oppoſite dyke of the Linguen, the river being completely frozen, and paſſable every where. The enemy ſtill perſevering in their attack, advanced on the village both in front and in flank; but after a great deal of muſquetry firing for above an hour, were every where repulſed by the ſteadineſs of the troops, and retired upon Metteren, through woody and incloſed ground.

Every praiſe is due to the infantry that was engaged, and by the particular firm and cool behaviour of the advanced companies of the 78th, the progreſs of the enemy's cavalry was firſt checked.

I have the honour to incloſe a liſt of the killed and wounded on this occaſion, and remain, ſir, &c.

(Signed) DAVID DUNDAS.

Lieutenant-general Harcourt.

Total of the killed, wounded, and miſſing, of the troops under the command of major-general Dundas, at Geldermalſen, the 5th of January 1795.

3 rank and file, 1 horſe, killed; 1 general officer, 2 captains, 1 ſubaltern, 54 rank and file, 1 horſe, wounded; 1 ſerjeant, 6 rank and file, 9 horſes, miſſing.

Officers wounded.

Major-general ſir R. Lawrie.
33d foot. Captain W. Elliot.
42d foot. Lieutenant Colin Lamont.
78th foot. Captain Duncan Munro.

Extract of a Letter from the Honourable Lieutenant General Harcourt, to his Royal Highneſs the Duke of York, dated Head-quarters, Doorn, Jan. 10.

I loſe no time in acquainting your royal highneſs that the enemy this day, having croſſed the Waal in conſiderable force, attacked our line at ſeveral points of it: one column paſſed at Pannerden, and was immediately repulſed; another paſſed near Gent, and, after maintaining itſelf for a ſhort time, was likewiſe checked; a third paſſed near Nimeguen, and, in conjunction with two or three columns who croſſed between Thiel and Fedewaart, attacked the whole of our line on that ſide. They

forced the Auſtrians to abandon Heuſden, and retreat acroſs the Leck, and obliged the Hanoverians, with general Coats' brigade, and ſome Auſtrians, to fall back upon Lent, which upon the arrival, they found occupied by the enemy, and, in conſequence, retreated acroſs the Lingen, where they maintained their ground behind that river near Elſt; which poſition they ſtill occupied at the cloſe of the day.

Lieutenant-general Abercromby, who was marching upon Echield to diſlodge the enemy from that poſt, upon their making theſe attacks upon his left and rear, immediately halted, and finding both the Hanoverians and Auſtrians forced on the flanks and rear, retreated acroſs the Leck, and now occupies the heights near Rhenen.

I have the honour to incloſe the reports which I have received from generals David Dundas and lord Cathcart, of the affair on the 8th, together with the return of the killed and wounded.

Sir,

I have the honour to acquaint you that, in conſequence of a direction from lieutenant-general Abercromby; and as a part of the general intended forward movement indicated to me, I ordered the 27th and 14th regiments to march from Aulenberg early in the morning of the 8th, and endeavour to repoſſeſs Thiel, which was then in the hands of the enemy.

On the arrival of theſe two regiments at Bueren, lieutenant-colonel Buller found all our advanced poſts fallen back, and the enemy in a conſiderable body marching on to Bueren. He immediately took poſſeſſion of the town and caſtle, and waited the arrival of the head of the troops under my command, who had repaſſed the Rhine, and were on their march to arrive at the rendezvous of Buerep. Our out poſts, which were on the road to Geldermalſen, were neceſſarily ſupported, and major-general lord Cathcart, with the 14th, 27th, and 28th regiments, after an attack of ſeveral hours, drove the enemy oppoſed to him (800 infantry, two ſquadrons, and a piece of cannon) beyond the village of Geldermalſen, and there took the piece of cannon. For the particulars I beg leave to refer to lord Cathcart's report, to whoſe able conduct, and to the ſteadineſs and gallantry of the troops, ſo conſpicuous on this occaſion, we are much indebted. Our loſs has been conſiderable, a liſt of which I incloſe. I have the honour to be, &c.

(Signed) D. DUNDAS, M. Gen.

The hon. lieutenant-gen. Harcourt, &c.

SIR, Bueren, Jan. 9.

ON receiving your commands to reconnoitre the enemy, by whom the picquets toward Geldermalſen had been driven in, and to replace a poſt oppoſite to that place, I took a detachment of thirty hulans, with the light companies, and a detachment of the 27th regiment, and advanced on the dyke: the hulans charged the advanced guard of the enemy, and purſued them to Buremalſen, where they killed ſome men, and from whence they alſo brought back priſoners, under cover of the infantry which flanked the road. Finding that the enemy at that time near me did not amount to more than 800 men, with ſome huſſars, and one piece of cannon, I determined immediately to diſlodge him, and accordingly brought up the remainder of the 27th regiment, the 14th regiment, and two field pieces. The 14th regiment formed on the ice on the left of the dyke, and the 27th acroſs the incloſures on the right, ſupported by the picquets, by the detachment of hulans, and afterward by a ſquadron of light dragoons. The field pieces were on the dyke, and were with great gallantry and judgment protected from the enemy's tirailleurs by lieutenant Elrington of the 14th, who advanced before them with the grenadiers of that regiment. The troops marched in this order as expeditiouſly as poſſible, driving the enemy before them. By the time they arrived at Buremalſen the enemy had paſſed the river, and were collected at Eldermalſen, from whence they kept an inceſſant fire of muſquetry and grape ſhot.

The Britiſh line advanced without any halt, and the 27th regiment, gradually changing its direction to the left, as it approached the mill, at once charged the village acroſs the ice beyond the burned bridge, and ſeized the cannon, while the 14th regiment entered it on the right. The enemy retired with great precipitation, but ſoon returned in much greater numbers, and, notwithſtanding the fire of the field pieces from the oppoſite ſhore, made repeated attacks upon the village in which the regiments were poſted. The ſteady countenance of the troops in the village, however, reduced theſe attacks to a diſtant firing. The gun taken, which was a very fine long braſs eight pounder, French, was ſunk in the river by the ice breaking under it. On the arrival of the 28th, that regiment immediately formed on each ſide of the windmill, with their field pieces, and the regiments in the village were ordered to repaſs the Lingen,

and form behind the dyke; this movement was executed with the greateſt regularity, and they paſſed through the interval of the 28th in good order, and without leaving a man, though followed to the end of the bridge by great numbers. The 28th could not be placed ſo as to cover this paſſage effectually, without being expoſed to a heavy fire, which they preſented themſelves to, and returned in the moſt ſoldier-like manner. Their fire, and that of their guns, again cleared the village, and about ſun-ſet all firing ceaſed, and the brigade remained in the poſition until eleven o'clock, when I received our orders to march.

Theſe regiments have all been diſtinguiſhed for their gallant ſervices, one of them on very recent occaſions; but I imagine they never can have ſhown more cheerfulneſs, more diſcipline, or better behaviour, than on this affair. I am ſorry to add, our loſs has been conſiderable.—No officer ſlightly wounded quitted his poſt; but I join with every officer and ſoldier in lamenting the ſevere wounds which lieutenant-colonel Buller and lieutenant-colonel Alexander Hope have received. I am particularly indebted to theſe officers, as well as to colonels Gillman and Paget, for the manner in which the directions given to them were executed; and I have to acknowledge the moſt active aſſiſtance given to me by my aide de-camp, captain Kirkman, and the other officers attached to me.

I add a return of the killed, wounded, and miſſing, and have the honour to be, with the greateſt reſpect, &c.

(Signed) CATHCART, M. G.

To major-gen. D. Dundas.

Total of killed, wounded, and miſſing, of the troops under the command of major general lord Cathcart, on the 8th of January.

2 lieutenants, 1 enſign, 14 rank and file, killed; 3 lieutenant-colonels, 1 major, 2 captain, 2 lieutenants, 3 ſerjeants, 111 rank and file, wounded; 7 rank and file, miſſing; 3 horſes killed.

GEO. DON, Dep. Adj. Gen.

Names of officers killed and wounded.

Killed.

Lieutenant O'Connor, and lieutenant Norbury, and enſign Kelly, 27th regiment.

Wounded.

Lieutenant-colonels Buller, (ſince dead) Gillman, 27th regiment; lieutenant-colonel Hope, 14th ditto; brigadier major Wilſon, 27th ditto; lieutenant Raitt, 42d ditto.

The London Gazette Extraordinary, Sunday, January 18.

Horſe Guards, Jan. 18, 1795. By a letter from lieutenant-general Harcourt, to his royal highneſs the duke of York, dated head quarters, Doorn, January 13, which has been communicated by his royal highneſs to Mr. ſecretary Dundas, it appears, that a thaw had ſet in on the Sunday preceding; and ſo late as Monday evening afforded reaſonable grounds to hope, that in a few hours the paſſage of the Rhine would become ſufficiently difficult to enable the army to maintain its poſition; but that unfortunately the froſt had again returned with great ſeverity, and that preparations were making in conſequence for putting the army in motion, with a view of croſſing the Yſſel.

The London Gazette Extraordinary.

Horſe Guards, Jan. 19.

DISPATCHES, of which the following is an extract and copy, have been received from general count Walmoden and lieutenant-general Harcourt, by his royal highneſs the duke of York, and tranſmitted by his royal highneſs to the right hon. Henry Dundas, one of his majeſty's principal ſecretaries of ſtate.

Extract of a letter from general Walmoden to his royal highneſs the duke of York, dated Voorthuiſen, Jan. 16.

Since my laſt diſpatch the enemy have made ſeveral movements, indicating a deſign of a general attack on our poſts, rendered more eaſy by the unfortunate loſs of Heuſden.

On the 14th inſtant, they attacked all the points of our line, from Arnheim to Amerongen. The moſt ſerious attempt appears to have been directed againſt Rhenen, on which the advanced poſts had fallen back from the other ſide of the river. Theſe poſts were, however, immediately recovered and preſerved by the brave and ſpirited conduct of the Britiſh guards, and

of Salm's infantry; of the former, in particular, I cannot express myself in terms of sufficient commendation; each of these corps had two officers slightly wounded.

The intentions of the enemy against our position between Cuylenberg and Rhenen being now manifest, the right wing of the army effected its retreat on the night of the 14th to Amersfort and its environs; the remainder of our position, including the Grep, is still occupied by general Hamperstein, who will remain there till to-morrow, or the day after if possible. This day we shall march to Appeldoren, where the army will rest one day, and on the following we shall cross the Yssel.

Head-quarters, Voorthuisen,
SIR, January 16.

I have the honour to inform your royal highness, that on the 14th the enemy attacked all our out-posts between the Leck and the Waal in force. They were, however, repulsed on every point, especially by the picquets opposite Rhenen, upon which they advanced in very superior numbers. The conduct of the guards and other corps, whose picquets were engaged, was as steady as it was spirited; and I am happy to add their loss was trifling. Colonel Leslie and captain Wheatly were slightly wounded, and about 20 men wounded and missing; none killed. The posts of Eck and Maurik, in front of Amerongen, were afterward drawn in, but without loss. The enemy likewise made a slight attack toward Arnheim, but without further effect than obliging the post of Elden to fall back nearer the river.

In consequence of the arrangements which were taken, the army began their march on the night of the 14th, and have continued it without the least interruption from the enemy.

We have succeeded in getting off the sick, all but about 300, whose cases will not admit of removal, and with whom I have left proper officers and attendants, with recommendatory letters to the French general, and a sufficient sum of money to supply their wants at present. The wounded officers have all been got off, and, I trust, a very small proportion of stores and ammunition will be left.

I have the honour to be, with the greatest respect, &c. WM. HARCOURT.

P. S. As the messenger goes through Holland, and I do not know how far he may do it with safety, in a public character, I have judged it necessary that he should take only such letters as he can put in his pocket, and have therefore deferred sending the army letters.

HISTORICAL CHRONICLE.

JANUARY 1.

YESterday, at 12 o'clock, the powder-mills at Dartford, blew up, belonging to messr. Payne and Andrews. The explosion shook most of the houses in that town.

JANUARY 6.

This day, the letters by the Sugar Cane were received at the India House. This ship left Madras, July 27, and brings the following advices: captain Doveton, with the two hostage princes, set off from Madras, on the 27th of February, and arrived in Tippoo's camp at Devanelle, on the 29th of March, with a salute of 21 guns. The next day he had an audience with Tippoo, who made use of the strongest expressions of friendship for the English government; and while captain Doveton remained in his camp, he received every mark of attention and respect; and when he left Devanelle, a person of very high consequence accompanied him back to Madras.

Captain Doveton has given the following account of the reception of the young princes by their father; on their arrival at the camp, with their numerous suite, accompanied by captain Doveton, they proceeded on their visit to the sultan, who received them in a very superb pavilion, inclosed within a wall of a very extraordinary extent. He was seated at one extremity, and on each side, at suitable distances, were placed, according to their several ranks, about forty or fifty of his principal attendants.

On their entrance into the pavilion, the young princes sprung forward to the throne where their royal father sat, and prostrated themselves before it. And here the etiquette of Asiatic courts put nature completely to flight; for the father, instead of advancing to embrace his darling children, contented himself with coldly placing a hand on the neck of each; and on the instant the princes arose, and respectfully retired. It is a remarkable fact, that not a syllable was exchanged at this extraordinary interview.

Captain Doveton was next presented, and placed on the right hand of the sovereign, who conversed with him on Euro-

pean topics for more than an hour and a half. He was afterward regaled with betel, cloves, and a variety of Aſiatic dainties, on a ſervice of gold plate.

The ſultan, during the interview, did not riſe from his ſeat, which was a ſquare cuſhion, covered with crimſon velvet, richly embroidered with gold. On his ſide was placed a ſword, and ſome papers, and on them a gold ſnuff box, apparently of European manufacture.

Tippoo has a very majeſtic deportment, and is of the middle ſtature, with a countenance very expreſſive. His eye particularly animated and ſcrutinizing, his noſe large, with oblique dilated noſtrils; his mouth ſmall, with thick lips, and an eminence toward the centre of the upper lip, which projects, but is by no means unhandſome.

JANUARY 12.

This day, Mr. Martin, impriſoned on a charge of high treaſon, was taken from the Tower, to Mr. juſtice Lawrence's houſe, in Bedford-ſquare, and there diſcharged from his impriſonment, but was thence eſcorted to his former lodging in the King's-bench.

Plymouth, Jan. 11. This morning arrived the Boyne of ninty-eight guns, rear admiral ſir John Jervis, from Guadaloupe, whence ſhe ſailed about ſeven weeks ago, a ſingle ſhip. She was relieved by the Majeſtic, of ſeventy-four guns, rear admiral Caldwell, a few days before, which ſhip arrived there in company with the Theſeus and Bellona, of ſeventy-four guns each.

General ſir Charles Grey, came home paſſenger in the Boyne, and landed here this afternoon.

JANUARY 13.

Yeſterday, a proclamation was iſſued, for a general faſt in England, on Wedneſday February 25; and, in Scotland, on Thurſday February 26.

Portſmouth, Jan. 13. In purſuance of the ſentence of a court martial held on board his majeſty's ſhip Stately, the hon. admiral Cornwallis, preſident, the following men were this day executed on board the Culloden, for being the principals concerned in the mutiny on board that ſhip, viz. Francis Watts, Cornelius Sullivan, Jeremiah Curtain, John Johnſon, and Joſeph Collins. Three were hung on the ſtarboard, and two on the larboard foreyard arm. All the chaplains of the fleet had orders to attend them. They behaved very penitently, and admitted the juſtneſs of their ſentence; exhorting all the ſhip's company to take warning by their unhappy end, and never more to be concerned in mutiny or diſobedience to their ſuperior officers. David Hyman, Samuel Trigge, and James Morriſh, who were condemned with the others, yeſterday received his majeſty's pardon, and were put on board three different ſhips.

JANUARY 20.

Yeſterday, at twelve o'clock, two veſſels lying in a tier juſt below London-bridge, broke from their moorings, and the tide running up, they drove againſt the bridge, when one ſtuck faſt on the ſtarlings, and the other making directly to the centre arch, carried away all her three maſts againſt the top of the bridge, bent the lamp iron, broke two of the lamps, and paſſed through with a horrid craſh. The crew took to their boat before ſhe got to the bridge; ſhe then drove with the tide through Blackfriars-bridge above Somerſet-houſe, where ſhe went on ſhore, and now lies a complete wreck. The other veſſel was got off the ſtarlings at the turn of the tide, with little damage.

JANUARY 21.

At a meeting of the ſociety of the friends of the people, held at Free Maſon's tavern on Saturday laſt, it was determined, in conſequence of the danger of the country, to ſuſpend, for the preſent, all proceedings on the ſubject of parliamentary reform.

JANUARY 23.

On Wedneſday, the lord mayor held a court of common-council, at which were preſent the recorder, 16 aldermen, the ſheriffs, and 200 commoners. Mr. alderman Newman opened the buſineſs for which the court was called, and moved, 'That this court do preſent a dutiful and loyal addreſs to the throne, expreſſive of its firm and ſteady attachment to his majeſty and family, and of its veneration for and anxious ſolicitude to preſerve our excellent conſtitution, as eſtabliſhed at the glorious revolution; and moſt humbly and earneſtly to beſeech his majeſty to employ every means he in his wiſdom ſhall judge expedient, and conſiſtent with the honour and dignity of the ſtate, to terminate the preſent moſt deſtructive and calamitous war, that the bleſſings of peace may be reſtored to the country, which this court is perſuaded is eſſential to its trade, commerce, and proſperity.

Mr. deputy Brewer ſeconded the motion.

Mr. deputy Birch moved an amend-

nt, by leaving out all the words after words 'glorious revolution,' and ſubſtituting the following, viz. 'and to intain it againſt all ſuch attempts as ve lately been made to ſubvert it, and expreſs our juſt confidence, grounded his majeſty's uniform and benevolent icern for the intereſts of his people, t his majeſty will employ ſuch means ſhall be moſt proper to defend this ntry againſt its foreign and domeſtic mies, and to reſtore to us the bleſſings peace, whenever it can be done conently with the honour and dignity of ſtate.'

Long debates enſued, which motion uld be adopted, when at length the ority carried his amendment on a divi-, 243 againſt 47. A committee was n appointed to draw up an addreſs, ich being done, after ſome few objecs being made, was agreed to, and the riffs were deſired to wait on his majeſ- to know when the court may attend s therewith.

Plymouth, Jan. 20. A king's meſger arrived this morning, at five o'ck, to admiral ſir Richard King, with lers to lay an embargo on the ſeven itch men of war in the ſound, and alſo about 60 ſail of merchantmen, includ- five Eaſt Indiamen, worth altogether out two millions and a half ſterling. r men of war in the ſound are moored the Dutch men of war, to prevent m from ſailing.

[An embargo is alſo laid on all the itch ſhipping in the ports and harbours Great Britain and Ireland; and our ps of war have received orders to bring all Dutch veſſels they may fall in with any latitudes.]

JANUARY 23.

The moſt dreadful fire that ever happed in Liverpool was on Sunday morn-. At five o'clock the Exchange was covered to be on fire, the inſide of ich was entirely deſtroyed in leſs than o hours. With the greateſt difficulty town records, regalia, &c. were preved from the flames, though kept on oppoſite ſide of the building whence fire brok out, ſo rapid was its proſs. In leſs than one hour and a half whole roof fell in.

JANUARY 24.

On Tueſday evening, about a quarter t nine, the prince of Orange arrived Colcheſter from Harwich, where he had ded that afternoon. He came from xeling in an open boat, with only three men and a boy to navigate her. He has been at the White Hart Inn ſince his arrival, but to-morrow he takes up his reſidence at the houſe of Iſaac Boggis, eſq. of that town, lately prepared for the reception of the princeſs of Wales.

The hereditary prince of Orange likewiſe arrived at Colcheſter on Tueſday afternoon, and immediately ſet off for Yarmouth to meet his royal mother, his conſort the hereditary princeſs, and her infant ſon, who had landed there on Monday. They all ſafely arrived at Colcheſter, on Wedneſday evening, at twelve o'clock.

On Friday, about a quarter before twelve, the mayor, aldermen, aſſiſtants, and common-council of Colcheſter, attended by ſome of the principal inhabitants, waited on the ſtadtholder, with a conſolatory addreſs, expreſſive of their concern at the calamitous events which had forced him, for the preſent, to quit his dominions; their hope that Providence would ſoon put an end to the uſurpations of an ambitious enemy; and their aſſurance, that in this country he would find that ſympathy and attention which characterize the nation. The company were received in the moſt gracious manner by his ſerene highneſs. The addreſs was read by Francis Smythies, eſq. town-clerk.

While at Colcheſter, the ſtadtholder, the hereditary prince, and the prince of Heſſe Darmſtadt, frequently ſpent their time in walking about the town, and ſeemed highly ſenſible of the marked attention and reſpect paid to them by all ranks. They ordered articles of clothing, of every deſcription, to be made up for them by the different tradeſmen.—Prince William George Frederic, the ſtadtholder's ſecond ſon, his daughter the princeſs Louiſa Wilhelmina Frederica, and count Bentinck, were alſo at Colcheſter.

Yeſterday, the recorder made his report of the priſoners under ſentence of death in Newgate, convicted in laſt September ſeſſion, when the three following were ordered for execution, on Thurſday the 29th inſt. viz. Patrick Murphy, for a rape; Joſeph Strutt, for riotouſly beginning to pull down a houſe; and Francis Roſs, for forgery. [*See Vol. XCV, page* 228.] William Mollineux, for ſetting fire to the houſe of Heſter Moon at Stepney, was reſpited until the 25th of March.

The following were reſpited during

pleaſure, viz. John Catapodi, for forgery; Anthony Purchaſe, Richard Warmbeck, and Thomas Biggett, for attempting to pull down certain houſes [*See Vol. XCV, page* 228]; Henry Creamer, for perſonating the executor of a ſeaman; Thomas Bayley, for ſtealing ſix ſilver table ſpoons, and other articles of plate, in the houſe of Mary Fitzherbert; and Samuel Royal, for ſtealing ſeven guineas in the houſe of Thomas Sennocks.

Yeſterday a common hall was held for the purpoſe of taking into conſideration the propriety of petitioning the houſe of commons to promote the object of a ſpeedy peace.

The hall was uncommonly crowded, and the motion for an application to parliament for peace was introduced in a ſpeech of conſiderable length by Mr. Hodgſon, chymiſt, in Cow-croſs, and ſeconded by Mr. Wightman, linen-draper, in Bridge-ſtreet, Black-friars.

The motion was oppoſed by alderman Le Meſurier, alderman Newnham, &c. and was ſupported by alderman Combe, alderman Pickett, and others.

The meeting was extremely clamorous whenever any gentleman roſe to ſpeak againſt the motion; but the conduct of the lord-mayor cannot be ſufficiently praiſed: addreſſing the aſſembly, he ſaid he would not put the queſtion, unleſs it was fairly diſcuſſed, and begged that each party might be heard; by this means order was reſtored for a ſhort time, but the queſtion being very generally called for, it was carried for a ſpeedy peace by a vaſt majority.

Alderman Anderſon undertook to carry the petition to parliament.

The Militia buſineſs was poſtponed.

A counter-petition, by way of proteſt, was this day agreed to, and ordered to lie at the London Tavern for ſignatures.

JANUARY 27.

The following is a copy of a circular letter, written by Mr. Dundas to the mayor of Hull.

Sir, Horſe-Guards, Jan. 17, 1795.

His majeſty's miniſters being deſirous of ſubmitting to parliament the moſt ſpeedy and effectual means of procuring an additional ſupply of men for his majeſty's naval ſervice; and being deſirous, for that purpoſe, to receive the beſt information on that ſubject from the principal ports in the kingdom, I have thought it right to appriſe you of it, in order that you may communicate this intention to the merchants and traders of Hull, and in hopes that they will ſend up ſome perſons enabled to ſtate whatever may occur to them, with a view to the general ſervice, as well as to the particular intereſt of that port. I am, ſir, &c.

(Signed) HENRY DUNDAS.

The Mayor of Hull.

BIRTH.

LADY of Richard Joſeph Sullivan, eſq. M. P. a ſon.

MARRIAGES.

JOhn lord Sheffield, to the hon. miſs Lucy Pelham, daughter of lord Pelham.

Lord Gormanſtown, to the hon. miſs Southwell, one of the daughters of lord Southwell.

Hon. Henry Forbes, to miſs E. Preſton, daughter of John Preſton, eſq. M. P. for Navan.

DEATHS.

HEnry duke of Bolton: the ducal title extinct; that of marquis of Wincheſter goes to Mr. Powlett.

Lady Eliza Saville, daughter of the earl of Mexborough.

Charles earl of Aboyne.

John earl of Caſſilis.

Lady Harriet Pleydel Bouverie, daughter of the earl of Radnor.

Rev. George Berkeley, D. D. prebend of Canterbury, &c. ſon of the celebrated biſhop of Cloyne.

Earl of Sefton.

Earl of Coleraine.

Lady of lord Romney.

Hon. Thomas Broderick, under ſecretary of ſtate.

Francis Hawes, eſq.

PROMOTIONS.

JOhn earl of Bute—Lord-lieutenant of Glamorganſhire.

George earl of Warwick—Lord-lieutenant of the county of Warwick.

George James earl Cholmondeley—Chamberlain to the prince of Wales, and intendant of the houſes.

John earl of Darnley—Groom of the ſtole to his royal highneſs.

Charles Naſſau Thomas, eſq.—Vice-chamberlain.

John Byde, eſq.—Maſter of his royal highneſs' houſehold.

Earl of Jerſey—Maſter of the horſe.

Robert Shore Milnes, eſq.—Governor of Martinico.

BANKRUPTS. From the GAZETTE.

DECEMBER 30.

James Tarton, of Egham, in Surry, innholder.

Thomas Bennett, of Shaftesbury, in Dorsetshire, tanner.

Richard Thorn, and Abraham Israel Nunes, of Goswell-street-road, tanners.

William Savory, of Newbury, Berks, apothecary.

William Lawrence, of Builth, in Brecknshire, maltster.

Thomas Phillips, of Stourport Worcestershire, coal-merchant.

John Parsons, of Chichester, in Sussex, innholder.

William Middleton, of Norminton, in Yorkshire, miller.

JANUARY 3.

John King, of Great Prescot-street, Goodman's-fields, cotton-manufacturer.

Robert Roberts, of Little Russel-street, Covent-garden, linen-draper.

Jacob Isaac, of Mansell-street, Goodman's-fields, merchant.

Philip Nashey, of Addle-street, Aldermanbury, merchant.

William Savory, of Newbury, Berks, apothecary.

John Messer, of Radford, in Oxfordshire, dealer.

William Bruerton, of Durlaston, in Staffordshire, buckle-chape-forger.

James Russell, of Cambridge, liquor-merchant.

John Osborn the younger, of Gainsborough, in Lincolnshire, druggist.

John Lawrence, of Builth, in Brecknshire, shopkeeper.

Richard Stayner Jones, of East Wickham, in Kent, brickmaker.

Moses Bewdley, of Manchester, victualler.

JANUARY 6.

John Lear, of the Strand, victualler.

Benjamin Long, of Sheffield, Hants, liquor-merchant.

James Dicker Budd, of Birmingham, haberdasher.

James Olive, of Bath, shoemaker.

Daniel Waterfield, of Little James-street, Holborn, stable-keeper.

JANUARY 10.

Thomas Stanford, otherwise Brown, of Castle Donington, in Leicestershire, baker.

George Irving, of Newcastle-upon-Tyne, chemist.

John Stennett, of Long-alley, Moorfields, butcher.

JANUARY 13.

William Jones, of Brighthelmston, in Sussex, music-seller.

Joseph Tombs, of Abingdon, in Berks, banker.

Thomas Robinson, of Littlehampton, in Sussex, wine-merchant.

James Andrews, of Alton, in Hants, tallow-chandler.

Mary Wilkes, of Blockley, in Worcestershire, milliner.

Robert Ware, of York, flax-dresser.

JANUARY 17.

John Malins, of Vauxhall, in Surry, plumber.

Thomas Paty, Joseph Byrchall, and Joseph Tombs, of Union-street, Bishopsgate-street, cotton-manufacturers.

Robert Thornton, of Airton, in Yorkshire, cotton-manufacturer.

John Carpenter, of Oxford-street, dealer in porter.

Peter Nicol, of Long-acre, whitesmith.

James Tomlinson, of Stamford, in Lincolnshire, innkeeper.

Isaac Ferror, of Bedford, in Lancashire, fustian-manufacturer.

Dennis Conner, of Wine-office-court, brandy-merchant.

John Seaman, of Mendlesham, Suffolk, apothecary.

Thomas Davis, of Priors Leigh, in Salop, shopkeeper.

Charles Baker, of West-street, in Gloucester, grocer.

William Symonds, of Davies-street, Berkley-square, butcher.

JANUARY 20.

Jeremiah Miller, of Catherine-court, Tower-hill, merchant.

Thomas Jones, of Upper Shadwell, master mariner.

Richard Yeoward, of Ironmonger-lane, linen-draper.

Francis Mills Thomas, of Oxford-street, glass-manufacturer.

Tristram Bamfylde Freeman, of the Strand, printseller.

Michael Emanuel, of College-street, in Hants, watchmaker.

JANUARY 24.

James Pollard, of Northowram, Yorkshire, woolstapler.

Christopher Crowther, of Spen, Yorkshire, merchant.

Noah Cartwright, of Okehampton, in Devonshire, innholder.

John Goundrey, of Orange-street, Bloomsbury-square, tea-dealer.

Thomas Moolden, of Colchester, in Essex, shopkeeper.

John Tate, of Highgate, carpenter.

William Ellis, of Sudbury, in Suffolk, wool-factor.

Thomas Bucknall, of Daventry, in Northampton, draper.

John Lavender, of Stourbridge, in Worcestershire, shoemaker.

James Betts, of Putney, in Surry, inn-keeper.

Wallwyn Shepheard, of Boswell-court, Carey-street, money-scrivener.

George Nash, of Cleveland-street, Pancras, livery-stable-keeper.

NEW PUBLICATIONS.

MICHLE's Poems, and a Tragedy, 4to. 1l. 1s.

Hume's History of England, abridged, 2 vol. 8vo. 16s.

History of England, from the Revolution, 8vo. 8s.

Offspring of Russell, a Novel, 2 vol. 12mo. 7s.

Duke of Clarence, a Novel, 4 vol. 12mo. 14s.

Smith's Rural Walks, 3 vol. 12mo. 5s. half bound.

Remarks on the Education of Attornies, 2s. 6d.

Henry, a Novel, 4 vol. 12mo. 14s.

Chisholm on the Pestilential Fever in the West Indies, 1793, 8vo. 6s.

Letters and Papers on Agriculture, &c. vol. 7, 6s. boards.

Major's Letters on the Heraldic History of Norman Tiles, small 8vo. 4s. boards.

Lectures on Astronomy and Natural Philosophy, for the Use of Children, 1s. 6d.

Walker's Review of Political Events in Manchester, 2s. 6d.

Fulham's (Mrs.) Essay on Combustion, 8vo. 3s. 6d. sewed.

Macdonald's Thoughts on the Public Duties of Private Life, 2s.

Parr's Story of the Moor of Venice, 2s. 6d.

Street's History of the Reign of Louis XVI, 8vo. 7s.

Townsend's Guide to Health, 8vo, 7s.

White's Summary of the Pneumato-Chymical Theory, 1s.

Mouse-trap; a Novel, 2 vol. 7s.

Cypriots, or Miniature of the 15th Century, 2 vol. 12mo. 8s.

Coxe's View of the United States of America, 8vo. 8s.

Mayo's Chronological History of the European States, folio, 1l. 5s. boards.

AVERAGE PRICES of CORN,

January 24, 1795.

By the Standard Winchester Quarter Eight Bushels.

INLAND COUNTIES.

	Wheat.		Rye.		Barley.		Oa	
	s.	d.	s.	d.	s.	d.	s.	
Middlesex	60	11	37	0	33	0	25	
Surry	59	4	37	3	33	8	26	
Hertford	55	5	—		34	2	24	
Bedford	56	4	38	4	32	0	22	
Huntingdon	55	11	—		32	4	21	
Northampton	55	0	41	0	31	3	22	
Rutland	55	0	—		34	0	22	
Leicester	59	8	—		30	1	24	
Nottingham	60	0	41	6	37	2	22	
Derby	61	0	—		40	0	25	
Stafford	60	7	—		39	8	24	
Salop	59	10	44	7	38	8	23	
Hereford	58	2	44	8	38	9	23	
Worcester	1.	0	—		38	8	26	
Warwick	65	1	—		41	1	29	
Wilts	56	9	—		36	2	26	
Berks	59	11	—		32	5	25	
Oxford	56	10	—		34	0	20	
Bucks	57	10	—		32	6	23	
Brecon	63	2	51	2	36	9	19	
Montgomery	56	3	—		32	0	23	
Radnor	60	7	—		33	0	21	

MARITIME COUNTIES.

Essex	61	0	24	6	34	9	25	
Kent	55	4	26	6	32	5	23	
Sussex	53	0	—		34	6	25	
Suffolk	57	5	34	0	32	5	24	
Cambridge	51	10	33	2	28	7	19	
Norfolk	51	9	32	0	29	5	20	
Lincoln	52	7	38	3	32	3	19	
York	51	5	42	4	32	4	19	
Durham	51	10	—		—		20	
Northumberland	48	8	35	4	26	5	19	
Cumberland	54	6	42	4	28	7	18	
Westmorland	54	11	42	10	31	10	19	
Lancaster	55	3	—		37	10	21	
Chester	52	5	—		37	8	23	
Flint	54	9	—		41	3	20	
Denbigh	39	5	—		42	5	18	
Anglesea	50	0	—		34	0	24	
Carnarvon	53	4	42	0	35	0	17	
Merioneth	62	2	42	0	34	6	18	
Cardigan	52	1	38	0	27	10	13	
Pembroke	46	2	—		50	11	15	
Carmarthen	55	2	—		30	6	16	
Glamorgan	60	6	—		32	8	18	
Gloucester	58	10	—		36	2	25	
Somerset	60	8	—		35	8	20	
Monmouth	61	7	—		39	3	20	
Devon	63	4	—		33	3	19	
Cornwall	55	10	—		29	8	17	
Dorset	56	1	—		34	1	26	
Hants	50	10	—		34	5	25	

Peck Loaf, 2s. 11d.

PRICES of STOCKS, from December 27, 1794, to January 27, 1795, both inclusive.

By Anthony Clarke, Stock-Broker, No. 13, Sweeting's-Alley, Cornhill.

Days	Bank Stock.	3 per C. reduced.	3 per C. consols. shut.	4 per C. consols.	5 per C. consols. shut.	Long Ans.	Short Ans.	India Stock. shut.	India Bonds.	South Sea Stock. shut.	Old Ann.	New Ann. shut.	Navy Bills.	English Lot.	Tic.
27															
29	155 5/8	64 7/8	64 5/8 a 65 1/4	80 3/4	—	18 3/4	8 7/8	189 1/4	9s. pr.	—	65	—	2 1/4 dis.	20 10	6
30	155 1/2	65 1/4	64 1/2 a 65	80 7/8	—	18 3/4	8 7/8	189 1/4	—	—	—	—	2 1/4	20 7	6
31	156	65 1/2	65 a 1/4	80 7/8	—	18 7/8	8 7/8	189 1/4	8	69 1/2	65 1/4	—	2 1/4	—	
1															
2	155 3/4	65 1/8	65 a 64 3/4	80 3/4	99 7/8	18 3/4	8 7/8	188 3/4	7	—	65	—	2 1/8	20 6	0
3	—	65	64 3/8 a 3/4	80 7/8	—	18 3/4	8 7/8	188 1/2	6	—	—	—	2 1/8	—	
5	155	64 5/8	64 3/8 a 3/4	80 1/2	100	18 3/4	8 7/8	188 1/2	7	—	—	—	2 1/8	20 9	0
6															
7	154	64 1/8	64 1/2 a 3/8	80 1/4	99 5/8	18 3/4	8 3/4	188 1/4	7	—	—	—	2 1/8	—	
8	154 3/4	64 1/8	64 1/2 a 3/8	80 3/4	—	18 3/4	—	188 3/4	6	—	—	—	2 1/4	20 6	0
9	155	64 1/8	64 1/2 a 3/4	80 1/4	99 5/8	18 7/8	8 7/8	189	6	—	—	—	2 1/4	20 6	6
10	154 7/8	64 1/8	64	80 1/4	—	18 7/8	8 7/8	—	6	—	—	—	2 1/8	—	
12	154 7/8	64 1/8	64 1/2 a 1/2	80 1/4	99 5/8	18 7/8	8 7/8	189	8	—	—	—	2 1/8	20 8	0
13	154 1/2	64 1/8	64 1/2 a 1/4	80 1/4	—	18 7/8	—	189 3/4	9	—	—	—	2 1/8	20 6	0
14	154 1/8	64 1/8	64 1/2 a 3/4	80 1/8	—	18 3/4	8 7/8	189	11	—	—	—	2 1/8	20 4	6
15	154 1/2	64 1/8	64 1/2 a 3/4	80	—	18 3/4	8 7/8	189	9	—	—	—	2 1/2	20 5	0
16	154	64 3/4	—	80	—	18 3/4	8 7/8	188 1/2	7	—	—	—	—	20 3	0
17	155	—	63 3/4 a 3/8	79 3/4	99 1/4	18 7/8	8 7/8	187 1/2	5	—	—	—	2 1/8	19 17	0
19															
20	—	63 1/8	63 3/4 a 3/8	79 3/4	99 1/4	18 3/4	8 7/8	187 1/2	4	—	—	—	2 1/4	20 7	0
21	—	63 1/4	62 a 61 5/8	79 1/8	96 1/4	18 3/4	8 3/4	180 3/4	4	—	—	—	2 7/8	20 7	0
22	151 1/2	63 1/4	61 5/8 a 3/8	78 7/8	95 7/8	18 7/8	8 3/4	181	4	65	—	61 1/8	3	20 2	6
23	151	63 1/4	61 5/8 a 61	78 7/8	95 7/8	18 7/8	8 3/4	180 3/4	4	—	—	—	3	—	
24	—	—	61 1/2 a 7/8	79	95 7/8	18 3/4	8 3/4	181 1/4	5	66 1/4	—	—	3	20 3	0
26	151 1/2	63 1/4	61 1/2 a 62 1/8	79 1/4	95 7/8	18 3/4	8 3/4	181 1/4	6	—	63 1/4	—	2 7/8	20 4	0
27	153 1/4	64 1/4	62 1/8 a 63 1/4	80 1/4	96 1/8	18 3/4	8 7/8	183 1/4	6	—	—	63 1/4	2 1/4	20 2	6

☞ In the 3 per Cent. consols. the highest and lowest Price of each Day is given; in every other Article the highest Price only, the Long and Short Annuities excepted, which are given within a sixteenth of the highest Price. In the different Funds that are shut, the Prices are given with the Dividend till the Days of Opening.

Kirkham Abbey, Yorkshire.

A Description of KIRKHAM ABBEY, *in* Yorkshire: *With a Perspective View of the North Part of the Gate of that once magnificent Structure.*

KI[illegible]AM ABBEY, founded for [illegible] of the order of St. Augustine, [illegible] built by Walter Espec, a great [illegible] *, and his lady Adelina, in the [illegible] of king Henry the first, on acc[illegible] of the death of Walter, their on[illegible] and heir, who was killed by a fa[illegible] his horse. This abbey, it is su[illegible], was surrendered to the crown, [illegible] John Kildwick, the last prior, [illegible] year 1539, for which he was [illegible] fifty pounds a year for his life.

This [illegible] is situated in the parish of Kir[illegible], close by the river Derwent, [illegible] mile south of Whitwell, six miles d[illegible] from Malton, and twelve from Y[illegible]. It stands in the centre of a de[illegible] valley, which once afforded [illegible] most interesting and picturesq[illegible] scenery, but its ancient beauty [illegible] now almost destroyed, and the ve[illegible] pile itself, has not escape[illegible] ravages of time.

The [illegible] part of the gate (of which [illegible] annexed plate is a view, taken [illegible] spot, in the year 1792) is the p[illegible]al remains of that once magni[illegible] structure. According to Mr. G[illegible] account, it has been most curious[illegible] [illegible]mented with carved work, [illegible]lly near the windows, as St[illegible]er with the keys in his left; [illegible] and the church in his right; [illegible] sitting in judgment; Christ [illegible] David killing Goliah; S[illegible] killing the dragon; and se[illegible] of arms, many of which [illegible] perfect, but others greatly [illegible] The same historian says, t[illegible]ous to the gate, in the ye[illegible] part of the great house, [illegible] the habitation of pilgrims, who were entertained during ten days, when their necessities were examined into and supplied. On the east side was the Porter's Lodge; near to which, some part of the building, under curious arched work, had been converted into an alehouse, but is now demolished. Near the Abbey, stood a large church, with two steeples, at the west end. Within the gate, was a small chapel of ease, near the great church, lately repaired, for the use of the parishioners, by madam Frances Crowther, then lady of the manor, who also repaired the cross near the Abbey Gate.

On the front of a house against this gate, was the effigy of a prince, with a horn, which was supposed to be Ulphus, and another not easily to be distinguished.

Southward of this priory, may be perceived the cellars; now rude and broken. Over these cellars was a spacious hall, or dining-room. From a door, north-west, was the entrance into the bowling green; near which, on the west-side, in the wall, are stalls, or seats, divided by pillars; and over one of them may yet be perceived, in painting, an abbot, or prior conferring his benediction.

The south-west parts of this priory appear to be the ruins of the dormitory. A small part of the east wall of the chancel yet remains; and, until the year 1784, stood a stupendous Gothic tower, curiously and beautifully interwoven with ivy, which was then blown down by a high wind.

It is said, that underneath the ruins, there is a curious marble pave-

* T[illegible] is immortalized by Alridus, abbot of Rivaulx Abbey, (which Abbey [illegible] also built, became a monk in it, and is there interred) as 'a prudent counsellor, valiant and discreet in war, a faithful friend, and a true subject.' He was of a gigantic stature, but well-proportioned, and, in other respects, agreeable.

GENT.

ment, under which, it is ſuppoſed, lie the remains of many famous perſons.

It has been often ſaid, and with ſome degree of probability, that there is a ſpacious ſubterranean paſſage from the Abbey toward Malton, which extends more than a mile.

About a quarter of a mile, north-eaſt from the Abbey, are two fine wells: one of them was encompaſſed in a circular manner, with a ſtone wall, from which, by leaden pipes, under ground, the water was conveyed to the Abbey.

Many of the ſtones of this Abbey, were applied to the building of Howſham Hall, the ſeat of the late Nathaniel Cholmley, eſq.

What compaſs of ground the priory of Kirkham has once covered, it is difficult to aſcertain. The foundations that are viſible are greatly extended: and, though moſtly overgrown with plants and herbage, the farmers have frequently dug up the foundation ſtones, which they burnt into lime. The annual revenue of this Abbey, with the land belonging to it, was upward of three hundred pounds.

The Shell now ſtanding, together with the other ſcattered remains of this venerable priory, are very ſufficient to give a high opinion of its ancient magnificence, and cannot but ſuggeſt at the ſame time, to the contemplative traveller, a variety of awful reflections on the vanity and viciſſitudes of all earthly things, contraſted to the glorious proſpects of futurity, to which alone we can look for real and permanent felicity.

J. H.

The HISTORY *of* KNOWLEDGE, LEARNING, *and* TASTE, *in* Great Britain, *during the Reign of King* JAMES *the Firſt. Part the Firſt: Continued from Page* 14.

ON the acceſſion of king Edward the ſixth, great encouragement was given to the reading of the ſcriptures. A royal injunction was publiſhed, that the whole Engliſh Bible ſhould be placed in churches; and it was farther enjoined, that the paraphraſe of Eraſmus in Engliſh, to the end of the four Evangeliſts, ſhould occupy the ſame ſituation. We cannot but remark, to the honour of Eraſmus, that this great man, whoſe ſervices to general literature were ſo eminent and extraordinary, was thus a peculiar benefactor to our own country, in a matter of the utmoſt importance. During the courſe of Edward's reign, which was leſs than eight years, eleven impreſſions of the whole Bible were publiſhed, and ſix of the New Teſtament. It is worthy of obſervation, that the Bibles were reprinted agreeably to the preceding editions; whether Tindall's, Coverdale's, Matthewe's, Cranmer's, or Taverner's. Hence it is evident that they appeared with a different text, and with different notes; the reformers ſeeming more deſirous of gratifying the taſtes of all readers, than fearful of perplexing them by ſlight variations. It is doubtful whether during this reign any freſh attempts were made at tranſlation.

No public encouragement to works of this kind could be given under the popiſh government of queen Mary: but the Proteſtant exiles at Geneva formed the deſign of a new verſion of the Bible, which was completed in 1560, and printed in that city. Notwithſtanding queen Mary's deceaſe, and the acceſſion of Eliſabeth to the throne of England, ſome of the Engliſh refugees continued at Geneva for the ſole purpoſe of finiſhing the undertaking. The three moſt learned of the tranſlators were biſhop Coverdale, Anthony Gilby, and William Whittingham; and they were all of them zealous Calviniſts, both with regard to doctrine and diſcipline. This tranſlation was ſo popular, and was ſo

much uſed in private families on account of the notes, that, from the year 1500 to 1616, there were more than thirty editions of it, in folio, quarto, or octavo; not to mention the impreſſions of it that took place at Geneva, Edinburgh, and Amſterdam. It was a work of great labour; but ſome of the marginal notes gave offence to very high churchmen and the zealots for prerogative. For this reaſon king James the firſt ſpoke of it, at the conference at Hampton-court, in terms of peculiar diſlike. Whatever may be thought of it in this reſpect, doctor Geddes does not heſitate to declare, with relation to the verſion itſelf, that he thinks it in general better than that of James' tranſlators.

In 1568, appeared the Bible which, upon account of eight biſhops, beſide other perſons, being employed in it, has been called the Biſhops' Bible. This edition was undertaken by royal commandment, and was executed under the auſpices of archbiſhop Parker, who exerted all his weight and talents upon the ſubject. In the accompliſhment of the deſign, diſtinct portions of the Bible (being at leaſt fifteen in number) were allotted to ſelect men of learning and abilities; and other critics were employed in comparing the work with the original languages, and with the former tranſlations. One of theſe critics, the names of moſt of whom are now little adverted to, was Giles Laurence, a man of great celebrity at that time for his knowledge of the Greek tongue, and whoſe caſtigations were exactly followed. The archbiſhop ſent inſtructions concerning the method which the tranſlators were to obſerve; and he recommended the addition of ſome ſhort marginal notes, for the illuſtration and correction of the text. He did not, however, truſt to others; but took upon himſelf the principal direction of the affair, reviewed the performance, and perhaps gave it the finiſhing hand. It was not ſo much his province to tranſlate, as to overſee, direct, examine, prepare, and complete the whole. So highly pleaſed was our good prelate when this great work was brought to a concluſion, that, in the ſpirit and the words of old Simeon, he expreſſed the tranquillity with which he ſhould now meet his diſſolution. Moſt of the editions of the Biſhops' Bible are in folio and quarto; the reaſon of which is, that it was chiefly deſigned for the uſe of churches.

The zeal of the Engliſh Proteſtants for tranſlations of the ſacred writings at length ſtirred up the Roman catholics to the ſame buſineſs. It was impoſſible any longer to reſiſt the torrent; and therefore, inſtead of oppoſing it, they reſolved to have a verſion of their own making: nor were they aſhamed to confeſs that they were driven into this meaſure contrary to their will. In 1582, an Engliſh New Teſtament, in quarto, was printed at Rheims, tranſlated from the Vulgate Latin, and retaining many Oriental, Greek, and Latin words, with an apparent intention of rendering the text leſs capable of being underſtood by common readers. The Old Teſtament was afterward publiſhed at Douay, in two quarto volumes, the firſt of which appeared in 1609, and the ſecond in 1610. William Alan, Gregory Martin, and Richard Bridlow are underſtood to have been the tranſlators; and it is ſaid that the annotator was Thomas Worthington. The verſion of the New Teſtament has by ſome writers been chiefly aſcribed to William Raynolds.

We come now to the authoritative tranſlation of the holy ſcriptures, which was accompliſhed in the reign of James the firſt, and which was the only good effect of the Hampton-court conference, and the only point wherein the contending parties agreed. On the ſecond day of that conference, doctor Raynolds, the principal ſpeaker for the puritans, moved the king that a new verſion of the Bible might be undertaken; and the reaſons aſſigned by him for his motion were, that the tranſlations which had been allowed in the reigns of Henry the eighth and

Edward the ſixth were corrupt, and that other exiſting tranſlations were not conformable to the truth of the original. The king anſwered, that he had never yet ſeen a Bible well tranſlated into Engliſh, and expreſſed his wiſh that the moſt learned men in both the univerſities would engage in the work; which, when reviewed by the biſhops, might be preſented to the council, and then receive the ſanction of his authority: that ſo the whole national church might be bound to that verſion, and not be permitted to uſe any other. On the ſuggeſtion of biſhop Bancroft, marginal notes were forbidden. In 1604, fifty four learned men of Oxford, Cambridge, and of other places, were commiſſioned to confer together, ſo that nothing ſhould paſs without a general conſent, and every meaſure be adopted that might contribute to the perfection of the undertaking.

The number of actual tranſlators was reduced by death to forty-ſeven, who were divided into ſix claſſes, according to the following arrangement: 'Ten were to meet in Weſtminſter, and to tranſlate from the Pentateuch to the end of the ſecond book of Kings. Eight, aſſembled at Cambridge, were to finiſh the reſt of the Hiſtorical Books, and the Hagiographa. At Oxford, ſeven were to undertake the four Greater Prophets, with the Lamentations of Jeremiah, and the twelve Minor Prophets. The Epiſtles of St. Paul, and the remaining canonical epiſtles, were allotted to another company of ſeven at Weſtminſter. Another company of eight, at Oxford, were to tranſlate the Four Goſpels, the Acts of the Apoſtles, and the Apocalypſe. Laſtly, another company of ſeven, at Cambridge, had aſſigned to them the Apocrypha, including the Prayer of Manaſſeh.' In this appointment it was intended that the divines employed ſhould not be too many, leſt one ſhould trouble another; and at the ſame time, that they ſhould be ſo numerous as to prevent any important object from eſcaping their attention. The prelates were likewiſe enjoined to inform themſelves of ſuch learned men in their ſeveral dioceſes as had knowledge of the Hebrew and Greek tongues, and had ſtudied the ſcriptures; and the king's pleaſure was ſignified, that their obſervations ſhould be ſent to one of three perſons fixed upon for the purpoſe of receiving any occaſional communications.

For the encouragement of the tranſlators, proviſion was made that they ſhould be promoted to eccleſiaſtical benefices, as opportunity offered; and, in the courſe of a few years, ſeven of them roſe to the epiſcopal dignity. To invigorate their ardour, and to accelerate their ſpeed, the biſhop of London informed them, that his majeſty was not ſatisfied till the work was entered upon; and that his royal mind rejoiced more in the good hope which he had for its happy ſucceſs, than for the peace concluded with Spain. Notwithſtanding theſe inducements, the tranſlation was not actually begun till early in the year 1607; and indeed it muſt have required a conſiderable degree of previous preparation. Certain rules were preſcribed to be carefully obſerved in the undertaking, the generality of which were judicious and proper, though to a few of them, perhaps, objections might be made. It was likewiſe the king's pleaſure, which had been ſignified to the vice-chancellor of Cambridge ſo early as the 13th of Auguſt 1604, that beſide the perſons employed for the Hebrew and Greek, there ſhould be ſelected three or four of the moſt eminent and grave divines of the univerſity, to be overſeers of the tranſlations, and to ſee to it that the rules laid down were ſtrictly regarded.

Nearly three years were employed in making this verſion, the progreſs of which was not a little retarded by the death of a Mr. Lively, a Cambridge ſcholar, upon whom the weight of the work greatly reſted, on account of his ſkill in the Oriental languages.

It is to be regretted, that the memory of a man of ſuch eminent literature, and whoſe aſſiſtance was of ſo much conſequence in this great undertaking, ſhould have ſunk into almoſt total oblivion.

When the tranſlation was finiſhed, two perſons were choſen, to refine and poliſh it, from each of the joint companies which had aſſembled at Oxford, Cambridge, and Weſtminſter. The two from the Cambridge companies were Mr. John Boys, fellow of St. John's college, and Mr. Andrew Downes, Greek profeſſor; who daily met their fellow labourers in Stationers' hall, London, and in nine months completed their taſk. Laſt of all Bilſon, biſhop of Wincheſter, and Dr. Miles Smith, who from the beginning had been very active in the affair, again reviewed the whole, and prefixed arguments to the ſeveral books. Dr. Smith, who, for his indefatigable pains in the work, was ſpeedily advanced to the biſhopric of Glouceſter, was ordered to write the preface. Mention is made of a chief overſeer and taſkmaſter, under his majeſty, to whom not only the tranſlators, but alſo the whole church, was much bound. The perſon intended was probably archbiſhop Bancroft.

The Engliſh divines, who in 1618 were commiſſioned to attend the ſynod of Dort, delivered a paper to that aſſembly, containing an account of this matter; which in ſome few circumſtances differs from that already given. It is ſaid in particular, that after each individual had finiſhed his taſk, twelve men aſſembled in one place, and reviſed the whole; and only ſeven rules are mentioned as preſcribed to the interpreters; whereas there is the moſt authentic evidence that the rules were fourteen in number.

In the year 1611, every thing was completed, and that verſion of the holy ſcriptures was publiſhed by authority which has ſince continued to be the national ſtandard *. It was a great work, highly to the honour of the kingdom, and the nobleſt exhibition of the theological knowledge of our country which the reign we are treating of afforded. When, however, we caſt our eyes on the liſt of the perſons concerned in it, we find, comparatively, but a few names that have been handed down with any extraordinary reputation to poſterity. The moſt diſtinguiſhed are thoſe of Dr. Andrews, Dr. Overall, Mr. Chaderton, Dr. Raynolds, Dr. Smith, Mr. Downes, Mr. Boys, Dr. Barlow, and Mr. Faireclowe. By Mr. Faireclowe was certainly meant Daniel Featley, of great celebrity in his day for his talents at diſputation, eſpecially againſt the papiſts. Though the reſt are now ſcarcely known, they were undoubtedly deemed the beſt ſcholars of their time; and ſome of them might be as truly learned as thoſe whoſe fame has had the good fortune not to be obliterated.

Various characters have been given of this authoritative tranſlation of the bible; ſome highly in its praiſe, and ſome pointing out its errors and defects. On the whole, its merit muſt be allowed to be very great. When it was made, our language was in the perfection of its manly and genuine ſimplicity, and was in ſuch a ſtate as admirably to coaleſce with the idioms and conſtruction of the original. Our national bible conſtitutes, as it were, the ſtandard of the Engliſh tongue, and has eminently contributed to the preſervation of its purity. But, notwithſtanding its general excellence, there are certainly many things in it which are highly objectionable. A variety of paſſages are, without queſtion, wrongly tranſlated; and there are numbers of places in which the language might be rendered more correct and elegant, without departing from its native ſimplicity. Hence

* Though we have not neglected other writers, it ought here to be mentioned, that we have been particularly indebted in our narrative to biſhop Newcombe's 'Hiſtorical View of the Engliſh Biblical Tranſlations.'

there have been various demands for another verſion; and theſe demands have, of late years, become more frequent and importunate. A new verſion of the ſcriptures has been called for by the moſt reſpectable names; by ſuch names as a Kennicott, a Lowth, a Blayney, a Campbell, a Hodgſon, a Wintle, a Geddes, a Wakefield, a Symonds, and a Newcome; all of whom (not to mention others) have, by their learned labours, afforded admirable ſpecimens of what improvements might be made in a public reviſion of the bible. There cannot be a fitter time for ſuch an undertaking. The ſound literature, the critical ſpirit, the enlarged underſtanding of the preſent age, together with the late extenſive collation of manuſcripts, would give every advantage to the accompliſhment of the deſign.

A queſtion will ariſe, whether there ſhould be an entirely new tranſlation of the ſacred writings, or only a reviſion of the old one. We heſitate not to declare, that we are of the latter opinion. Let every miſtaken place be corrected, and every defect of language removed; but let there be no alterations merely for the ſake of alteration. When what is ſaid is well expreſſed, both as to ſenſe and words, why ſhould it be altered? The amendments, likewiſe, where neceſſary, ſhould coaleſce, as much as poſſible, with the chaſte and ſimple language of the preſent authoriſed verſion.

Another literary undertaking was formed in king James the firſt's reign, of far inferior conſequence, but which, however, muſt not be paſſed over without notice. This was the inſtitution of the college at Chelſea. It conſiſted of a provoſt and nineteen fellows, among whom no biſhops were admitted; and the particular deſign of it was, that learned divines ſhould be employed, as occaſion might require, to write in ſupport of the religion profeſſed in the kingdom, and in confutation of thoſe by whom that religion ſhould be attacked. Great pains were taken by Matthew Sutcliffe, the firſt provoſt, to carry the ſcheme into execution; and the king wrote letters to the archbiſhop, and through him to the biſhops, exhorting them to forward the work. For the building of the college, collections were made in all the pariſhes of England, notwithſtanding which monies came in ſlowly, and very ſmall ſums were communicated. Objections, too, were urged againſt the inſtitution in general, as not founded on any apparent cauſes of neceſſity or uſefulneſs. After ſubſiſting ſome years in a feeble and inefficacious ſtate, it was at length diſſolved; nor can the diſſolution of it be conſidered as having been a real loſs to the public. The ſcheme was originally framed on too narrow a plan, being wholly devoted to religious controverſies, and eſpecially the controverſies with the papiſts; for the diſcuſſion of which there was no occaſion for an extraordinary eſtabliſhment. Not to mention the two univerſities of Oxford and Cambridge, divines were ſcattered through the whole kingdom, who were amply ſufficient for objects of this kind.

The part which king James took with regard to Conrad Vorſtius, a foreign theologian, is not to be forgotten. This divine had written works in which he had advanced opinions contrary to the reputedly orthodox tenets of the times. Nevertheleſs, ſuch was his reputation for ability and literature, that he was choſen, in 1611, by the curators of the univerſity of Leyden, to be their public divinity-profeſſor, in the room of Arminius lately deceaſed. It is not eaſy to expreſs the indignation with which the Engliſh monarch was fired on this occaſion. All his theological zeal was awakened, and the matter, in his eſtimation, was of more importance than the moſt ſerious political concern. Having peruſed the books of Vorſtius, he was ſtruck with horror, and preſently diſpatched a letter to ſir Ralph Winwood, his am-

baſſador reſident with the ſtates, willing and requiring him to let them underſtand 'how infinitely he ſhould be diſpleaſed, if ſuch a monſter as Vorſtius ſhould receive any advancement in their church.' A large letter to the ſame purpoſe was written by the king to the ſtates-general themſelves. The people of Holland were far from being pleaſed with this interference of a foreign prince, in their internal affairs. It was alleged, in particular, by the curators of the univerſity of Leyden, that it was a diſparagement to their judgments, if, being near at hand, they could not as well examine the ſoundneſs of Vorſtius' doctrine as any diſtant potentate whatever. To this it was added, that it would caſt an imputation of levity and inconſtancy on the ſtates, ſolemnly to invite a ſtranger among them, and then ſo ſoon to recede from their reſolution; beſide which, an indignity would redound to the count of Tecklenbourg Benthem, who had long been the patron of Vorſtius, and in whoſe territories he had been ſettled, previouſly to his having been called to Leyden. In conſequence of the perſecution raiſed againſt him, Vorſtius printed a book in his own defence, which he entitled 'A Chriſtian and modeſt Anſwer,' and in which he pleaded, that 'what he had written before, was but probably propounded, not dogmatically delivered.' Nothing, however, could appeaſe king James, who purſued the matter with ſo much vehemence, that the ſtates were obliged, after ſeveral remonſtrances, to deprive the profeſſor of his chair, and to baniſh him their dominions. Before the termination of the buſineſs, James carried his oppoſition ſo far as to circulate in French a declaration againſt Vorſtius; and to crown the whole, the works of this eminent and learned divine were publicly burnt, by his majeſty's command at St. Paul's croſs in London, and in both the univerſities.

That higheſt degree of perſonal ſeverity, which, if it had been in the king's power, would doubtleſs have been exerted againſt Vorſtius, was diſplayed, in all its atrocity, toward an Engliſh hereſie. This was Bartholomew Legate, a native of Eſſex, handſome in his perſon, and about forty years of age. The talents of his mind appear to have been conſiderable; and they were accompanied with a boldneſs of ſpirit, and a fluency of ſpeech. He was excellently ſkilled in the ſcriptures, and his conduct in life was without reproach. 'The poiſon of heretical doctrine,' ſays Fuller, 'is never more dangerous, than when ſerved up in clean cups, and waſhed diſhes.' Such was James' confidence in his royal eloquence and theological attainments, that he took upon himſelf the converſion of Legate. When, after frequent interviews, his majeſty failed of his expectations, he was, on one occaſion, ſo filled with choler, that he ſpurned at the heretic with his foot. From the king, Legate was aſſigned to the biſhops, who were equally unſucceſsful. Dr. John King, biſhop of London, was the principal agent in the affair; in which, however, he did not act without many aſſiſtants, lawyers as well as divines. At length, when no arguments or inducements could prevail upon Legate to recant his opinions, the prelate pronounced him to be an obſtinate, contumacious, and incorrigible heretic, and conſigned him to the ſecular power. Accordingly, he was burnt at Smithfield *; dying with great fortitude, and refuſing to the laſt moment the offers of mercy upon terms that were contrary to the dictates of his conſcience. Bartholomew Legate is uſually deſcribed by our hiſtorians as having been an Arian; but this was not the caſe. From the liſt of his tenets it appears, that he was ſtrictly and properly a Socinian, and that his ſentiments were exactly the ſame with thoſe of the perſons who, of late years, have been diſtinguiſhed by the appellation of Unitarians.

* March 18, 1612.

Another heretic, who was committed to the flames a few weeks after the execution of Legate, was Edward Wightman, of Burton upon Trent. He was convicted before Richard Neile, biſhop of Coventry and Litchfield, and burnt in the latter city. He is ſaid to have maintained worſe opinions than Legate. Ten ſeveral hereſies are laid to his charge; namely, thoſe of Ebion, Cerinthus, Valentinian, Arius, Macedonius, Simon Magus, Manes, Manichæus, Photinus, and of the Anabaptiſts! We believe the only remaining printed authority for this accuſation is taken from the warrant for his burning; a document which will ſcarcely be deemed to hold the firſt rank in point of hiſtorical evidence. It is probable that Wightman was only an Unitarian Baptiſt.

There was yet a third heretic, who was condemned to be burnt, but who was permitted to linger out his life in Newgate, where he died. He is ſaid to have been a Spaniſh Arian. The humanity of the people began to revolt at repeated executions for ſuppoſed errors in religious opinion; ſo that the governing powers were deterred, in the caſe of the Spaniard, from proceeding to the laſt extremity.

It is unpleaſant to relate facts ſo diſgraceful to our country. But it is neceſſary to mention them, as they ſtrongly mark the ſpirit of the times, and decidedly prove that the theological knowledge which prevailed had little contributed to the enlargement of the underſtanding, and the rectification of the mind. This reproach, however, is not peculiar to Great Britain. The ſame narrowneſs of ſentiment ſubſiſted in other parts even of proteſtant Europe. Though the reformation from popery had begun nearly a hundred years before, ſtill the great principle on which alone it could rationally be founded, and ſecurely reſt, the right of private judgment, was ſlenderly diffuſed, and frequently violated. The only apparent exception was found in the United Provinces, where the neceſſity of union, in oppoſition to the Spaniſh government, and the encouragement of commerce, required and produced a conſiderable degree of toleration. Nevertheleſs, even in theſe provinces an ample portion of bigotry exiſted, as will be evident from the acts of the ſynod of Dort.

To mention particularly this ſynod may ſeem to be a departure from our plan, which confines us to the hiſtory of knowledge in our own country. But to advert to this eccleſiaſtical aſſembly, will be no deviation from the object which we have expreſsly in view. The proceedings of the ſynod of Dort are connected with the ſtate of theology in England. Nothing could be more intereſting to a man of king James' character than the buſineſs for which the ſynod was convened, which was authoritatively to ſettle the doctrines diſputed between the Calviniſts and the Arminians. Upon this occaſion four eminent divines were ſent to repreſent the Engliſh church. Theſe were Dr. George Carleton, at that time biſhop of Landaff, and afterward biſhop of Chicheſter; Dr. Joſeph Hall, dean of Worceſter, and afterward biſhop of Exeter and Norwich; Dr. John Davenant, Margaret profeſſor, and maſter of Queen's college in Cambridge, afterward biſhop of Saliſbury; and Dr. Samuel Ward, maſter of Sidney college, Cambridge, and archdeacon of Taunton. Dr. Hall, not finding the Low Countries to agree with his health, entreated leave to return to England, which was permitted him, and Dr. Thomas Goad, chaplain to the archbiſhop of Canterbury, was ſubſtituted in his ſtead. A divine likewiſe was added to the four Engliſh colleagues, in the name of the church of Scotland. This was Walter Balcanquall, bachelor of divinity, a native of that country, but who had received his education, degrees, and preferments in England. The celebrated John Hales, of Eton, was alſo preſent at the aſſembly, in quality of chaplain to ſir Dudley

Carleton, the Engliſh ambaſſador at the Hague. Upon the impartial and open mind of Hales the debates of the ſynod produced a revolution of ſentiment. He was converted by a ſpeech of Epiſcopius, and from that moment, as he himſelf informs us, he bad good night to John Calvin. Inſtructions were given by the king to the four repreſentatives of the church of England, for the regulation of their proceedings. The firſt and the laſt of them were very judicious. By the firſt they were commanded to inure themſelves, upon all occaſions, to the practice of the Latin tongue; that, when there was cauſe, they might deliver their minds with the greater readineſs and facility. By the laſt, they were enjoined to conduct themſelves with that advice, moderation and diſcretion, which were ſuited to perſons of their quality and gravity. Two of the rules, which required them to be unanimous in their determinations upon every queſtion, and which bound them not only to a concurrence with the ſcriptures, but with the doctrine of the church of England, certainly did not leave them to the free operation of their own underſtandings. The inſtructions were, however, on the whole, drawn up in the language of moderation, compared with that narrow and rigid attachment to Calviniſm which had appeared in many former controverſies and eccleſiaſtical proceedings. In the ſynod of Dort, the final reſult of the debates was the eſtabliſhment of the Calviniſtical tenets, while the remonſtrants were left in a ſtate of diſcouragement and perſecution. Nevertheleſs, this did not hinder the diffuſion of the Arminian principles, which were gradually diſſeminated, and, in a courſe of time, were adopted by eminent clergymen, by illuſtrious laymen, and by a large body of people, in various countries of Europe.

[To be concluded in our next.]

MISCELLANEOUS THOUGHTS ON IDLENESS.

'For ſhame! ſo much to do, and yet *idle*.' BULL.

IDLENESS is one of the moſt extraordinary diſorders of the mind, uniting in its progreſs more pain and pleaſure than any other. It is likewiſe more general than any other; for, however the wiſeſt men may deprecate it, there are very few who can venture to ſay that it does not very frequently overmaſter their beſt reſolutions, and diſſolve their firmneſs. Its firſt attacks are certainly pleaſant, becauſe they afford relaxation from ſome labour of which we are tired, but the continuance of them creates a degree of pain and langnor more intolerable than any labour, and frequently incurable.

In the pride of our hearts, we direct our cenſures upon account of idleneſs, principally againſt the poor. Many of them, it is true, are very idle, but then we ought to apologize, in ſome degree, from two circumſtances; firſt, that their induſtry ſeldom brings more than the neceſſaries of life, and that they conſequently have not the temptation of its comforts to ſpur them to activity; and ſecondly, that when the poor are idle, the ſin carries the puniſhment along with it, and there is no occaſion for very ſharp cenſure to thoſe who are already ſuffering. But how ſhall the better ranks of mankind excuſe their idleneſs? How ſhall they who boaſt of the dignity of rational and improved natures, vindicate that barrenneſs in which they allow their minds to remain?

It is amuſing to liſten to the various excuſes made for idleneſs, all of which taken ſeparately are allowed by the party to be very urgent and convincing, and taken together, abſolutely amount to a degree of buſtle and buſineſs, the fartheſt removed

from idleneſs that can be conceived. Vapid, after a two hours ride in the park, two hours ſpent in dreſſing, five in dining, and the reſt in the theatre, and a ſupper-viſit till midnight, goes to bed with a degree of fatigue, which few of our day-labourers experience, and complains next day of the vaſt quantity of buſineſs he went through, as if to any uſeful purpoſe. The truth is, we are apt to blame an idle man becauſe we think he is a man of mere pleaſure and ſuffers nothing, but whoever will make the experiment cannot fail to be convinced that, independent of the ſerious evils ariſing from idleneſs, it is attended with very conſiderable pain, anxiety, and fatigue. It is indeed, comparatively, the moſt miſerable of all lives. Every one affords ſome eaſe, ſome variety, and ſome conſolation; but an idle life is 'an eternal renovation of hope, with a perpetual diſappointment.' Beſides, it is peculiar to an idle man to be without all mental reſources; what pleaſure or amuſement he receives others muſt furniſh; and we find him, accordingly, ſometimes indebted to the managers of the opera, and ſometimes to the itinerants of a puppet-ſhow; ſometimes to the debates of ſenators, and ſometimes to the quarrels of fiſhwomen; at one time, ſleeping at the choruſſes of an oratorio, and at another rouſed by the whiſpers of a tea-table; now faſcinated by the charms of an auction-room, and now rivetted to the ſhow-window of a print-ſhop. Nothing comes amiſs to him. The ſublime and the low, the beautiful and the deformed in nature and art, are alike tributary to his reſources. He has no enemy but time, and no perſon he wiſhes to run away from but himſelf.

An idle man is often fooliſh, ſometimes criminal, but, conſidering the pains and penalties of idleneſs itſelf, is always an object of pity. If a laborious man, one whoſe neceſſities compel him to toil, envies an idle man, the impreſſion is merely tranſitory; perhaps an ignorant wiſh; of which he will be aſhamed, a very few hours after having endeavoured to mend his ſituation by idleneſs. In fact, idleneſs is the greateſt and moſt unwarrantable perverſion of the human intellect. Nature, in our birth, has made no proviſion for idleneſs. On the contrary, the conſtitution both of body and mind is ſuch, that the faculties of them are weakened by not being exerciſed. That exerciſe, at the ſame time, muſt be directed to ſome good and profitable end, otherwiſe it will ſtill be idleneſs under another name. That perpetual round of amuſements and faſhionable employments in which many perſons of wealth and rank indulge themſelves, deſerves no more to be called buſineſs or induſtry, than the movement of a rocking-horſe deſerves to be called riding.

Many who have calculated how much of their lives has been ſpent in doing nothing, have declared their aſtoniſhment and ſhame at the reſult. The ſuperfluous hours of ſleep amount to a fourth of the lives of many thouſands; to this let us add the time dedicated to amuſements for which there is no neceſſity, and we ſhall not be ſurpriſed if the half of ſuch lives is conſumed in vain. The important purpoſes of human reaſon are forgotten, or defeated, and the utmoſt that an honeſt epitaph could ſay of one of the perſons here alluded to, would be that he *lived half his days and died.*

But the miſchiefs of idleneſs are not merely negative. It is a property in our minds never to reſt from employment of ſome kind or other. Men who are to all appearance doing nothing, are often doing ill. Vices of all kinds ſpring up and flouriſh in the minds of idle men. This is as obviouſly the caſe in the minds of the *rich* idle, as of the poor; and it is, from its juſtneſs, ſo trite an obſervation as might have excuſed the omiſſion of it, were it not as juſt to add, that the vices of the idle poor are far more blameleſs than thoſe of the

other; they are confined to themſelves, and generally end in a ſpeedy puniſhment of ſome kind; whereas the *idle* follies and vices of the rich, ſpread wickedneſs over a great ſurface. It is the pride of the latter to make others ſuffer by their indulgences, to keep no company whom they do not make worſe, and viſit no place where they do not leave the contagion of evil example.

Nothing ſo ſoon becomes a habit as idleneſs, and nothing is cured with more difficulty. Temporary vices or follies generally cure themſelves. It is only when frequent repetition renders more frequent repetition neceſſary, that their effects are to be deplored; when they taint the conſtitution, and, to ſpeak medically, when the acute diſorder becomes chronical. Could any thing remedy idleneſs, an appeal might be made to the ſhortneſs and uncertainty of time, to the numerous duties of a thinking being, to the obligations we are under to do as much good to others, and give as much improvement to ourſelves, as lies in our power, and to the numerous faculties with which nature has furniſhed us. Such an appeal is made in vain to thoſe whoſe wealth can ſupply a ſucceſſion of idle follies, and, in the popular opinion, ſcreen both the abſurdity and the wickedneſs of a uſeleſs life. It will not, we truſt, be equally neglected by thoſe whoſe errors of this kind have been few, whoſe relapſes have been followed by ſhame, and who have not forgot that the obligations of duty ought to precede the indulgence of the ſenſes. We may all be conſcious how much of our time has paſſed as much without enjoyment as without uſefulneſs; and we cannot but be ſenſible that even in human opinion, idleneſs is the moſt contemptible of all vices, and the accuſation is never brought againſt us without exciting emotions of the moſt unpleaſing nature. To call a man idle, or to ſay that he lives a life of idleneſs, is to accuſe him of much more than the words ſimply may be thought to imply.

The following ſentiments of an eminent writer on this ſubject, may not improperly conclude this paper. 'Indolence,' ſays he, 'is one of the vices from which thoſe whom it once infects are ſeldom reformed. Every other ſpecies of luxury operates upon ſome appetite that is quickly ſatiated, and requires ſome concurrence of art or accident which every place will not ſupply; but the deſire of eaſe acts equally at all hours, and the longer it is indulged is the more increaſed. To do nothing is in every man's power; we can never want an opportunity of omitting duties. The laple to indolence is ſoft and imperceptible, becauſe it is only a mere ceſſation of activity; but the return to diligence is difficult, becauſe it implies a change from reſt to motion, from privation to activity.'

'It is certain,' ſays the ſame author, in another place, 'that any wild wiſh, or vain imagination, never takes ſuch firm poſſeſſion of the mind, as when it is found empty and unoccupied. The old peripatetic principle, that *Nature abhors a vacuum*, may be properly applied to the intellect, which will embrace any thing, however abſurd or criminal, rather than be wholly without an object. Perhaps every man may date the predominance of thoſe deſires that diſturb his life, and contaminate his conſcience, from ſome unhappy hour when too much leiſure expoſed him to their incurſions; for he has lived with little obſervation either on himſelf or others, who does not know that to be idle is to be vicious.'

[E. X.

DIALOGUES OF THE DEAD.

To the Editor of the Universal Magazine.

SIR,

I flatter myself, that the following ingenious Dialogue, will form an agreeable Addition to your spirited and well-chosen Miscellany. It is the Production of the late Mr. James Hay Beattie, *Son to the celebrated Dr.* Beattie. *Mr.* Beattie *died a few Years ago, to the lasting Regret of all who knew him; and, I may safely add, greatly to the loss of the Literary World. His Abilities were of a superior Kind, eminently calculated to adorn most Branches of Science. He left behind him several Fragments both in Prose and Verse, which his Father has lately printed privately, and given Copies of to the particular Friends of the Deceased, among whom I have the Honour to be reckoned. As the Volume is not intended for Publication, the following may be considered as possessing the Charm of an original Contribution. There are other Parts of these Essays and Fragments, which I may perhaps send to you hereafter.—Meantime, I am, Sir, yours,* D. E. R.

DIALOGUE I.

ADDISON.—JOHNSON.

ADDISON.

I AM happy in this opportunity of expressing my thankfulness for a work, which makes every friend of learning greatly indebted to you; as it gives additional strength and perspicuity to the best language now spoken on earth.

JOHNSON.

No, sir: if any thanks are to be bestowed on this occasion, it is my business to bestow them. Additional strength that cannot receive, which is not already strong; and more perspicuous that cannot be rendered, which is not already clear. The student may inquire, and the dictionary may retain; but, without the previous efforts of the author, in smoothing the rugged paths of grammatical literature, vain were the researches of the studious, and vain the industry of the lexicographer.

ADDISON.

But mankind have another cause of gratitude to you. You have endeavoured, and with success, to instruct them in morality, as well as in criticism. Your Rambler—

JOHNSON.

And how do you like the Rambler?

ADDISON.

I am sorry to say the style of it is not such as I can highly approve: it is more exceptionable than that of your latter works, your Lives of the Poets in particular. Yet even these have too many of the *dulcia vitia*, which some old critics objected to in Seneca, whom I think you resemble in more respects than one. But the matter of the Rambler is in general excellent, if it be not in some places rather too misanthropical.

JOHNSON.

Aye, aye, misanthropical! So of me says every one who has viewed the tumults of the human soul only from a distance; who has perceived the more violent effects of prejudice and passion, without seeing from what causes they might have originated. You, sir, passed your time in affluence, prosperity, and ease; supported by the applause of literature, and the patronage of greatness; you were kind to others, for others were kind to you. My genius bloomed in a desert; and from that desert it was not drawn, till the winter of life had repressed its vigour, and tarnished its beauty. My days were spent in sick-

neſs and in ſorrow; agitated by fruitleſs hope, and chilled by unforeſeen diſappointment. That from this ſeverity of external circumſtances I might acquire a ſeverity of external behaviour, why is it to be wondered? All men have their infirmities, and I had mine. Yet theſe conſequences of adverſity did not contaminate my heart; which was ever a friend to the beſt intereſts of mankind, and ever true to the cauſe of religion and virtue.

ADDISON.

I am not ignorant, that the manners of every man are affected by his condition, even as the fruit of a tree receives a tincture from the ſoil that produces it. Nor am I ignorant of your many virtues, which have ſecured my eſteem and reverence, and will preſerve to you the eſteem and reverence of all good men, let petty critics nibble at your character as they pleaſe. I know too, that if there was a little peeviſhneſs in your writings and converſation, it muſt be attributed to bad fortune, and to no badneſs of heart: which made me ſpeak ſlightly of thoſe paſſages in the Rambler with which I am diſſatisfied.

JOHNSON.

But you threatened to object to my ſtyle: did you not?

ADDISON.

I did: I think it has too unwieldy and too uniform a dignity. In compoſition even excellence itſelf will tire, if continued without variety. And your very beſt performances, from too free a uſe of uncommon words, and from a conſtant endeavour at quaintneſs, antitheſis, and wit, are deſtitute of that ſimplicity, without which there can be no true elegance.

JOHNSON.

A very delicate obſervation indeed! and from one at whoſe hands I had a right to expect it! On whom have I laviſhed the honours of literary applauſe more liberally than on you? Have I not ſaid, that, 'whoever wiſhes to attain an Engliſh ſtyle, familiar but not coarſe, and elegant but not oſtentatious, muſt give his days and his nights to the volumes of Addiſon?'

ADDISON.

You have indeed beſtowed on me greater praiſe than I deſerve. But I can hardly think your praiſes of my ſtyle come from your heart, when I ſee you ſo unwilling to practiſe yourſelf what you recommend to others.

JOHNSON.

Sir, I am not accuſtomed to ſpeak but from the heart; nor will I ever recommend to others what I myſelf would not practiſe. I have laboured my ſtyle with the greateſt attention: I have endeavoured to make it, as I wiſh it to be, cloſe without obtenebration, perſpicuous without langour, and ſtrong without impetuoſity.

ADDISON.

And my greateſt objection to it is, that you have laboured it too much; or, at leaſt, that its elaborateneſs is too apparent. It ſavours more of art than of nature, more of the midnight lamp than of the pure radiance of noon; and in your readers either produces inattention to the ſenſe, while they are occupied in conſidering the words by which it is expreſſed; or makes them doubt the ſincerity of one, who ſeems leſs concerned what he ſhall ſay than how he ſhall ſay it.

JOHNSON.

Your remarks are ſpecious, ſir; they are ſpecious; but they are ſpecious only. They are the remarks of a man adapting rectitude to his own practice, not forming his practice by the rule of rectitude. And I will now declare, ſince you have driven me to it, that though I think your compoſition light and lively, and therefore recommend it as a model to ordinary writers, I cannot help obſerving in it a colloquial imbecility, to the ſtandard of which a man of energetic thought could not, without danger of enervation, ſubject himſelf. A man of genius, ſir, will diſplay the coruſcations, or rather the ſteady luſtre, of that genius, equally by the manner and by

the matter, equally in his ſentiments and in his diction.

ADDISON.

To this I object not; but at the ſame time I beg leave to ſay, that genius may be as much ſhown in ſimple as in pompous writing. *Artis eſt celare artem.* And, if you would hear me with patience and impartiality, I might perhaps convince you, that it would not have been hurtful to your compoſitions, if you had ſoftened their oratorical rigour with a little of that *colloquial imbecility* which you cenſure in mine.

JOHNSON.

Well, well; you ſhall be heard with patience. I muſt allow that you poſſeſs a facility of expreſſion which is not unpleaſant. You have a mind well furniſhed with the ſtores ſubſervient to elegance and utility; but your thoughts are in energy deficient, becauſe you are too little ambitious of adding ornament to elucidation. You have in you, ſir, too much of the playful and pliant companion, and too little of the dignity of an author.

ADDISON.

That I take to be a great compliment. And perhaps our preſent contrariety of opinion might make us mutually deſire the converſation of each other; ſince you are as willing to object, as I am to be praiſed; and ſince I receive as commendation what you ſpeak as cenſure.—However, you have allowed me to examine your notions of ſtyle, and I will not defer that topic any longer. You will doubtleſs agree with me, that ſpeech was intended to convey the ſentiments of men from one to another; and that, therefore, its firſt and moſt eſſential quality is, to be underſtood.

JOHNSON.

Yes: I admit that language muſt be intelligible; and that it was fabricated as a vehicle for human cogitation.

ADDISON.

Since, then, we agree in this, you will alſo allow, that of two words having the ſame ſignification an author ought to prefer the more intelligible.

JOHNSON.

I might perhaps agree with you in general upon that point. But are there not words, ſullied by the mouth of the multitude, which from meanneſs or vulgarity, become unſuitable to the majeſty of compoſition?

ADDISON.

If a word, conveying an idea with meanneſs, either inherent in itſelf or acquired by aſſociation, be compared with another word which conveys the ſame idea without meanneſs, the ſignifications of thoſe words are in ſome degree different, and therefore they are not included in my propoſition.

JOHNSON.

Perhaps you may be right. But are there not words, whoſe venerable magnitude gives them an elegance and a dignity ſuperior to that of the more diminutive parts of ſpeech? Cant words, and vulgar words in general, are ſhort. Your friend Swift will tell you ſo.

ADDISON.

Yes: but he will not tell me, that ſhort words are always either cant, or vulgar.—I allow, that, in certain circumſtances, even in proſe, one word may be preferable to another for the ſound only. But I can never admit, that ſound is more valuable than ſenſe; or believe, that a reader, when he meets with a word that he does not underſtand, will think his ignorance compenſated by his diſcovering that the word in queſtion conſiſts of ſix or ſeven ſyllables, and ends with *—ation*, or *—oſity*. If it were to be eſtabliſhed as a rule, that one expreſſion ſhould be preferred to another for the ſound merely, without its being conſidered whether common readers could underſtand it or not; we might ſoon expect to ſee the words *anſwering* and *noiſy* baniſhed from our language, that their place might be ſupplied by the Greek *polupheliſbois* and *apameibomenos*. I muſt therefore maintain, that one word is to be choſen in preference to another for the ſake of the *ſound*, only

when the ſenſe is in both exactly the ſame, and in both equally perſpicuous.

JOHNSON.

And I muſt, I think, give my aſſent to your former propoſition thus limited and explained. But ſurely you do not mean to inſinuate, that an author muſt uſe no word which cannot by the vulgar be underſtood.

ADDISON.

By no means. I know that an author may have occaſion to mention many things that the common people do not underſtand, and therefore have not language to expreſs. But I ſtill think, that he ought to prefer a word which the vulgar can underſtand to one which they cannot, if it convey the ſame meaning with equal elegance.

JOHNSON.

I ſee that you adhere to your rule, and will oblige me to agree with you.

ADDISON.

Do you then renounce *fragility*, *ſteni-reſponick*, *detruncation*, and other unwieldy favourites, whoſe ſenſe may be expreſſed in plain Engliſh words, with equal elegance and much greater perſpicuity?

JOHNSON.

Sir, ſir, you have a puerile mode of argumentation, which you muſt have learned by converſing with the *rabble* of London in your diurnal papers: my periodical lucubrations had a loftier aim. Make me a ſpeech to confirm your doctrine, and I will confute it; write me a ſyſtem and it ſhall be overturned; but do not haraſs me with the aſſiduous importunity of queſtion and inference, as if you were putting interrogatories to a ſchool-boy.

ADDISON.

If my arguments are juſt, do not reject them as childiſh; and remember your promiſe. that you would hea me with impartiality and patience.

JOHNSON.

Well: perhaps I may be inclined to allow, that my diction might have been improved in intelligibility, by the removal of ſuch words as thoſe you object to. But where then would have been the cadence of my periods, the pomp of my ſonorous phraſeology, the——

ADDISON.

You agreed with me, that in ſtyle perſpicuity is the firſt thing to be conſidered; and that it is to be embelliſhed by attention to the ſound, only when that can be done without injury to the ſenſe. But, even with regard to ſound,—do you think that Virgil would have been accounted an harmonious poet, if he had continued through the whole Eneid that ſtrain of verſification, however elegant and ſublime, in which he deſcribes the ſtorm in his firſt book; or that Homer would have been, in your opinion, to be commended, if he had related the meeting of Penelope and Ulyſſes, or the parting of Hector and Andromache, with the ſame thundering impetuoſity of numbers, which he employs upon the ſtone of Siſyphus, or the horſes and chariot of Neptune?

JOHNSON.

No: I allow, that harmony of ſtyle is merely relative, and deſerves praiſe only when it ſuits the ſubject; and that the ſame ſtrain of eloqnence, if too long continued, induces langnor from its want of diverſification, as well as diſplacency from the appearance of exceſſive art.

ADDISON.

Is it your opinion, then, that the pompous uniformity of diction, which we find in the Rambler, can pleaſe by its variety; or that it can be adapted to each different ſubject, when it is equally applied to all:—to the trifling as well as the magnificent, to praiſe and to cenſure, to argument and to narrative? Do you not think that the ſame objections may be made to the ſtructure of your ſtyle, as to the ſound; if both ought to poſſeſs, what you have given to neither, variety ſuited to the ſubject? And would

not one be apt to imagine, that an author, who, by the ſound and compoſition of his language, elevates equally ſublime and familiar ideas, might run ſome riſque of falling under the imputation of bombaſt?

JOHNSON.

Sir, you grow intolerable; but when were Whigs otherwiſe? You ſtill forget that you are not now engaged in diſquiſition with one of the populace of London. Yet I would not have you imagine, that ſuch arguments can affect or change my mind. No, ſir, if I ceaſe to anſwer, it is more from laſſitude than from conviction.

ADDISON.

And yet my arguments are not, in my judgment, either tedious or inconcluſive. But you promiſed not to be angry or partial; and I know you too well to entertain any *ſerious* doubt of your ſincerity. A little irony now and then is a good ſeaſoning to converſation. Tell me now, my good ſir, your real opinion; and let us then amuſe ourſelves with ſome topic more ſuitable to the tranquillity of Elyſium.

JOHNSON.

Why, ſir, if you will have it, I may poſſibly allow, that you are partly in the right. If I had my ſtyle to form anew, I ſhould perhaps make it, in a greater degree, elegant without conſtraint, dignified without ambitious ornament, ſtrong without rigidity, and harmonious without elaboration.

*** *The future Communications of* D. E. R. *will be highly acceptable.*

GLEANINGS.

SPARSA COLLEGI.

ALTHOUGH the vulgar uſually expect that a writer ſhould be as virtuous as his works, and ſhould practice all he recommends, people of more ſenſe are aware that if a man were to recommend no virtues but what he practices, the beſt works would be very barren of inſtruction. Dr. Johnſon has perhaps offered the beſt excuſe for authors in the following, which appears in one of his letters to Mrs. Piozzi: 'I have through my whole progreſs of authorſhip honeſtly endeavoured to teach the right, though I have not been ſufficiently diligent to practice it, and have offered mankind my opinion as a rule, but never profeſſed my behaviour as an example.'

If an exceſſive opinion of our own conſequence was not, in a very great degree, inherent in us, many inſtances of outrageous vanity would ſurpriſe as well as diſguſt the more rational part of mankind. It is ſaid of the Chineſe, that before their intercourſe with the Europeans taught them geography, they believed that China was the centre of the globe, and that all the other kingdoms, which amounted to ſeventy-two, were diſperſed round their empire in the form of little iſlands, as ſatellites deſtined to decorate their planet.

There are many words in our language of which the proper meaning is loſt, and in common converſation we uſe many words to which we never ſeem deſirous to affix any meaning at all.

The cynic philoſophers deſpiſed the fine arts; and when a watch was ſhown to Diogenes, he ſaid, 'It is an excellent invention againſt ſupping too late.' From a great variety of examples in the writings of the ancient philoſophers, it appears that men have ever been fond of ſacrificing truth to the reputation and applauſe which follow a neat witticiſm or a terſe expreſſion.

In the year 1749, were executed at Tyburn, Uſher Gahagan, Terence O'Cotner, and Joſeph Mapham for filing gold money. Gahagan and Connor were papiſts of conſiderable families in Ireland; the former was a

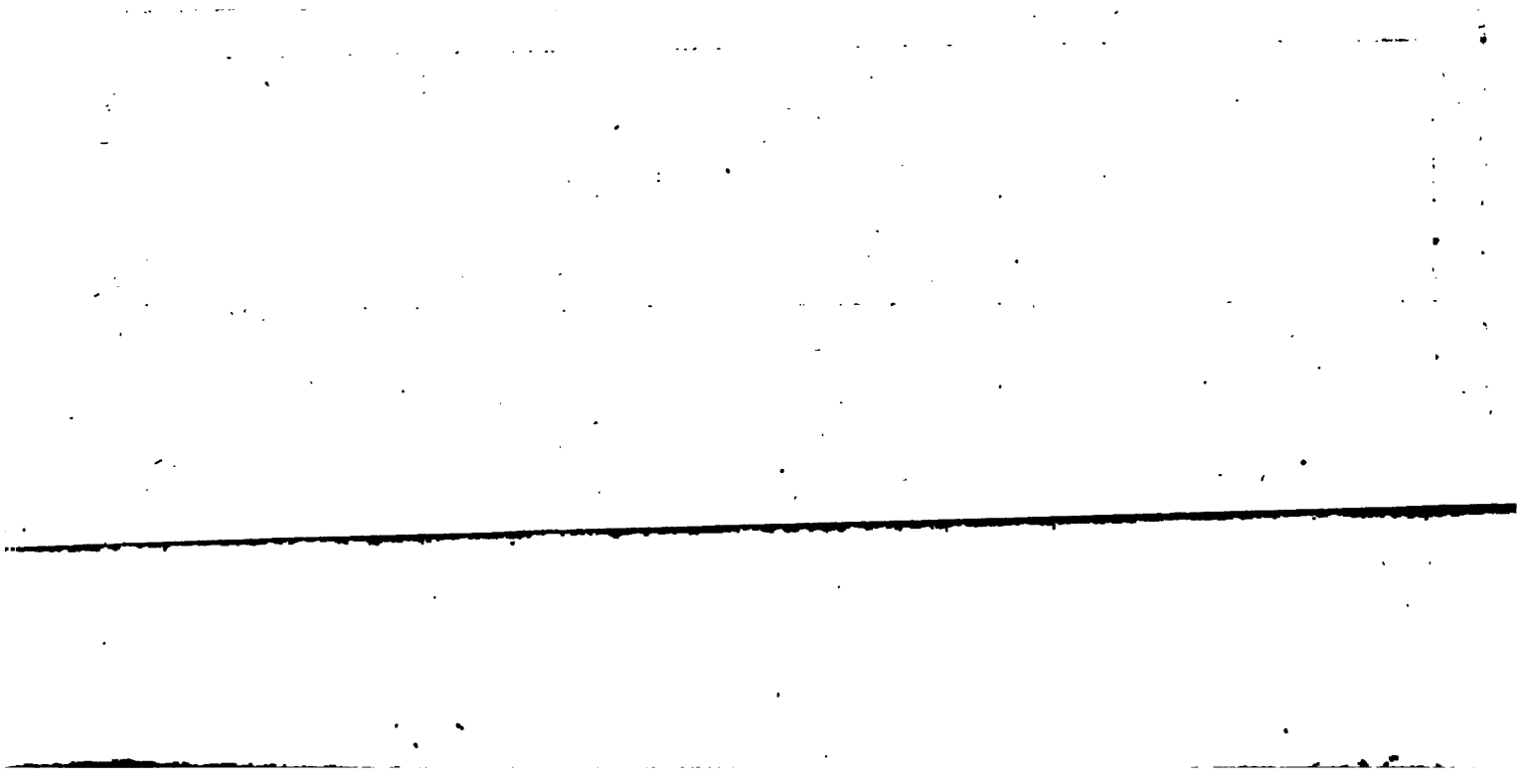

ter feeding ſheep whoſe wool is remarkably fine. The middle of the county abounds with meadows and rich arable ground, and the north ſide is ſhaded with extenſive woods, that uſed to ſupply fuel for the iron-works when they were in a flouriſhing ſtate. This plentiful county, therefore, ſupplies numerous commodities, the chief of which are corn, malt, cattle, wool, wood, iron, chalk, glaſs, fiſh, and fowl. It is particularly famous for its wheatears, a ſmall delicious bird, of the ſize of a lark, not much inferior to an ortolane, which is taken on the ſouth-eaſt Downs in the following manner: a turf is cut up, about a foot long and half a foot broad: in the cavity is placed a ſnare of horſe-hair, and the turf turned with the graſs downward to cover the greateſt part of the hole. Theſe birds are naturally ſo timorous, that the ſhadow of a cloud; or any thing that moves on the ground, makes them fly into theſe little pits for ſhelter, where they are taken. With reſpect to manufactures, Suſſex is not diſtinguiſhed for any but that of gunpowder, at Battel, and of needles at Chicheſter. The principal rivers are the Arun, Adur, Ouſe, and Rother. Chicheſter is the capital.

ON THE SPIRIT OF CHRISTIANITY.

THERE are few expreſſions in more general uſe, and yet leſs generally underſtood, than *the Spirit of Chriſtianity*. We are perpetually appealing to it as the criterion of moral good and evil, without duly conſidering how very comprehenſive it is, and how little accommodating to the paſſions and prejudices of individuals. But there are times when it is more eſpecially incumbent upon us to acquire a juſt notion of thoſe expreſſions, which conſtitute the fundamental principles of our actions, both as individuals and members of civil ſociety; and there cannot, perhaps, be any time ſo proper for this conſideration, as when religion is attacked by appeals to hiſtory for the effects it has produced upon mankind, and when thoſe appeals have induced perſons of weak minds to entertain the moſt dangerous prejudices againſt Chriſtianity.

Thoſe who appeal to hiſtory for the effects which religion has produced upon mankind, do not act in the faireſt manner. They ſelect examples of perſecution and of war, upon account of religion, and they aver that ſuch facts make indiſputably for their argument. But they have not the candour, or poſſeſs not the diſcrimination which diſtinguiſhes *pretence* from *ſincerity*; and here is the rock upon which all ſuch writers have ſplit. The page of hiſtory too frequently ſhows that nations have been depopulated, wars of extermination has been undertaken, and every crime perpetrable by human wickedneſs has been committed, under the *pretence* of promoting or defending religion. But hiſtory does not, in one inſtance, ſhow that this was any thing more than a pretence. On the contrary, by a recital of ſuch enormities, it evidently ſhews, that the perpetrators were groſsly ignorant of religion, and uſed the name merely to cover the nefarious nature of their actions. Will any man in his ſenſes aſcribe the maſſacre of St. Bartholomew, or the Iriſh maſſacre, to religion? Will he pretend to ſay that the perſons who committed ſuch outrages were acquainted with the principles of Chriſtianity, or influenced by its ſpirit? As well may he ſay that the many atrocities committed lately in a neighbouring nation, are to be aſcribed to a ſpirit of liberty, or a knowledge of its nature.

The true way to judge of the effects religion has produced, is to obſerve its influence upon thoſe who follow its precepts, not upon thoſe who uſe it as the cloke of hypocriſy, or the engine of oppreſſion. If we

GUILDFORD
Dorking
Ryegate
Godalming
Haslemere
East Grinstead
Horsham
Cuckfield
Steyning
Lewes
Brighthelmstone
W. Tarring
N. Shoreham
Seaford
Denton
Newhaven
Rodmell
Ditchling
Albourne
Clayton
Hamsden
Coombs
Beeding
Washington
Ashurst
Twineham
Wivelsfield
Chailey
Barcombe
Ringmer
Laughton
Hellingham
Berwick
Arlington
Hurstpierpoint
Slinfold
Billingshurst
Shipley
Cowfold
Warnham
Rusper
Crawley
Worth
Kidbrook
Lindfield
Maresfield
Nutley
Fletching
Newick
Chiddingly
Ardingly
Framfield
Ringmer
Mailing
Firle
Rotherfield
Mayfield
Wadhurst
Frant
Withyham
Penshurst
Fordcombe
Speldhurst
Tunbridge Wells
Southborough
Tonbridge
Penshurst
Eridge
Groombridge
Crowborough
Uckfield
Buxted
Maresfield
Fletching
Newick
Chailey
Barcombe
Ringmer
Laughton
Hellingham
Berwick
Denton
Newhaven
Seaford
Rodmell
Brighthelmstone
Lewes
Steyning
Beeding
Washington
Ashurst
Twineham
Albourne
Clayton
Ditchling
Hamsden
Coombs
Parham
Findon
Worthing
Goring
Ferring
Angmering
Littlehampton
Arundel
Amberley
Pulborough
Billingshurst
Shipley
Cowfold
Horsham
Slin

This we ſhall be able to do moſt ſucceſsfully by ſtudying the genuine *ſpirit of Chriſtianity*, and by conſidering that if it produces no effect upon the temper and habit, if it does not make us averſe to evil habits and irregular diſpoſitions, our uniting of the external rites and ceremonies is mere hypocriſy, more contemptible than an avowed rejection of religion. When a man makes an open avowal of his rejection of Chriſtianity, however we may pity him as having rejected all that can make life happy and death eaſy, yet, as a man, he is no longer to be tried by laws to which he refuſes an aſſent. Whether he be more or leſs to blame than another, who profeſſes the Chriſtian religion, and lives contrary to its chief precepts, is a queſtion of no great difficulty. But it is a queſtion of ſome importance, becauſe if ſuch be the general character of a nation, we may be certain that they know little of the genuine *ſpirit of Chriſtianity*.

If we reflect upon the conſequences which would flow from imbibing the Chriſtian ſpirit, and carrying it into private life, it muſt ever be a matter of deep regret that ſo little attention is paid to it. The mutual forbearance it enjoins, the contentedneſs with our ſituation, and the forgiveneſs of injuries; theſe three principles only could not fail to conſtitute peace and happineſs. And with reſpect to the major part of the community, that part which has not the means of artificial happineſs, *wealth* and *rank*, how enviable *by* men of wealth and rank would their ſituation be, if to induſtry they added ſobriety, and to ſobriety, good-will and mutual forbearance!

Theſe conſiderations are of unqueſtionable importance to this nation. It is not of much concern to us what other nations do; our anxiety ought to be employed on ourſelves. We have for ſome centuries enjoyed the bleſſings of a pure and mild religion, and we have profited by it. We owe all we poſſeſs of rational happineſs to it. The good it has diffuſed is not *my* ſuppoſition. I am not taking it for granted. It is a matter of certainty. Politicians and economiſts may make it a matter of calculation. What is there amiable in our national character that may not be traced to our religion? Whence our humanity, generoſity, and magnanimity? Are theſe advantages inconſiderable? Are they worth preſerving, or are they to be given up? And given up they muſt be, if we beſtow all our attention on the empty boaſting and profeſſing of Chriſtianity, while we forget to cultivate its *ſpirit*. It is that only which benefits mankind, and which can exiſt in ſplendour though it outlive all pomp and ceremony.

If we allow, which I preſume we may fairly do, that all the crimes of individuals and of nations, proceed from a want of mutual forbearance, a conſequent ſpirit of revenge, and from avarice and ambition, the latter being diſguiſed under the names of honour and dignity, we ſhall form a juſt notion of the value of that religion, which places the happineſs and proſperity of mankind upon more ſure and ſolid foundations. We ſhall likewiſe ſee that the moſt proſperous and flouriſhing of the ancient nations enjoyed but a temporary ſecurity, which was owing to their admitting revenge and ambition among the liſt of dignified virtues, and their ignorance of Chriſtianity, which has placed ſuch miſtaken notions in their true light. Schoolboys are charmed with the actions of the Alexanders and Cæſars of antiquity, but when their ſenſe becomes matured, the objects of their veneration become the juſt objects of their ſcorn. The mild ſpirit which Chriſtianity has diffuſed over the world has greatly leſſened the evils of war, has ſhortened its duration, and by teaching men the principles of benevolence, has frightened tyrants from that unlimitted exerciſe of power which prevailed when a nation was forced to ſubmit to the will of one man. In truth, even thoſe who affect at preſent to deſpiſe Chriſtianity, owe to it

all thoſe maxims and principles of generous and mild politics which they are anxious to propagate. They refuſe, indeed, to own the obligation, and aſcribe the whole to human reaſon and ſomething they call philoſophy. They forget that Greece and Rome could boaſt of philoſophers who carried the powers of human reaſon as far as any modern ever did, and as far probably as they could be carried, without the aſſiſtance of reveſation. But they were nevertheleſs ignorant of thoſe virtues, which form the baſis of human happineſs, contentment with our lot, and mutual forbearance. Forgiveneſs of injuries enters not into their ſyſtem, and yet if we diſcard it from ours, what becomes of the peace of ſociety? We ought, therefore, to reflect, that in proportion as we omit the practice of thoſe virtues, which Chriſtianity enjoins as the foundation of human happineſs, we depart from our allegiance to its author, we reject its ſpirit, and become atheiſts and anarchiſts in every thing but the name.

When we conſider the natural tendency of the Chriſtian religion upon the ſtate of mankind, and the actual effects it has produced wherever it has been duly cultivated, we look upon the oppoſition it frequently meets with as a ſoleciſm, a ſomething ſtrangely inconſiſtent and inexplicable, becauſe they who oppoſe it, when preſſed hard to give us a ſubſtitute, are forced to borrow their ſcheme from the very ſyſtem they deſpiſe. Modern infidels are not aware, or do not chooſe to acknowledge, that even though they live in a conſtant neglect or contempt of every external obſervance Chriſtianity enjoins, they cannot diveſt themſelves of the effects it produces on their minds, and which effects are conveyed to them hereditarily, by education. If a man ſhould ſay, I deſpiſe the language of my country, and it becomes me to form a language for myſelf, more rational and conſiſtent, and with more harmony in it; we ſhould not have a very favourable opinion of that man's underſtanding, and indeed we ſhould be witneſſes of his lunatic attempts to diveſt himſelf of that which he could never part with. The caſe, however, is preciſely the ſame with him who endeavours to reject Chriſtianity. Its influences have extended from generation to generation, each ſucceeding one improving upon that which went before, however imperceptible that improvement may be.

If a ſtranger to Chriſtianity, and who had never heard the name, were to enquire what it is, the anſwer would be, that it is a ſyſtem which enjoins nothing but what experience otherwiſe will prove to be beneficial, and forbids nothing but what experience will prove to be hurtful to the peace and happineſs of mankind. No rational creature could heſitate a moment in adopting ſuch a ſyſtem, and as no rational creature has ever been able to prove that Chriſtianity is other than as here repreſented, and as we, as a nation, have long been ſenſible that it is the only religion calculated to make men happy, the blame will lie heavy, indeed, if when we ſee other nations ſuffering from ignorance of its precepts, we ſhould content ourſelves with an empty profeſſion only, and neglect thoſe duties, thoſe habits, and that temper, which truly conſtitute the *ſpirit of Chriſtianity*.

C.

ON THE ABSURDITY OF PRODIGALITY.

THAT poverty is the greateſt of all evils, might paſs for an undeniable propoſition, if experience could not be placed againſt it; if we did not every day ſee many hundreds ſoliciting the ſmiles of poverty with all the eagerneſs and addreſs of the moſt enraptured lover. Yet while we are convinced of a fact which is ſo often preſented before our eyes, we

ſeek in vain to account for it. We never think of attributing the love of poverty to the religious principle of mortification, and when we revolve the ſubject in other lights, we are ſtill at a loſs even for a tolerable conjecture. If we conſider what poverty is, and what its accompaniments are, we ſee nothing in it that can engage the affections of a rational creature. We cannot conceive that any man can be pleaſed with inſult, ſhame and neglect, from which a ſtate of poverty is almoſt always inſeparable. On the other hand, we ſee advantages ariſing from the poſſeſſion of riches, which it is impoſſible to deſpiſe; and we do not wonder that the purſuit of riches very generally engages the attention of mankind. The exceptions to this rule (which are not few) are thoſe who run toward poverty with as much precipitation as the others fly in the chace of wealth.

The prodigal is, indeed, a ſoleciſm in human nature. It is impoſſible to form an idea of a rational being ſquandering his wealth in a few years on trifling objects, and hoarding up nothing but a fund of repentance, and ſhame. Pride, it will be ſaid, leads men to extravagant expences. If ſo, pride is the moſt inconſiſtent of all the paſſions. It is inconſiſtent with itſelf, and is indeed the moſt cunning and deceitful of all the tempters of mankind. If pride is to be gratified, it cannot be by reducing ourſelves to a ſtate of poverty, where the leaſt appearance of pride is accompanied with almoſt proverbial contempt. If the pride of dreſs is an object, can it be promoted by that which 'clothes a man with rags?' If the pride of a ſplendid houſe and luxurious table be deſirable, how wiſe is it to reduce ourſelves to the neceſſity of ſubſiſting on precarious bounty in a roofleſs cot?

The queſtion ſtills recurs, how are we to explain all this? It may be ſaid, that there is a pleaſure, or happineſs, in the expenditure of money upon follies and amuſements which cannot be reſiſted. But this is only offering one inconſiſtency for another. No man, we naturally think, in his ſenſes, would deem a ſmall portion of happineſs an equivalent for a far greater portion of future miſery, of miſery without hope, and without conſolation. The parable of him who was content to receive all his good things in this life, is not held out to us as an example worthy of imitation, but as an inſtance of egregious folly. Still more foolish will this conduct appear, when we reflect upon all the conſequences of prodigality, which are not only thoſe which uſually accompany poverty, but alſo the loſs of reputation and character.

It may, again, be ſaid, that the conduct of ſuch men as we are ſpeaking of, is a proof of the ſtrength of *hope* in the human mind, that they, amid all their extravagance, ſtill expect to be able to go on in the ſame career, and that when the laſt guinea is expended, it may be ſucceeded by another. But ſurely this hope, if it exiſts, is of a very extraordinary nature. The moſt ſanguine expectations ſeldom, if ever, ſurvive repeated diſappointments.

If it be ſaid, that the power of example and faſhion is ſuch, as to compel men to extravagant courſes contrary to their better judgment, we are not much nearer a ſolution of our queſtion than we were before. The premiſes, indeed, are not true, and the concluſion muſt, conſequently, be falſe. 'If praiſe,' ſays Dr. Johnſon, 'be juſtly eſtimated by the character of thoſe from whom it is received, little ſatisfaction will be given to the ſpendthrift by the encomiums which he purchaſes. For who are they that animate him in his purſuits, but young men, thoughtleſs and abandoned like himſelf, unacquainted with all on which the wiſdom of nations has impreſſed the ſtamp of excellence, and devoid alike of knowledge and of virtue? By whom is his profuſion praiſed, but by wretches who conſider him as ſubſervient to their purpoſes, ſycophants that entice him to ſhip-

wreck, and cyclops that are gaping to devour him?'

The example and the fashion by which prod gals profess to be guided, extend no farther than to their own circle. All the opinion, the experience, and the common sense of mankind, are against them. There are fashions which are frivolous, yet harmless, which imply no moral turpitude, and lead to no personal, or pecuniary losses of much consequence. Such are the fashions which prescribe the form of a cap, the shape of a buckle, or the hour of dining. But nothing is a fashion, properly so called, which contains all the elements of destruction, and cannot meet with the cool approbation of any man or set of men. Such is prodigality either in individuals or in families, which, while it immediately leads to the ruin of property and credit, lays the foundation for the practice of vices at which they would have once trembled, and of which it would once have been an insult to believe them capable. But experience, in a thousand instances, has shewn that none are so prone to dishonest vices, as those who have been ruined by their own folly.

This, of itself, would be a consideration sufficient to render prodigality disgraceful, and to evince its danger, if there were not too much reason to suppose that prodigality is connected with a certain derangement of the mental faculties. I know of no other mode of accounting for the shocking absurdities and inconsistences of pride and extravagance, but by referring them to a species of lunacy. And I know not any one more likely to succeed, than the treatment which is employed in the case of persons afflicted with other species of madness, namely, their persons subjected to confinement, and their property consigned to the care of their friends, until they recover their senses so far as to employ it in a rational manner. This remark, perhaps, may be honoured with a smile; but had this method been adopted some years ago, should we have seen such shocking revolutions in families as are obvious to the slightest observation, and have been accompanied with disgrace, shame, poverty, and vice, where once we beheld honour, dignity, wealth, and manly virtue. We confine the maniac who has been discovered throwing valuables into the fire and goods out of the window; but is it possible to entertain a greater respect for the understanding of him who has, in a few years, squandered the princely inheritance of opulent ancestors upon cards, horses, strumpets, and sharpers? Which can fairly be said to deserve most pity? Whose confinement ought to be most rigorous? From which are we to entertain the liveliest hopes of recovery?

A. N.

PARTICULARS *of the* ESCAPE *of* JAMES II.

'PRINCES' DISTRESS, AND SCENES OF ROYAL WOE.'

To the Editor of The Universal Magazine.

Sir,

THE events which are now passing in the world, in whichever light we view them, convey lessons of the most aweful importance both to princes and people. Happy shall we be if they do not pass unheeded, and if we do not consider ourselves as unconcerned spectators. Thrones have been overturned, and all the pomp, pride, and grandeur of splendid courts and splendid establishments have fallen in one common ruin. Time only can shew whether the new order of things will contribute more to the happiness of mankind than the old, and whether the severe chastisements which have fallen upon nations and individuals, may not hereafter be considered as marks of the kindness of a superintending Providence. In the mean while, we are apt, and perhaps justly, to give way to our feelings on particu-

lar events, without indulging the proſpect of a great and laſting good which may be in the womb of time. Among theſe feelings I know none more natural (and what is natural we may ſuppoſe is praiſeworthy) than the compaſſion we extend toward fallen greatneſs. In vain does philoſophy tell us that a king is no more than a man, and that he may have deſerved to be hurled from a throne to a ſcaffold, or driven away to ſpend the remainder of his days in obſcurity, an exile in a foreign land, and bereft of all the ſplendours of his former ſtate. Theſe conſiderations cannot ſuppreſs our compaſſion. I know not what philoſophers may preach, or what they may feel, but I cannot help conſidering that ſympathy as ſacred, which is beſtowed upon a Charles, or a Louis, on the ſcaffold; a beggared and expatriated Staniſlaus, or a prince of Orange ſeeking that ſafety in another country, which was denied him in his own.

Meditating on this ſubject, a few nights ago, it occurred to me, that I had in my poſſeſſion a copy of a curious letter written by one of the gentlemen who accompanied James II in his ignominious flight. The various diſtreſſes of that unhappy family, however inclined we may be to trace them to a perverſe ſyſtem of government hoſtile to the true intereſts of their country, are even at this day ſubjects of compaſſion; nor can we read of the minute events contained in the following letter, or any part of the ſubſequent hiſtory of James II, and his miſerable exile, without thoſe feelings which, while they demonſtrate the tenderneſs of our diſpoſition, and our proneneſs to forgiveneſs, lead us, at the ſame time, I truſt, to draw ſuch inferences as may be beneficial to ourſelves and our country. A foreign author ſays, that the Engliſh are very bloodhounds in purſuing a man to puniſhment, but mere women in inflicting the puniſhment.—But I ſhall not take up more of your time with my own reflections upon this ſubject.

The Letter is as follows:

'It was the fatal Tueſday, December 11, 1688, when the nobles were all in arms; on which day were taken the lord Saliſbury, and ſir Charles Hales, at Aſhford, the lord Peterborough, &c. in the iſle of Thanet, and near us baron Jenner, Burter, Graham, Obadiah Walker, Gifford, Leybourn, Kingly, and two ſuppoſed to be their titular biſhops, with ſeveral papiſt gentlemen, viz. the lord Arundel of Wardour's ſon; Hardwich, a merchant; Sing, adjutant to ſir Edward Hales, &c. This was the great work of the day, beſide rifling of popiſh houſes; but the night was attended with ſomething more extraordinary; for the ſeamen, armed with a ſort of emulation at the ſucceſs of the landmen, were reſolved to have a frolic in their way; and, about ſeven at night, under the conduct of William Ames and John Hunt, with about fifty more, chiefly ſeamen, put off in queſt of a prize, and about eleven at night they took a cuſtomhouſe boat, in which proved to be the king, ſir Edward Hales, and Ralph Sheldon. The king was in a particular diſguiſe, and ſo not known that night; but as if his deſtiny deſigned to be ſevere upon him, the ſeamen treated him very roughly above the reſt, though *incog.* One cried out, 'twas father Petre; they knew it to be ſo by his lantern jaws.' A ſecond called him 'Old hatched-faced jeſuit.' A third ſwore, 'twas a cunning old rogue, they would warrant him.' And all night long they welcomed him with theſe rough ſalutations, and perfuming the room with tobacco, the ſmell whereof the king hates. His majeſty was taken at the weſt point, not above a quarter of an hour before the flood would have carried him off; and it was his own fault, that they ſtopt there with ballaſt, which the pilot war againſt; but the roughneſs of the ſea made his majeſty fear they were not ſafe in ſo ſmall a boat without ballaſt: whereby they loſt ſix or eight hours, and ſo were providentially taken. He

was detained at ſea all night, and brought up from Owſe, where he landed, to Feverſham, about twelve, Wedneſday the 12th. Then he was ſuſpected, as he came up the town, and within a quarter of an hour after he was in the inn, fully diſcovered. He was willing by all arts at firſt to conceal himſelf; and at his firſt coming in he called for bacon and eggs, as if he were ſome ordinary man in his diet; whereas he taſtes no meat that is in the leaſt ſalted, as it afterward appeared. He ſeemed caſt down ſomewhat at the noiſe of the rabble: but after ſome recollection, called for ſome ink and paper to write to the earl of Winchelſea; but was ſo diſcompoſed, that he wrote, and tore, and begun again; as if he were overcome with diſorder or fears. Inaſmuch as I was with him before he was diſcovered, he entered into ſome diſcourſe with me. He thanked me, and commended my prudence for not diſcovering him with the firſt, though I knew him as ſoon as any one. He told me, that the rage of the people was up; and now that of the Pſalmiſt was true; 'I, who ſtill the raging of the ſea, muſt ſtill the rage and madneſs of the people,' for he could not. He complained heavily of fears and jealouſies, blown about by ill men; and too many of the black coats had done him that ill office they could never make him amends for. He inſiſted on his integrity; ſaid he had a good conſcience, and could ſuffer and die. He told me, he read Scripture much, and found great comfort in it. He declared he never deſigned to oppreſs conſcience, alter the government, or deſtroy the ſubject's liberties; and at laſt aſked me plainly, 'What have I done? What are the errors of my reign? Tell me freely.' To which, you may be ſure, I made no anſwer. He inſiſted much upon going off, after he was taken; and I believe he put the queſtion to every churchman and layman in the room, to get him a boat, and let him eſcape. He ſaid, the prince of Orange ſought his crown and life; and if he were delivered up, his blood would lie at our doors, for he ſeemed perſuaded they would murder him. 'Now,' ſaid he, 'the opportunity is in your hand; but if you miſs this, it will not be in your power to help me.' He argued much upon theſe words, 'He that is not with me, is againſt me;' and ſermonized half an hour, making reflections on men's coldneſs to ſave him in that extremity. While he inſiſted upon going off, and uſed all motives proper, as he thought, in begging, praying, tempting, arguing, perſuading, reproving, &c. which was far above three hours, the rage of the ſeamen took fire, apprehending he would prevail with ſome to let him eſcape ſecretly; and thereupon aroſe ſome contemptuous words, and no ſmall inſolences offered; which I almoſt think had not happened, if the fear of his eſcape had not run ſo much in their minds, or if his majeſty would have waved diſcourſing ſo much thereof. For the ſeamen much valued themſelves on their charge, and did apprehend their own lives in danger, if he went off; imagining, they had done a ſingular piece of ſervice to the nation, and reſolving there to keep him till orders from the prince, or the lords at Guildhall. And the king himſelf undertook to diſcourſe them, and aſked the ſeamen, 'By what authority do you ſtand here? Am not I your king? And ſure you will not hurt my life. Will you ſtand by me? I'll reward you. If you be my good ſubjects, you muſt obey me. Come, and ſerve me, and get me a boat, and I'll go off.' Afterward, he went ſo far as to regulate their way of keeping guards; bid them ſtand further off; 'Go down, and keep your diſtance;' which ſo enraged them, that ſome of them forgot all decency and reverence to him: inſomuch, that ſir Edward Hales was deſired to take the king off from that diſcourſe, which made him cheap, and proved ſo impolitic and unſucceſsful. But ſtill the rage of the ſeamen increaſed, and

they ſhook hands, and cried, one and all, 'We'll die, rather than he ſhall go off;' got together in a full body, broke out into ſcornful huzzas, and for a while doubled their guard, ſuffering none to go to him, but whom they well knew, loaded their muſkets, and made ready, as if they reſolved to fire upon any that oppoſed their meaſures. This indeed intimidated the king, and his ſpirits ſeemed much down; which made him keep his eye upon the door, and watch all their motions narrowly, and deſire not to be much alone, but the gentlemen to ſtay with him. Toward night, the earl of Winchelſea came, and then it was reſolved to remove the king to a private houſe; which the ſeamen ſtill oppoſed for fear of an eſcape. But my lord pawning his honour for the king's ſtay, the better ſort of them conſented, but the *mobile* ſtill refuſed; and as the king came down ſtairs, I believe more than twenty ſwords were drawn over his head, and ſome threats paſſed; and at the bottom of the ſtairs they ſtopt him near a quarter of an hour. At length, the matter was compounded, upon condition they only ſhould be the king's guards, while he ſtayed. So at length the king was ſuffered to walk down the dirty ſtreet to his private apartments, with the irregular diſorderly crew at his heels.

'When the king had been ſome while in the private houſe, his ſpeech revived, and he was full of diſcourſe, which was chiefly in his own vindication; for he undertook to juſtify himſelf, even in the Magdalen college buſineſs. Only I muſt not forget that he pleaſantly entertained us with a long diſcourſe about St. Winefred and the virtue of her well, and the whole legend of it; as alſo having loſt a wooden croſs, he told us how much it was to be prized, for it was ſir Edward the confeſſor's, and had a piece of the true real croſs in it, on which our Saviour ſuffered; which ſort of diſcourſe was to us, you may imagine, very agreeable. He then wiſhed himſelf with the queen; and bleſſed God, ſhe and his ſon were ſafely arrived abroad. And he was further heard more than once to thank God, that father Petre was ſafely arrived alſo, and ſeemed to expreſs a mighty eſteem for him. As to ſir Edward Hales, he did confeſs, it was by his means he came this way; but ſeemed not much to blame him for his ill-ſucceſs. And when he was told, the country hated him, and never ſpake well of him, he ſaid, that then he was the likelier to be an honeſt man. And being told, that Mr. William Penn was ſeized alſo, he pitied him much, and ſaid, he was a good man, and he was ſure no ill could be charged on him.

'Next day, being Thurſday, 13th, came in two hundred gentlemen from Canterbury and Eaſt Kent, and in the ſight of him declared their concurrence with the prince of Orange; which much afflicted him, for that, he then ſaid, he was not ſafe where he was. And toward night captain Crayford and another captain came from Sheerneſs, declaring the reſolution to deliver up to the prince the fort and the ſhips in the Swale, which is a road under the protection of the fort. Upon the hearing of which, he ſaid, he would conſent to any thing to prevent bloodſhed; but ſeemed extremely afflicted thereat. He was really very melancholy at times, and often ſhed tears. His guards were ſo ſevere upon him, and purſued him from one room to another; and preſſed upon him in his privacies, ſo that he had ſcarce the civilities from the ſeamen, that was due to a gentleman in reſtraint: ſcarce leiſure to be devout, or retire to the calls of nature, ſo over-officiouſly did they guard him. Freſh rumours oft were raiſed of his going off, which fetched the ſcattered ſeamen together, and were the occaſion of freſh heats and inſolences. In this tumultuous manner was the poor king guarded; neither would they ſuffer the gentlemen to take their turns.

'When Friday night came, and

the guards, that were ſent from the lords then at Guildhall, were within two hours march of Feverſham, the rage of the ſeamen increaſed, becauſe the earl of Feverſham was with them, and ſome others they diſliked; they ſwore bloodily, no guards ſhould come in there, and ſo run all to arms. Upon ſight of which the gentlemen were forced to diſpatch away expreſſes to ſtop the guards, and pray them to lodge at Sittingbourn; for doubtleſs if the guards had come that night into town, there had been bloody work; for by what I heard and ſaw, I verily believe the ſeamen would have reſiſted them. At length, Saturday morning came, when the king was guarded out by the ſeamen and gentlemen, and ſo received near Sittingbourn, by thoſe that were ſent for him.'

PHIL-HISTORICUS.

SELECT PASSAGES FROM SHAKSPEARE.

NUMBER XXVI.

KING HENRY IV, PART II.

Concluded from page 40.

Irreſolution.

Northumberland. 'Tis with my mind,
As with the tide ſwell'd up unto its height,
That makes a ſtill-ſtand, running neither way.
Fain would I go to meet the archbiſhop
But many thouſand reaſons hold me back;
I will reſolve for Scotland: there am I,
Till time and vantage claim my company.

The ſimile of the tide, in this paſſage, well exhibits the uncertain and irreſolute deliberation of mind, in which men are apt to be held in ſuſpence, upon the criſis of doubtful adventures. The character of Northumberland, as repreſented in the former play, is here admirably preſerved; timid and wavering, forward in conſpiracy, yet heſitating to join in an action of doubtful iſſue.

Sleep.

King Henry. How many thouſands of
my pooreſt ſubjects
Are at this hour aſleep! O Sleep, O gentle Sleep,
Nature's ſoft nurſe, how have I frighted thee,
That thou no more wilt weigh my eyelids down,
And ſteep my ſenſes in forgetfulneſs?
Why rather, Sleep, ly'ſt thou in ſmoky cribs,
Upon uneaſy pallets ſtretching thee,
And huſh'd with buzzing night-flies to thy ſlumber,
Than in the perfum'd chambers of the great,
Under the canopies of coſtly ſtate,
And lull'd with ſounds of ſweeteſt melody?
O, thou dull god, why ly'ſt thou with the vile,
In loathſome beds, and leav'ſt the kingly couch,
A watch-caſe, or a common 'larum bell*?
Wilt thou upon the high and giddy maſt
Seal up the ſhip-boy's eyes, and rock his brains
In cradle of the rude imperious ſurge;
And in the viſitation of the winds,
Who take the ruffian billows by the top,
Curling their monſtrous heads, and hanging them
With deaf'ning clamours in the ſlippery clouds,
That, with the hurly†, Death itſelf awakes?
Canſt thou, O partial Sleep! give thy repoſe
To the wet ſea-boy in an hour ſo rude;
And, in the calmeſt and moſt ſtilleſt night,
With all appliances and means to boot,
Deny it to a king? Then, happy low, lie down‡!
Uneaſy lies the head that wears a crown.

* This alludes to the watchman, ſet in garriſon-towns upon ſome eminence, attending upon an alarum-bell, which he was to ring in caſe of fire, or any approaching danger. He had a caſe or box to ſhelter him from the weather; but at his utmoſt peril, he was not to ſleep while he was upon duty. Theſe alarum-bells are mentioned in ſeveral other places of Shakſpeare.

† *Hurly* is noiſe, derived from the French *hurler*, to howl.

‡ That is, 'You who are happy in your humble ſituations, lay down your heads

In this fine ſpeech, how beautifully has Shakſpeare contraſted the ſweets of a ſound ſleep with the horrors of a reſtleſs night! How poetically has he compared the diſturbing anxieties of opulence and power with the lulling influence of indigence and labour! This compariſon, indeed, has been made in the earlieſt times: 'The ſleep of the labouring man,' ſays Solomon, 'is ſweet, whether he eat little or much; but the abundance of the rich will not ſuffer him to ſleep *.

Knowledge of Futurity.

King Henry. O heaven, that one might
read the book of fate;
And ſee the revolution of the times;
Make mountains level, and the continent
(Weary of ſolid firmneſs) melt itſelf
Into the ſea! and, other times, to ſee
The beachy girdle of the ocean
Too wide for Neptune's hips; how chances mock,
And changes fill the cup of alteration
With divers liquors! O, if this were ſeen,
The happieſt youth, viewing his progreſs through,
What perils paſt, what croſſes to enſue †,
Would ſhut the book, and ſit him down and die.
'Tis not ten years gone.
Since Richard and Northumberland, great friends,
Did feaſt together, and, in two years after,
Were they at war. It is but eight years ſince
This Percy was the man neareſt my ſoul;
Who like a brother toil'd in my affairs,
And laid his love and life under my foot;
Yea, for my ſake, even to the eyes of Richard,
Gave him defiance. But which of you were by,
When Richard, with his eye brimful of tears,
Then check'd and rated by Northumberland,
Did ſpeak theſe words, now prov'd a prophecy?
'Northumberland, thou ladder, by the which
'My couſin Bolingbroke aſcends my throne;'—
Tho' then, Heaven knows, I had no ſuch intent;
But that neceſſity ſo bow'd the ſtate,
That I and greatneſs were compell'd to kiſs:
'The time ſhall come,' thus did he follow it,
'The time will come, that foul ſin, gathering head,
'Shall break into corruption;' ſo went on;
Foretelling this ſame time's condition,
And the diviſion of our amity.

In this ſpeech is an excellent leſſon againſt curioſity in reſpect to future events, agreeably to the maxim, 'Quid ſit futurum cras, fuge quærere.' All the knowledge that is neceſſary to true wiſdom lies open before us; the contingencies of events only, of little import, upon the whole of our exiſtence, being veiled from our ſight. Indeed, were we capable of foreſeeing effects in their cauſes, and admitted to look through the teleſcope of time, it would more frequently make us unhappy before our ſufferings; would render the future and precarious evil preſent and certain; and dull the ſenſe of anticipated good, by giving us enjoyment before poſſeſſion. Hope, the enhancer of expected bliſs, would be loſt in aſſurance, and that dear cordial of deſpair be ſtruck off from the *materia medica* of affliction.

Experience.

Warwick. There is a hiſtory in all
men's lives,
Figuring the nature of the times deceas'd:
The which obſerv'd, a man may propheſy,

to reſt! The head that wears a crown lies too uneaſy to expect ſuch a bleſſing.'—Had not Shakſpeare thought it neceſſary to ſubject himſelf to the tyranny of rhyme, he would probably have ſaid, 'Then, happy low! *ſleep on.*'

* Eccleſ. v. 12.

† Dr. Johnſon obſerves, that there is ſome difficulty in this line, becauſe it ſeems to make paſt perils equally terrible with enſuing croſſes. But the happy youth who is to foreſee the future progreſs of his life, cannot be ſuppoſed, at that time of his happineſs, to have gone through many perils. Both the perils and the croſſes that the king alludes to, were yet to come; and what the youth is to foreſee is, the many croſſes he would have to contend with, even after he has paſſed through many perils.

MASON.

With a near aim, of the main chance of things
As yet not come to life; which in their ſeeds,
And weak beginnings, lie entreaſured.
Such things become the hatch and brood of time;
And, by the neceſſary form of this *,
King Richard might create a perfect gueſs,
That great Northumberland, then falſe to him,
Would, of that ſeed, grow to a greater falſeneſs;
Which ſhould not find a ground to root upon
Unleſs on you.

This reply of Warwick to king Henry is very juſt. It inculcates, that, in many caſes, an ignorance of the future may be often ſupplied by thoſe who have made proper obſervations on paſt experience, and are capable of forming judgments upon character.

Military Eccleſiaſtic.

Archbiſhop of York. Say on, my lord of Weſtmorland, in peace,
What doth concern your coming?
Weſtmorland. Then, my lord,
Unto your grace do I in chief addreſs
The ſubſtance of my ſpeech. If that rebellion
Came like itſelf, in baſe and abject routs,
Led on by bloody youth †, guarded with rage ‡,
And countenanced by boys and beggary;
I ſay, if damn'd commotion ſo appear'd,
In his true, native, and moſt proper ſhape,
You, reverend father, and theſe noble lords,
Had not been here, to dreſs the ugly form
Of baſe and bloody inſurrection
With your fair honours. You, lord archbiſhop,
Whoſe ſee is by a civil peace maintain'd;
Whoſe beard the ſilver hand of peace hath touch'd;
Whoſe learning and good letters peace hath tutor'd;
Whoſe white inveſtments figure innocence ‖,
The dove and very bleſſed ſpirit of peace;
Wherefore do you ſo ill tranſlate yourſelf,
Out of the ſpeech of peace, that bears ſuch grace,
Into the harſh and boiſt'rous tongue of war?

In his reply to this ſpeech, the archbiſhop, in his military array, keeps up the gravity and ſeeming ſanctity of his character, and wears the mitre over his helmet! He is not like Hotſpur, or a valiant rebel, full of noble anger and fierce defiance: he ſpeaks like a cool politician to his friends, and like a deep deſigning hypocrite to his enemies; pretending that he acts only as a phyſician to the ſtate.—In the next ſcene, at the interview agreed upon with the royal commanders, prince John thus expoſtulates with him:

My lord of York, it better ſhew'd with you,
When that your flock, aſſembled by the bell,
Encircled you, to hear with reverence
Your expoſition on the holy text;
Than now to ſee you here an iron man §,
Cheering a rout of rebels with your drum,
Turning the word to ſword, and life to death.
That man, that ſits within a monarch's heart,
And ripens in the ſunſhine of his favour,
Would he abuſe the countenance of the king,
Alack, what miſchiefs might he ſet abroach,
In ſhadow of ſuch greatneſs! With you, lord biſhop,
It is even ſo. Who hath not heard it ſpoken,
How deep you were within the books of God?

* For *this* Dr. Johnſon would read *things*; as the word *this*, he obſerves, has no very evident antecedent.

† *Bloody youth* is ſanguine youth, or youth full of blood, and of thoſe paſſions which blood is ſuppoſed to incite or nouriſh.

‡ *Guarded* is an expreſſion taken from dreſs: it means the ſame as *faced, turned up.*

‖ Formerly, biſhops wore white, even when they travelled. *Hody's Hiſtory of Convocations, page* 141. By comparing this paſſage with another in Dr. Grey's notes, page 91, we learn, that the white inveſtment meant the epiſcopal rochet.

§ Hollinſhed ſays of the archbiſhop, that 'coming foorth amongſt them, *clad in armour*, he incouraged them foorth to take the enterpriſe in hand.

To us, the ſpeaker in his parliament;
To us, the imagin'd voice of God himſelf;
The very opener, and intelligencer,
Between the grace, the ſanctities of heaven,
And our dull workings. O, who ſhall believe,
But you miſuſe the reverence of your place;
Employ the countenance and grace of heaven,
As a falſe favourite doth his prince's name,
In deeds diſhonourable? You have taken up*,
Under the counterfeited zeal of God,
The ſubjects of his ſubſtitute, my father;
And, both againſt the peace of heaven and him,
Have here upſwarm'd them.

It may be obſerved, that Shakſpeare has the talents of an orator as much as of a poet; and it will be allowed, perhaps, that the ſpeeches of Weſtmorland and prince John are as proper on this occaſion, and the particular circumſtances are as happily touched, as they could have been by the moſt judicious. Nor can the indecency of a prelate's appearing in arms, and the abuſe of an authority derived from the ſacred function, be more ſtrongly arraigned than in theſe two admirable ſpeeches.

So little, indeed, was the true ſpirit of Chriſtianity underſtood in thoſe dark ages, that military eccleſiaſtics were not uncommon, either in England, or on the continent. In the years 885 and 886, Paris was beſieged by the Normans and the Danes. Goſſin, biſhop of Paris, was one of its gallant defenders, and literally died of fatigue, in going from poſt to poſt, armed at all points, that he might animate the beſieged. A valiant monk ſlew many Normans with a ſpit as they aſcended the walls; and as he flung the bodies down, he cried, 'Take them to the kitchen: they are ready for roaſting.'—In 885, the clergy of England had from Ethelwulph a *licence* to avoid all military duty; but theſe on the continent had their ſhare of fighting. When Otho the ſecond was beaten in 982 by the Greeks and Saracens in Apulia, his army was chiefly officered by prieſts; and biſhops and deans ſtrewed the field of battle with their bodies.—In 1195, in a battle between Richard king of England and Philip king of France, the biſhop of Beauvais was taken. The pope reclaimed him of the Engliſh monarch as his ſon: 'See,' ſaid Richard, ſending the prelate's armour to his holineſs, 'See whether this be thy ſon's coat?' It was the ſame conſiſtent dignitary, who, afterward, at the battle of Bovines, maſhed the ſkulls of the foe with an enormous iron mace; a weapon he had devoutly adopted, ever ſince he had been admoniſhed by the pope, 'not to ſpill the blood of his fellow-creatures.'—In 1310, Anthony Beak, biſhop of Durham, led the van of the firſt Edward's army gallantly againſt the Scots, and dared even to make a harſh retort to a reproof from that ſtern monarch. At Rome, he alone oppoſed a corps of ruffians that had entered his houſe. He loved military parade, and had knights and ſoldiers always about him.

Motives of Attachment.

Falſtaff to Prince John. I would you had but the wit; 'twere better than your dukedom. Good faith, this ſame young ſober-blooded boy doth not love; nor a man cannot make him laugh; but that's no marvel, he drinks no wine.

Falſtaff ſpeaks here like a veteran in life. The young prince did not love him; and he deſpaired to gain his affection, becauſe he could not make him laugh. 'Men,' ſays Dr. Johnſon, 'only become friends by community of pleaſures. He who cannot be ſoftened into gaiety, cannot eaſily be melted into kindneſs.'

Paternal Anxiety.

King Henry. Nothing but well to thee, Thomas of Clarence.
How chance, thou art not with the prince thy brother?
He loves thee, and thou doſt neglect him, Thomas;

* To *take up* is to levy, to raiſe in arms.

Thou hast a better place in his affection
Than all thy brothers: cherish it, my boy;
And noble offices thou may'st effect
Of mediation, after I am dead,
Between his greatness and thy other brethren:
Therefore omit him not; blunt not his love;
Nor lose the good advantage of his grace,
By seeming cold, or careless of his will.
For he is gracious, if he be observ'd:
He hath a tear for pity, and a hand
Open as day for melting charity:
Yet, notwithstanding, being incens'd, he's flint;
As humorous as winter, and as sudden
As flaws congealed in the spring of day.
* * * * *
Most subject is the fattest soil to weeds;
And he, the noble image of my youth,
Is overspread with them. Therefore, my grief
Stretches itself beyond the hour of death:
The blood weeps from my heart, when I do shape,
In forms imaginary, the unguided days,
And rotten times, that you shall look upon
When I am sleeping with my ancestors.
For when his headstrong riot hath no curb,
When rage and hot blood are his counsellors,
When means and lavish manners meet together,
O, with what wings shall his affections * fly
Towards fronting peril and oppos'd decay.

In the above is a striking picture of paternal solicitude, as well as of a degree of paternal discrimination not very common in life. Parents, in general, while they are fond of their children, are apt either to see them without blemish, or, when they are offended with them, to show no indulgence to their failings. King Henry, on the contrary, speaks here impartially of his son, fairly balancing his merits with his faults.

Permanent Attraction of bad Connections.

Warwick. My gracious lord, you look beyond him quite:
The prince but studies his companions,
Like a strange tongue: wherein, to gain the language,
'Tis needful that the most immodest word
Be look'd upon, and learn'd; which once attain'd,
Your highness knows, comes to no further use,
But to be known, and hated. So, like gross terms,
The prince will, in the perfectness of time,
Cast off his followers: and their memory
Shall as a pattern or a measure live,
By which his grace must mete the lives of others;
Turning past evils to advantages.
King Henry. 'Tis seldom, when the bee doth leave her comb
In the dead carrion.

In answer to the melancholy prospect which the king had just formed, Warwick endeavours to make an apology for the prince, in a very pretty and ingenious allusion, in which he observes, with great plausibility, that no one can know the world, or be fit to govern in it, who is not sufficiently acquainted with the base and corrupt part of mankind. But surely history, and an attention to what passes in the world, will impart to an intelligent mind as much knowledge of the base and corrupt part of our species, as is sufficient for the purposes of good government, without resorting to the dangerous expedient of actually associating with them. A legislator, or judge, may know, that there will be murderers, robbers, and swindlers in every state: but to prevent the perpetration of their crimes, or to punish them when committed, it cannot be necessary that he should previously have associated with banditti in their dens, or with sharpers in their haunts. To Warwick's soothing flattery the king replies, with as apt an allusion on his part, to express his diffidence in the hopeful prophecy; intimating too, the great danger of early vicious connexions, since our affection like the honeycomb, when improperly placed at first, will too naturally continue still to attract us, even in spite of our better reason; and he that has once taken pleasure in bad company,

* His passions, his inordinate desires.

will continue to aſſociate with thoſe who have the art of pleaſing him.

Imperfection of human Enjoyments.

King Henry. And wherefore ſhould
theſe good news make me ſick?
Will fortune never come with both hands
full,
But write her fair words ſtill in foulſt
letters?
She either gives a ſtomach and no food;
Such are the poor, in health; or elſe a
feaſt,
And takes away the ſtomach; ſuch are the
rich,
That have abundance, and enjoy it not.

This ſpeech contains a juſt reflection upon the unſatisfactory ſtate of things in this life; and it muſt make a more powerful impreſſion, as delivered from that falſely-envied ſtate, a throne. But, indeed, it has been obſerved, that in the moſt exquiſite of our enjoyments, there is ſomething that never fails to remind us of human imperfection.

Royal Compunction.

King Henry. Heaven knows, my ſon,
By what bypaths and indirect crook'd
ways
I met this crown; and I myſelf know well,
How troubleſome it ſat upon my head:
To thee it ſhall deſcend with better quiet,
Better opinion, better confirmation;
For all the ſoil * of the atchievement goes
With me into the earth. It ſeem'd to me
But as an honour ſnatch'd with boiſt'rous
hand;
And I had many living, to upbraid
My gain of it by their aſſiſtances;
Which daily grew to quarrel, and to blood-
ſhed,
Wounding ſuppoſed † peace: all theſe
bold fears,
Thou ſee'ſt, with peril I have anſwer'd:
For all my reign hath been but as a ſcene
Acting that argument; and now my death
Changes the mode ‡: for what in me was
purchas'd ‖,
Falls upon thee in a more fairer ſort;
So thou the garland wear'ſt ſucceſſively §.
Yet tho' thou ſtand'ſt more ſure than I
could do,
Thou art not firm enough, ſince griefs
are green;
And all my friends, which thou muſt
make thy friends,
Have but their ſtings and teeth newly
ta'en out;
By whoſe fell working I was firſt advanc'd,
And by whoſe power I well might lodge a
fear
To be again diſplaced: which to avoid,
I cut them off; and had a purpoſe now
To lead out many to the Holy Land;
Leſt reſt, and lying ſtill, might make them
look
Too near unto my ſtate. Therefore, my
Harry,
Be it thy courſe, to buſy giddy minds
With foreign quarrels; that action, hence
borne out,
May waſte the memory of the former days.
More would I, but my lungs are waſted
ſo,
That ſtrength of ſpeech is utterly denied
me.
How I came by the crown, O God, for-
give!
And grant it may with thee in true peace
live!

The concluſion of this ſpeech preſents the true picture of a mind divided between heaven and earth: the dying king prays for the proſperity of guilt, while he deprecates its puniſhment. In like manner, the journey to the Holy Land (to which he juſt before alludes, and of which he frequently revives the mention) had two motives, religion and policy: he durſt not wear the ill-gotten crown without expiation; but, in the act of expiation, he contrives to make his wickedneſs ſucceſsful. The whole ſpeech, indeed, exhibits the dying politician; as prudent on the bed of death as at the council-board; his eye, juſt before it cloſed for ever, ſtretching itſelf beyond the hour of diſſolution to the view of thoſe dangers, which, from the temper of the prince of Wales, and the condition of the times, threatened his throne and family. What is worthy of obſervation too, is the remarkable attention of the poet to the cautious and politic temper of Henry,

* *Soil* is ſpot, dirt, turpitude, reproach. † Counterfeited, imagined, not real.
‡ The form or ſtate of things. ‖ At the expence of integrity. § By order of ſucceſſion.

when he makes him, even in ſpeaking to his friends and partiſans, diſſemble ſo far, in relating Richard's prophecy (that Northumberland, who aided him to aſcend the throne, would one day revolt from him) as to add,

Though then, heaven knows, I had no ſuch intent;
But that neceſſity ſo bow'd the ſtate,
That I and greatneſs were compell'd to kiſs.

To his ſucceſſor he expreſſes himſelf very differently when he ſays,

Heav'n knows, my ſon,
By what bypaths, and indirect crook'd ways,
I met this crown.

'Theſe delicacies of conduct,' ſays Mrs. Montague, 'lie hardly within the poet's province, but have their ſource in that great and univerſal capacity which the attentive reader will find to belong to our author beyond any other writer. He alone, perhaps, would have perceived the decorum and fitneſs of making ſo wiſe a man reſerved even with his friends, and truſt a confeſſion of the iniquities by which he obtained the crown only to his ſucceſſor, whoſe intereſt it was not to diſgrace whatever could authorize his attainment of it. Let tragedy-writers who make princes prate with pages, and waiting women of their murders and treaſons, learn for once, of rude and illiterate Shakſpeare, how averſe pride is coolly to confeſs, and prudence to betray, what the fever and deliriums of ambition had prompted to do.'

King Henry's Reproof to Falſtaff.

I know thee not, old man: fall to thy prayers.
How ill white hairs become a fool and jeſter!
I have long dream'd of ſuch a kind of man,
So ſurfeit-ſwell'd, ſo old, and ſo profane;
But, being awake, I do deſpiſe my dream.
Make leſs thy body, hence, and more thy grace;
Leave gormandizing: know, the grave doth gape
For thee thrice wider than for other men.
Reply not to me with a fool-born jeſt;
Preſume not that I am the thing I was;
For heaven doth know, ſo ſhall the world perceive,
That I have turn'd away my former ſelf;
So will I thoſe that kept me company.
When thou doſt hear I am as I have been,
Approach me; and thou ſhalt be as thou waſt,
The tutor and the feeder of my riots:
Till then, I baniſh thee, on pain of death,
As I have done the reſt of my miſleaders;
Not to come near our perſon by ten mile.
For competence of life, I will allow you;
That lack of means enforce you not to evil:
And, as we hear you do reform yourſelves,
We will, according to your ſtrength and qualities,
Give you advancement.

Nature is highly touch'd in this paſſage. The king having ſhaken off his vanities, reproves his old companion for his follies with great ſeverity. He aſſumes the air of a preacher; bids him fall to his prayers, ſeek grace, and leave gormandizing. But that word unluckily preſenting him with a pleaſant idea, he cannot forbear purſuing it. *Know, the grave doth gape for thee thrice wider*, &c. and is juſt falling back into Hal, by a humorous alluſion to Falſtaff's bulk; but he perceives it immediately, and fearing ſir John ſhould take the advantage of it, checks both himſelf and the knight with

Reply not to me with a fool-born jeſt;

and ſo reſumes the thread of his diſcourſe. Thus the poet copies nature with great ſkill, and ſhows us how apt men are to fall back into their old cuſtoms, when the change is not made by degrees, and brought into a habit, but determined on at once, on the motives of humour, intereſt, of reaſon.

'None of Shakſpeare's plays,' ſays Dr. Johnſon, 'are more read than the Firſt and Second Parts of Henry the Fourth. Perhaps no author has ever in two plays afforded ſo much delight. The great events are intereſting, for the fate of kingdoms depends upon them; the ſlight occur-

rences are diverting, and, except one or two, ſufficiently probable; the incidents are multiplied with wonderful fertility of invention, and the characters diverſified with the utmoſt nicety of diſcernment, and the profoundeſt ſkill in the nature of man.

'The prince, who is the hero both of the comic and tragic part, is a young man of great abilities and violent paſſions, whoſe ſentiments are right, though his actions are wrong; whoſe virtues are obſcured by negligence, and whoſe underſtanding is diſſipated by levity. In his idle hours he is rather looſe than wicked; and when the occaſion forces out his latent qualities, he is great without effort, and brave without tumult. The trifler is rouſed into the hero, and the hero again repoſes in the trifler. This character is great, original, and juſt.

'Percy is a rugged ſoldier, choleric, and quarrelſome, and has only the ſoldier's virtues, generoſity and courage.

'But Falſtaff unimitated, unimitable Falſtaff, how ſhall I deſcribe thee? Thou compound of ſenſe and vice; of ſenſe which may be admired, but not eſteemed; of vice which may be deſpiſed, but hardly deteſted. Falſtaff is a character loaded with faults, and with thoſe faults which naturally produce contempt. He is a thief and a glutton, a coward and a boaſter, always ready to cheat the weak, and prey upon the poor; to terrify the timorous, and inſult the defenceleſs. At once obſequious and malignant, he ſatirizes in their abſence thoſe whom he lives by flattering. He is familiar with the prince only as an agent of vice; but of this familiarity he is ſo proud, as not only to be ſupercilious and haughty with common men, but to think his intereſt of importance to the duke of Lancaſter. Yet the man thus corrupt, thus deſpicable, makes himſelf neceſſary to the prince that deſpiſes him, by the moſt pleaſing of all qualities, perpetual gaiety; by an unfailing power of exciting laughter, which is the more freely indulged, as his wit is not of the ſplendid or ambitious kind, but conſiſts in eaſy ſcapes and ſallies of levity, which make ſport, but raiſe no envy. It muſt be obſerved, that he is ſtained with no enormous or ſanguinary crimes, ſo that his licentiouſneſs is not ſo offenſive but that it may be borne for his mirth.

'The moral to be drawn from this repreſentation is, that no man is more dangerous than he that, with a will to corrupt, hath the power to pleaſe; and that neither wit nor honeſty ought to think themſelves ſafe with ſuch a companion, when they ſee Henry ſeduced by Falſtaff.'

Various PARTICULARS *illuſtrative of the preſent* CHARACTER *of the* TURKS.

[From the new Edition of Dr. Ruſſell's Hiſtory of Aleppo, juſt publiſhed, two Vol. 4to.]

WHatever may be the ſpeculative opinions entertained by the Turks, they do not appear, at leaſt in Syria, much ſolicitous about making proſelytes; and ſhow little reſpect for thoſe who abandon the faith in which they were brought up. Indeed the adult converts, are, for the moſt part, wretched Chriſtians or Jews, whom crimes, or the preſſure of ſome urgent diſtreſs, have forced to apoſtacy for refuge. The wife of a convert, and ſuch of the children as have arrived at the years of diſcretion, remain in the houſe, and are permitted to profeſs their primitive religion, without moleſtation: and when a Turk marries a Chriſtian, or Jewiſh woman, ſhe is under no obligation to adopt the faith of her huſband. I have known ſeveral inſtances where the Chriſtian wives of Turks, have not

only continued regularly to attend church, but their prieſts alſo had liberty to viſit them at home.

In converſation on religious ſubjects, the Mahommedans are very apt to charge chriſtianity with idolatry, and a tendency toward polytheiſm; and, though they readily grant many things to be poſſible with God, far above the comprehenſion of finite intelligence, it would be difficult for the moſt ſubtile miſſionary on earth, to give them ſuch a notion of the hypoſtatical union, as would gain their aſſent to its being a ſacred myſtery. They, on ſeveral accounts, hold the Jews in great contempt; but at the ſame time hold the Jewiſh notion of the Supreme Being, to be more pure than that entertained by the Chriſtians.

Notwithſtanding the contemptuous light in which the Turks view all other religions, they permit liberty of conſcience in their dominions, and tolerate the public exerciſe of the Chriſtian and Jewiſh religions, with their reſpective rites and ceremonies. The different monks dreſs in their reſpective habits, go freely about their functions, and, at funeral proceſſions, elevate the croſs, the moment they get without the city gate. It is aſſerted by De la Motray, who had been fourteen years in Turkey, and reſided long at Conſtantinople, that the exerciſe of all religions is no where more free, or leſs diſturbed, than in Turkey. The ſame remark has been made by M. de la Croix.

The haughty ſuperiority, which Mohammedaniſm leads its profeſſors to aſſume over all who are of another religion, is obſerved to increaſe among the people, in proportion to the vicinity of their ſituation to Mecca; thoſe of Conſtantinople and Smyrna, ſhow it in a leſs degree, than thoſe of Aleppo: yet even there, it has of late years ſo much declined, that ſeveral baſhaws and other great men, have conferred public honours on the Franks, and treated them with ſuch diſtinguiſhed regard and familiarity, as would in former times have occaſioned much popular diſcontent. But ſtill a contempt for infidels, of every denomination, actually ſubſiſts, and is not likely to ceaſe among the vulgar; though many of the Ullama, of the merchants who have travelled, and of the inferior claſs of Oſmanli, have in ſome degree got the better of ſuch narrow prejudices.

The recollection of times long paſt, may probably join with ſuperſtition and other cauſes, in keeping up that hereditary rancour, which the Turks are ſaid to bear toward the Franks. The barbarous cruelties exerciſed by both ſides during the Cruſades, recorded in hiſtory, handed down by tradition, and preſerved in the mouldering monuments of ancient hoſtilities which yet remain, may be allowed to have ſome influence. Prejudices of a ſimilar kind ſtill ſubſiſt in ſome inland towns of Europe, which have been long at peace with the Turks, and have no cauſe to complain of freſh provocation. But with reſpect to Syria, the maritime depredations of the Malteſe, Sardinian, and other Chriſtian cruiſers, have a great ſhare in ſupporting the popular averſion to the Franks, than the later wars with Germany and Ruſſia, which have little effect on the Syrian provinces, further than diſtreſſing them by the depredations of their own diſorderly troops, on their march to camp.

An averſion to the Franks, as enemies of the true believers, is certainly not imaginary. I have remarked it not only among perſons unconcerned in commerce, but alſo among the women and children of ſuch as depend on it, who, in my preſence, would unwarily drop expreſſions, which ſufficiently indicated the notion they entertained of the Franks. It is true they always on recollection made an apology, and would check the children, who knew not that they were talking before one of thoſe who had been painted to them in ſuch terrible colours. The commercial Turks, and others dependent on, or connect-

ed with the Europeans, conceal this diſpoſition, and many of them, in the courſe of familiar acquaintance, and interchange of good offices, get the better of it.

In the mean time the Franks at Aleppo, enjoy full protection. They are treated with complaiſance by the grandees, and the number of Turks, whether civilized by commerce, or induced by motives of intereſt to affect civility, is conſiderable.

The common people, when unawed by the preſence of ſuperiors, are apt on the ſlighteſt provocation to grow obſtreperous and abuſive; ſo that one can hardly walk the ſtreet without ſeeing ſome noiſy broil. The contending parties approach each other, they appear every moment ready to come to blows, terms of bitter reproach and execration are reciprocally laviſhed, accompanied with the utmoſt vehemence of voice and geſture. But the fray reſts there, they are leſs diſpoſed to fight than to ſcold; and the ſpectators, who have nothing to apprehend from verbal altercation, have an intereſt to prevent a combat, which ſeldom fails to produce an appeal to the Mahkamy, or the Seraglio, when all who happened to be preſent, are in hazard of being eventually involved, as well as the principals. But, though thus prone to unſeemly fits of rage, the common people ſtill retain ſome portion of ſelf command, and, when their intereſt requires it, can aſſume the ſemblance of moſt perfect reſignation. Their ordinary character is an affected gravity, with ſome ſhare of diſſimulation.

The moral virtues of the Turks, have perhaps been extolled with no leſs partiality by ſome, than injuriouſly depreciated by others. It is more difficult, on many accounts, to form an eſtimate on this ſubject in Turkey, than in Europe. Sir James Porter, whoſe ſituation was more favorable for procuring exact information, than that of moſt tranſient travellers, expreſſes the difficulty he met with, and aſſerts that the accounts of the Turkiſh government and manners, are hitherto very imperfect.

The ſimpler virtues are in no climate reckoned the natural growth either of great cities, or of maritime towns. Yet the Turks, who are ſcarcely known to the Europeans in any other ſituation, have been branded with vices and crimes, as if ſuch were the genuine offſpring of their religious conſtitution, though, under ſimilar circumſtances, thoſe are uniformly found in every part of the globe. Whether political character differs eſſentially in different countries, is beſt known to thoſe who have been practiſed in courts, and are verſed in negociations; but the commercial character of different nations, probably admits of leſs variety. Where ever the principal purſuit of life is that of gain, under the mere reſtraint of prudential honeſty, the human mind is apt to acquire narrow habits, and in a perpetual attention to profit and loſs, can ſeldom find leiſure for the cultivation of its more liberal and exalted faculties.

The Turks, in their commercial dealings, are ſeldom charged with diſhoneſty; but are often taxed, by the Europeans, with conducting all their tranſactions on the narrow principles of ſelf intereſt. In an intercourſe merely commercial, the charge may poſſibly, to a certain degree, be with juſtice applicable to each party. Did the eſtabliſhed cuſtom of the country admit of familiar communication with the Turks, it is probable, that both parties would come, in time, to think of one another in a more liberal manner. Diſtruſt would inſenſibly be baniſhed, and the Turks would, in convivial hours, lay aſide that air of formality and reſerve, which they commonly aſſume when in company with the Franks. But the mutual diſtance unſociably maintained by both, has hitherto prevented this, nor is it ever likely to be otherwiſe.

The native Chriſtians and Jews, are not leſs expert in the management

of trade, than the Aleppeen Turks; and are commonly thought to excel them, in the low arts of cunning, and adulation. It is uſual for many of thoſe of the better claſs, ſometimes with a view to protection, ſometimes to increaſe their perſonal conſequence with their own nation, to court the patronage of ſome powerful Turk; but as this is at firſt obtained, ſo it afterward is preſerved, by a courſe of ſervile attendance, which contributes effectually to heighten the arrogance of the patron whom ſecretly they affect to deſpiſe. Others of leſs ambition, and of lower rank, are taught by prudence, not only to avoid offending, but to endeavour to ingratiate themſelves with their Turkiſh neighbours, who, inconſiderable as they may ſeem, have it occaſionally in their power to render ill offices. Abject fawning, and humility on one part, encourages inſolence on the other; and thus the people, without any imputation on their reſpective religious ſyſtems, may be ſaid to cooperate reciprocally in preventing a melioration of manners.

The Europeans in Turkey, chiefly depend for information, on the Chriſtians or Jews; few taking the trouble of learning the Arabic language, which is not conſidered as neceſſary in tranſacting buſineſs. Theſe interpreters therefore, find it more eaſy to repreſent matters, as may beſt happen to ſuit the purpoſe of the moment. They regard the Turks as wretches deſtined to perdition in the next world, they think it almoſt impious to ſpeak well of devoted infidels, whom they have been taught hereditarily to execrate; and, too often juſtly provoked by inſult or oppreſſion, they draw the Turkiſh character from feelings of inveterate and invincible diſlike. They do not however paint wholly from fancy; the features may be exaggerated, but the picture ſtill bears a reſemblance. An eager thirſt of gain, conſummate art, a readineſs to ſeize every legal advantage, together with a large ſhare of diſſimulation, are among the qualities liberally aſcribed to the Turks. Theſe, it muſt be allowed, when conjoined, preſent a confederacy ſo formidable, that much merit is by implication due to the negotiator who encounters them with ſucceſs: and it is very ſeldom that either the interpreters, or the brokers, confeſs themſelves outwitted in their tranſactions.

Some allowance therefore ſhould be made for the ſecret influence of religious prejudices, as well as for other exaggerations that ſometimes proceed from leſs juſtifiable cauſes; and with this reſtriction, the imputations abovementioned may be admitted as juſt. It may be added, that, in politics, the Turks are aſſiduous, intriguing, venal, and vindictive; in private life, indolent, not averſe, but indifferent to literature; temperate in diet, but addicted to women; and habitually, if not naturally, grave; or, at leaſt, little given to intemperate mirth.

Peculiar circumſtances in the political ſtate of Turkey may be produced by way of explanation, if not apology, of the cenſurable parts of the Turkiſh character. The erection of ſo great a number of petty tyrannies in the kingdom (for ſuch the Baſhawliks may be deemed) and the frequent change of governors, not only expoſe the provinces to vexatious oppreſſion, but ſpread widely a ſpirit of intrigue, together with the whole train of thoſe courtly vices, which, in other countries, are uſually more confined to the capital. The ſervile ſubmiſſion exacted by ſuperiors, and which deſcends in a ſeries from the monarch, to the meaneſt officer of the ſeraglio, propagates diſſimulation, and inſpires, even the cringing ſlave with pride. The page, who with eyes fixed on the ground, receives the commands of his maſter, in the moſt ſubmiſſive ſilence, the moment he retires to his own chamber, ſquats down in ſtate, and is dignified with the title of Aga, by ſome pitiful wretch who ſerves him, and who is daily expoſed to uſage more inſolently imperious, than what

this contemptible Aga meets with himſelf. The corrupt adminiſtration of juſtice, which has long been matter of complaint, too often enables the rich, to evade the laws, or to injure innocence, under the ſanction of legal forms. The increaſe of luxury, which (if their own account may be truſted) has been very rapid in the preſent century, neceſſarily renders them more covetouſly rapacious. Money not only being indiſpenſably neceſſary for the ſupport of expenſive pleaſures, but alſo for the purchaſe of protection and quiet, when in poſſeſſion of wealth. For, among the Oſmanli, thoſe who are ſuſpected of being rich, ſooner or later attract the attention of the Porte, and then have no other means left, than to ſhare their ſpoil with the favourite miniſters, in order to preſerve the remnant of their fortunes for a few years longer.

Theſe are ſome, ſelected from many local circumſtances, which may be conceived to operate either immediately, or remotely, on the national manners: yet not with ſuch irreſiſtable influence, or ſo univerſally, as to preclude all exceptions. There are perhaps few of the European merchants, who have reſided long in Syria, who may not, within the ſmall circle of their acquaintance, be able to recollect ſome reſpectable characters, among the natives; and as to ourſelves juſtice, as well as gratitude call upon us to declare, that we have, in the courſe of a very extended intercourſe, known many of all denominations, whom we had cogent reaſon to regard as perſons of the utmoſt honour, and integrity.

Hoſpitality has always been enumerated among the Eaſtern virtues. It ſtil ſubſiſts in Syria, but prevails moſt in villages and ſmall towns; among the Bidoween Arabs, and the inhabitants of the Caſtravan mountains. The hoſpitable reception that European travellers experience on the road, the officiouſneſs of perſons who offer their houſes, and ſervices, becauſe uſually acknowledged by a ſmall preſent in return, have been unjuſtly ſuſpected of being always mercenary. The traveller would oftener find himſelf at a loſs, was his ſole dependence for lodging, placed in the covetouſneſs of his hoſt, the value of the preſent, or Bakhſheeſh, would hardly induce a perſon at his eaſe, to derange the economy of his family, and incur a certain expenſe, were not the notion ſuperadded of his doing an action in itſelf deemed honorable, and which, if neglected, would ſubject him to the contempt of his fellow villagers.

In the city, where Khanes are provided for the accommodation of travellers, claims on hoſpitality are leſs frequent; but many of the Turkiſh ſtrangers are entertained at private houſes, to which they have recommendation; and theſe accidental connections often give riſe to friendſhips, which deſcend in ſucceſſion to the children of the reſpective families.

Public officers of rank, who come from Conſtantinople, or other places, on buſineſs, are quartered at the houſes of the principal Agas, the town defraying a certain ſhare of the expenſe of their entertainment; but the Aga, to whom the charge is committed, acts as hoſt, and is conſidered as reſponſible for the proper treatment of his gueſt. An engagement with a ſtranger, is ſometimes accepted as an excuſe for not obeying the ſummons of a great man, when no other apology, hardly even that of indiſpoſition, would be admitted.

The relation of hoſt and gueſt is held ſacred, and always mentioned with reverence. A league of mutual amity, founded on former acquaintance, living together in the ſame houſe, but eſpecially on an interchange of hoſpitable offices, is expreſſed by 'having eat bread and ſalt together' Akulna khubz wa milh. Where enmity ſubſiſts, the fiercer Arabs will not eat at the ſame table with their adverſary: ſitting down together betokens reconciliation. The Turks are more polite, and leſs ſincere in this reſpect.

The laws of hoſpitality, give a title

not only to common civility, but to protection. The Arabs and Kurds will risk their lives in defence of their guest, or in revenging an injury offered him within their precincts. In the city, the houses of the grandees are not considered as asylums, in cases where law has been violated, but, in lighter offences, a great man thinks himself under a certain degree of obligation, to exert his interest in behalf of a person in distress, who may have fled to his porch, and claimed the rights of hospitality. A common mode of supplication, whether for pity, or protection, is 'I am in your ground!' Ana fi Ardak.

The Turks are certainly a domestic people. Their chief pleasures are found within the precincts of their own family; and there are few temptations in the way of public diversions, or dissipation, to draw them from home. The parental and filial duties are highly revered. Kindness toward kindred, is manifested by an attention to them when sick, or in adversity, and is extended to their widows, and orphans. Contests respecting poverty, are very often terminated by arbitration: other differences, are accommodated in the same manner, and it is seldom difficult to procure persons willing to undertake the office of arbiter. Gaming is absolutely unknown; drunkenness is a rare vice; and instances of infidelity to the marriage-bed are seldom heard of. Upon the whole, whether it be ascribed to the influence of their political constitution, or to the absence of various temptations, which in Europe often leads to the violation of better laws; there are perhaps few great cities, where many of the private and domestic virtues are, in general, more prevalent than at Aleppo.

Resignation under the calamities common to humanity, as well as under the most unexpected political reverses of fortune, is remarkable to a great degree in the Turks, but is not to be imputed to natural insensibility, nor is it always, though it may be sometimes, merely affected. Their notion of predestination inspires them with fortitude in adversity, and, so far as it conduces to reconcile mankind to the dispensations of divine Providence, it may perhaps be regarded as useful. But, though the speculative principle be universally received, it appears, in the ordinary conduct of life, to have little influence on their determinations. While matters yet remain in doubt, no steps are omitted which prudence may suggest for attaining the end proposed, and no means of defence against impending dangers, are indolently neglected. That every thing is predetermined by Almighty God, though a subject of endless controversy among the learned, is an article of faith seldom contested, in common life: but it is practically called in as an auxiliary, then only when it can be of real service, that is, after the event has irrevocably taken place.

It is with respect to the plague, that the Turks seem, more particularly, to have carried predestination to a dangerous length. Their supineness, in conformity with their creed, in opposition to common experience, is productive of extensive mischief: though it may be doubted whether their neglect of the means of defence against that dreadful calamity, be more influenced by an orthodox tenet, than by an opinion that the distemper is less contagious than it is commonly reputed to be, by the Europeans. It is at least evident from later experience, that in proportion as the sense of apprehension was alarmed, from a conviction of the physical properties of infection, the speculative tenet actually lost ground. Many use certain defensive precautions against the plague, on nearly the same principle that all, when sick, have recourse to medicine. They admit every event to be pre-ordained, but assert that the Almighty who created diseases, created likewise remedies for the cure of them.

Of the Aleppoen Turks, the merchants are almost the only travellers who

ſet out with an intention of returning; and the number of thoſe who go far from home is inconſiderable. Such as travel with a view to ſeek their fortune in the ſervice of the Oſmanli, moſt commonly become citizens of the empire at large, and very often relinquiſh their native place for ever. It may be owing to this, that the Aleppo matrons always reluctantly conſent to let their ſons go far from home. The youth are commonly bred up to the trade or profeſſion of their father; and it is the favourite object of the mother's care to ſecure their ſtay, by getting them early ſettled in matriage.

On POLITENESS *in* CONVERSATION: *An Indian Anecdote.*

THERE is hardly any circumſtance more uncommon, than an elegance and intereſting converſation kept up for any length of time. So many adventitious circumſtances are neceſſary to conſtitute that ſpecies of excellence which enables a man to ſhine in converſation, that no one perſon can expect, with every advantage of talents, to attain them all. But what more particularly tends to leſſen the pleaſures of converſation is, that eagerneſs with which the ſpeakers are apt to interrupt each other, whenever the ſubject is a topic of diſputation.

About a century ago, a number of miſſionaries were ſent to an Indian nation, in order to propagate the goſpel. They were received with becoming reſpect; and the chiefs of the tribe were aſſembled under the ſhade of a hickery tree, to give audience to their reverend inſtructors. Nothing could exceed the gravity and decorum of the whole proceeding on the part of the Indians. Having taken their ſeats, a grave perſonage roſe, and intimated to the miſſionaries, that they were at liberty to explain the doctrine which they wiſhed to inculcate. The miſſionaries, accordingly, delivered their ſentiments one after the other. As each took a reaſonable time to explain himſelf, it was very long after all their minds were diſburthened, and any anſwer could be returned by the Indians. During the whole time, however, they kept a profound ſilence, forbearing to manifeſt any ſigns of impatience, although, on ſuch an intereſting ſubject, the minds of many of them muſt have been teeming with anſwers, interrogations, and objections. When all the miſſionaries had ſucceſſively delivered their ſentiments, the ſavages ſtill maintained a ſolemn ſilence for many minutes, to give each perſon an opportunity of ſupplying any omiſſions, or urging any explanations. When they thought that a reaſonable time had been afforded them, the eldeſt of the Indians aroſe, and began to expatiate their own opinions on the ſubject of religion. The venerable orator had hardly proceeded three ſentences, before he was interrupted by two or three of the miſſionaries ſpeaking together, and denying his poſitions with great vociferation. A glow of indignation animated the Indian's face: after a minute's pauſe, and a look of conſcious ſuperiority, he again addreſſed the Europeans: 'With our religion, ſuch as it is, my friends, we contrive to conduct ourſelves with forbearance and reſpect toward each other, and to exhibit to our teachers themſelves an inſtructive example of patience and juſtice. We liſtened to you with that reſpect and tranquillity which become me who have much to learn; but in your rude haſte to interrupt us in return, you have convinced us, that, with ſuch ignorance of the common civilities of life, you muſt be ill calculated to give us wholeſome counſel in the more weighty concerns of religion.'—Upon this, the aſſembly roſe, and, in ſpite of entreaties, conceſſions, and remonſtrances, marched ſolemnly back to their reſpective habitations.

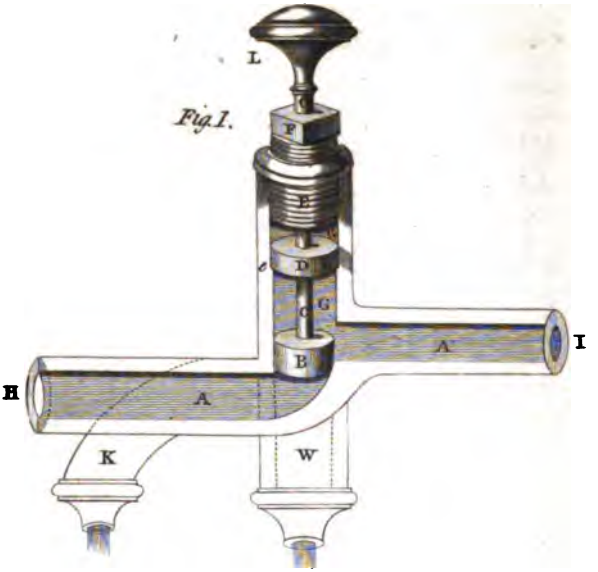

Fig. 1.

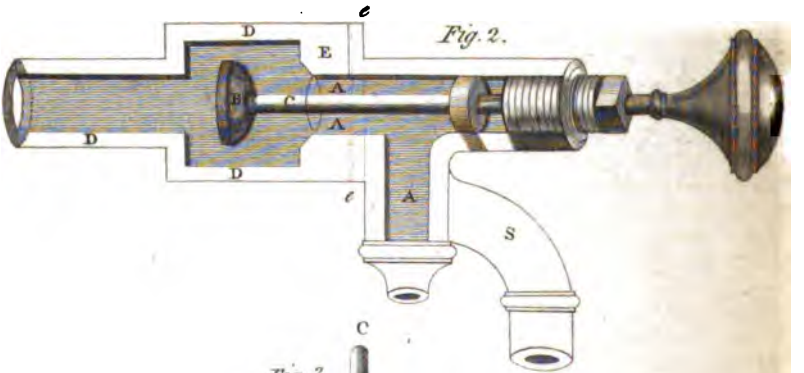

Fig. 2.

Fig. 3.

Bramah's Patent Watercock.

An Account of a WATER-COCK, *on a new Conſtruction, for which a Patent was granted to Mr.* Joſeph Bramah : *Illuſtrated by a Plate.*

MR. Bramah obſerves, that the merits of his invention in no-wiſe depend on any peculiar metal, of which theſe cocks are or may be made, but that their eſſential properties, and ſuperior excellence, entirely depend on the conſtruction and application of a plug, or valve, which opens or ſhuts the paſſage, or water-way: and alſo, more particularly, on the method of opening and ſhutting the plug, or valve; on its being more convenient, and much more durable, than any other means hitherto invented; and farther, on ſuch plug, or valve, being contrived in ſuch manner, as to be capable of opening and ſhutting a much greater water-way, with much leſs metal, than by any other means yet made public; likewiſe on the various ways this plug, or valve, may, with equal propriety and ſucceſs, be applied; and, agreeable to the ſituation in which the cocks may be uſed, the plug or valve may ſhut either with or againſt the gravitating current of the water, or other fluid thereby meant to be retained, without altering or loſing any of its eſſential properties abovementioned. The ſhape and ſize alſo of the cocks may be varied indeterminately, as occaſion may require, without departing, in the leaſt, from that principle on which their ſuperior efficacy and utility chiefly depend.

EXPLANATION of the PLATE.

Figure 1. repreſents the different modes of conſtructing or adapting the cock to the various purpoſes to which it may be applied; and alſo the different ways of opening and ſhutting the water-way thereof, by means of a plug, or valve, on a new conſtruction. Firſt, let it be conſidered, that A A is the water-way of a ſtop-cock, through which the water, or other fluid, always paſſes from H to I, or from I to H. B is the plug, or valve, that ſhuts or opens this water-way: it is turned conical, and its leaſt diameter is equal to the diameter of the water-way A A. To this plug, or valve, B, is joined a ſpindle, or ſlider, C C, with one of its ends exactly in the centre of the greater diameter of the cone, or plug, B, and it is continued, perpendicular to its diametrical ſurface, through the centre of the cavity or cylindrical box G G. By this ſpindle the plug is opened and ſhut, when ſlided up or down by the handle L. The ſpindle, or ſlider, C C, is made round, and perfectly ſmooth and parallel, either by turning, or drawing like wire; and its diameter, in ſmall cocks, muſt be at leaſt equal to half the diameter of the water-way; but in large cocks it will not be neceſſary above one-fourth part of the diameter of the water-way. The different degrees of ſubſtance in the ſpindle will readily be determined, when the ſize of the cock is known, without any proportionate rule. The bottom part of the cavity, or cylindrical box, G, is equal to the diameter of the upper part of the plug B, through which cavity the plug is admitted into the place where it acts; and the upper part of the cavity or box being turned or bored wider than below, forms a rabbet, or ſmall ledge, at *e*, and on this ledge reſts the plate, or bottom, D, which plate exactly fits the cylinder, to prevent its ſhifting out of its place. Through the centre of this plate, or bottom, D, is drilled a hole, exactly the ſize of the ſpindle C. Through this hole the ſpindle paſſes, and is thereby kept in its direction, when ſlided up or down. E F is a plug, or nut, which ſcrews into the cavity, or cylindrical box, G, down to the plate or bottom D, if required. Through this plug, or nut, the ſpindle C C alſo paſſes, by means of a hole drilled exactly in its centre, and correſpondent to the diameter of C C. The top, or external part, of

the plug E is made ſquare at F, for the conveniency of turning with a winch, &c. L is the handle or knob, by which the valve, or plug, is opened and ſhut. The part where the plug, or valve, B, opens and ſhuts the water-way, is directly oppoſite to the cavity, or cylinder, G; ſo that the tool which bores the lower part of the cylinder, being made conical, and the exact ſize of the plug, will, at the ſame time, leave that part completed for the reception of the plug; which is afterward made tight, or water-proof, by grinding with ſand, or ſuch other materials as are commonly uſed in grinding metals. This grinding is performed, when the plug and ſpindle are fixed in their place (as repreſented in the plate) by turning the handle L in a proper manner. The ſpindle C C, and the threads of the ſcrew plug E F, are made water-proof, by introducing into the cavity G, between the bottom of the ſcrew-plug and the plate, or bottom, D, ſome leather, or other elaſtic or flexible material, ſuch as felt, cloth, &c. according to the purpoſe for which the cock is meant to be uſed, namely, for hot or cold liquor. For the former, felt is moſt proper; and for the latter, leather. The manner in which this felt or leather is applied is repreſented in fig. 3, where G is the cavity where the ſpindle C and plug E F are ſituated, and which are to be made water-proof. B is the plate, or bottom, which reſts on the ledge *e*. H is a piece of leather, or felt, that is cut circular, and its diameter greater than the diameter of the box, or cavity, G. In the centre of this leather, or felt, is perforated a hole, barely the ſize of the ſpindle C. Through this hole the top part of the ſpindle paſſes: the leather, or felt, is then preſſed into a conical form, as at H, till its circumference is reduced ſo as to be within the diameter of the cylinder G, and it is then forced down to the bottom, or plate, B, with its extreme edge. There the ſcrew-plug E F is ſcrewed down upon it, and, by its preſſing on the higheſt part of H, cauſes it to force againſt the ſides of the box G, and againſt the ſpindle C, on all ſides, ſo as to prevent any fluid whatſoever from eſcaping from the water-way, though the preſſure thereof be ever ſo great. By the tightening this ſcrew-plug, or nut, the defect of the leather, &c. (occaſioned by wearing) will be made good for many years: it may alſo be renewed, at any time, in a few minutes. Either end of the cock, H or I, (fig. 1.) may be applied toward the ciſtern or fountain-head; but the end, I, will, in moſt caſes, have the preference, as then the gravity of the incumbent fluid will always keep the plug, or valve, B, perfectly cloſe ſhut; whereas, on the other hand, H being thus applied, the fluid would then preſs on the under ſide of the plug, or valve, B, force it up, and let the liquor eſcape. To prevent this there may be applied, at the external end of the ſpindle, ſome force or power, ſuch as ſpring, weight, ſcrew, inclining plane, or other contrivance, ſufficient to overcome the greater preſſure of the fluid thereby meant to be retained. This way of applying the plug, or valve, may, in ſome works, have the advantage; for inſtance, where the end H is fixed into a ciſtern, caſk, &c. in a ſituation expoſed to the froſt, the end I, or that part of the water-way A G I, will remain always without water, ſo that the plug, or valve, B, cannot have its movement ſet faſt by the freezing of that part. But a more effectual method of preventing this complaint is by applying the plug, or valve, in the manner deſcribed in fig. 2. when it is uſed for ciſterns, vats, caſks, &c. expoſed to the froſt. A A A is the water-way; B the plug, or valve, that opens and ſhuts the water-way; and C is the ſpindle, joined to B on the contrary ſide to that deſcribed in fig. 1, and which opens and ſhuts the plug by its *vice verſâ* motion. *e e* is a ſhoulder, before which is a part turned with a ſcrew, at E, which

ſcrew may be ſcrewed into any veſſel of wood, and by having a leather ring, or flanch, between the wood (or ſide of the veſſel) and the ſhoulder *e e*, it will readily be made water-proof, by ſcrewing cloſe the ſhoulder. The plug, or valve B, will then open and ſhut the water-way A A A on the inſide of the ciſtern, or caſk, &c. where the fluid is retained; and as the ſaid water-way will be always left empty, the ſpindle C, or the plug, or valve, B, cannot at any time be ſet faſt by the froſt, without the fluid within the ciſtern, or caſk, ſhould be congealed as long as the cock, which would then prevent its being opened. The noſe, or ſnout, of theſe cocks may be made in any ſhape, according to the different ſituations in which they are fixed, ſuch as K or W, fig. 1. A or S, fig. 2, &c. D D D in fig. 2. is a boſs, or braſs, which may be uſed when the cock is applied to the end of a pipe, or into a lead ciſtern, where it will be required to be ſoldered into the boſs; the cock may be ſcrewed at pleaſure in or out, and the boſs left in its place.

OBSERVATIONS *on the* AMERICAN BUFFALO, *and his Superiority over the* ENGLISH OX, *in certain Properties; alſo, on the principal Mineral Productions already diſcovered in* North-America.

The following intereſting Letter was ſent by George Turner, *Eſq. Judge of the* Weſtern Territory in the United States of America, *to Dr.* A. Fothergill, *and by him communicated to the Secretary of the* Bath and Weſt of England Society.

Philadelphia, May 9, 1794.

DEAR Sir,

YOU have laid me under another, and very particular obligation; you have procured me an honour to which, I am fearful, I had no juſt claim. I eſteem it a mark of your polite and friendly attention, and beg you to accept, in return, my warmeſt acknowledgements. Aſſure, ſir, the Bath and Weſt of England Society how greatly I am flattered by the honours they have done me, in placing my name among the members of a body ſo truly reſpectable. If at any time, and in any manner, I can aſſiſt or promote the laudable views of the ſociety, they may depend on the beſt of my poor endeavours.

I have peruſed, with much ſatisfaction, the rules and premiums of the ſociety. You have wiſely made agriculture the chief object of the inſtitution. I count it among the nobleſt purſuits of man. Having ever myſelf been a friend to agriculture, you will readily conceive the intereſt I take in its improvement.

Perhaps, at a day not far diſtant, America will have the ſatisfaction of ſeeing her buffalo introduced to the attention and convenience of the Engliſh, and other European farmers. This animal might be made the farmer's beſt friend: he is gregarious, docile, alert, and of ſurpriſing ſtrength; his carcaſe affords excellent beef; and the horns, which are jet black and of a ſolid conſiſtence, take a poliſh of wonderful beauty: they can be converted into fabrics of uſe and ornament; ſuch as mugs tumblers, *couteaux de chaſſe*, and knife-handles, &c. In this way we ſometimes apply them; and when ornaments of ſilver, or mother-of-pearl, are employed, the contraſt with the poliſhed black of the horn is agreeably ſtriking.

The American buffalo is, if I miſtake not, the biſon of Buffon. Immenſe herds of this animal roam at large, in Interior America. From Green River to the Miſſiſſippi, the ſhores of the Ohio are lined with them. The hunters are too apt to deſtroy them wantonly: a circum-

ſtance much to be regretted, and not to be prevented. Frequently have I ſeen this fine animal killed; and, excepting the tongue and the tallow, left on the ground, a prey to the tigers, wolves, and eagles. The boſs on the ſhoulders of the buffalo is, as well as the tongue, extremely rich and delicious,—ſuperior to the beſt Engliſh beef. It is uſual to cure the tongues, and tranſport them to New-Orleans; where they are ſure to meet with a good market.

There is a ſingular, an affecting trait in the character of the buffalo, when a calf; and my feelings have ſeverely felt it. Whenever a cow buffalo falls before the murdering lead of the hunters, and happens to have a calf, the helpleſs young one, far from attempting an eſcape, ſtays by its fallen dam, with ſigns expreſſive of ſtrong and active natural affection. The dam thus ſecured, the hunter makes no attempt on the calf, (knowing it to be unneceſſary) but proceeds to cut up the carcaſe: then laying it on his horſe, he returns toward home, followed by the poor calf, thus inſtinctively attending the remains of its dam. I have ſeen a ſingle hunter ride into the town of Cincinnati, between the Miames, followed in this manner, and at the ſame time by three calves, who had loſt their dams by this cruel hunter.

Since I have expreſſed a wiſh to ſee the buffalo domeſticated on the Engliſh farms, I will now mention a fact concerning it, within my own knowledge. A farmer, on the Great Kenhawa, broke a young buffalo to the plough; having yoked it with a ſteer taken from his tame cattle. The buffalo performed to admiration. Enquiring of the man, whether he had any fault to find with the buffalo's performance, he anſwered, there was but one objection to it: the ſtep of the buffalo was too quick for that of the tame ſteer. 'My friend,' ſaid I, 'the fault lies not in the buffalo, but in the ſteer: what you term a fault in the former is really an advantage on its ſide.' Till this moment, the man had laboured under one of thoſe clouds of prejudice but too common among farmers. He had taken the ox of his father's farm, as the unit whence all his calculations were to be made, and his concluſions drawn:—it was his unchangeable ſtandard of excellence, whether applied to the plough or to the draught. No ſooner was my obſervation uttered, than conviction flaſhed on his mind. He acknowledged the ſuperiority of the buffalo.

But there is another property in which the buffalo far ſurpaſſes the ox: his ſtrength. Judging from the extraordinary ſize of his bones, and the depth and formation of his cheſt, I ſhould not think it unreaſonable to aſſign nearly a double portion of ſtrength to this powerful inhabitant of the foreſt. Reclaim him, and you gain a capital quadruped for the draught and for the plough: his activity peculiarly fits him for the latter, in preference to the ox.

If this part of my letter, reſpecting an animal but little underſtood in Europe, and not ſufficiently noticed in America, ſhould appear to you not altogether unintereſting, nor too foreign to the immediate objects of the Bath ſociety, you are at liberty to communicate it, if you pleaſe.

We will now return to your favour before me: the peruſal of which has given me great pleaſure.

You very properly conceive that America abounds in various metals. I believe ſhe has a full proportion. We have multifarious proofs of it.

Native malleable copper is found in ſeveral parts, and ſometimes in blocks of conſiderable magnitude;—witneſs the ſouthern ſhores of Lake Superior. A ſubſtance reſembling block-tin has been diſcovered on the Siota. What this metal is, I cannot yet determine, having never aſſayed it. As it is not mineralized with any other body, but, on the contrary, is pure and malleable, pervading in ramifications the maſs of ſtone that contains it, I con-

ceive it cannot be tin. It may poſſibly be a new metal; or, poſſibly, fine ſilver. Lead is abundant in the country weſt of the mountains; and there is a mine of it in Virginia, worked on an extenſive ſcale, and, I am told, with conſiderable profit. The weſtern territory affords very rich ſpecimens of this mineral. Black lead is common in many parts, without being confined to that or this ſide of the mountains. Hitherto, it has been applied ſolely to the making of crucibles, and to ſome inferior purpoſes. None of a quality ſufficiently tenacious for pencils has yet been diſcovered, or, rather, ſought for. Some ſilver ore has been ſeen, here and there: but there can be little doubt that conſiderable mines of it lie hidden in that enormous chain of mountains which ſeparates the eaſtern and weſtern part of this continent.—Long may they remain buried! and may Americans be taught, by the ſweets of experience, that it is not the digging into the mine, but the careful cultivation of the ſoil, which yields the greateſt quantity of the precious metals! Unhappy Mexico! unhappy Peru! and Spain herſelf not happy!

Beſide the above, we have plenty of iron, ſalt, and coal; and, in ſome places, alum, and ſulphur. The coal, of what is called Duncan's Mine, at Pittſburg, is equal to the beſt I have ſeen in the Engliſh counties of Northumberland and Durham. I am poſſeſſed of ſome curious ſpecimens of this foſſil, in all its ſtages, from the vegetable to the coal ſtate.

With reſpect to the cochineal, it is by no means a ſtranger to the northern continent of America. I have repeatedly ſeen the inſect in Eaſt Florida, Georgia, and South-Carolina; of all which countries it is a native: but in Weſt-Florida only did I ſee the true plant on which it feeds in more ſouthern countries—and that but ſeldom. In Carolina and Georgia, where they have the dwarf opuntia only, I have ſeen the plant white with theſe inſects; ſo numerous were they in a certain ſeaſon of the year. It will be ſome time, however, before cochineal will attract the attention of our planters: their ſtaples, rice, indigo, and tobacco, will forbid it.

I obſerve, with ſingular ſatisfaction, the many diſcoveries and improvements of the preſent generation. This, ſir, is an age of ſcience—an epoch of great events. It will ſtand as ſuch on the future records of hiſtory, when the veil of prejudice ſhall be drawn aſide, and the mirror of truth introduced. By the ſplendour of its ſpirit and reſearches; by the magnitude of revolutions now crimſoning the world with blood; the latter end of the eighteenth century will aſtoniſh and confound ſucceeding ages. I am, &c.

G. TURNER.

Singular INGENUITY *of* NECESSITY; *an Hiſtorical Trait.*

ALTHOUGH the ancient Peruvians were civilized, in compariſon with the other nations of America, they were to be conſidered, with reſpect to Europe, as in a ſtate of great barbarity. Of ſingular ingenuity, however, their hiſtory affords many traits. The great road of the Incas, which extended from north to ſouth upward of 1500 miles, was interſected, in its courſe, by all the torrents which roll from the Andes toward the Weſtern Ocean. The Peruvians could not conſtruct bridges either of ſtone or timber. But Neceſſity, the parent of invention, ſuggeſted a device which ſupplied that defect. They formed cables of great ſtrength, by twiſting together ſome of the pliable oſiers, with which their country abounds. Six of theſe cables they ſtretched acroſs the ſtream parallel to one another, and made them faſt on each ſide. Theſe they firmly bound together by interweaving ſmaller ropes, which being covered with branches of trees, and earth, they paſſed along with tolerable ſecurity.

METEOROLOGICAL JOURNAL, January 1795.

D.	H.	Baro.	T. out	T. in	Hyg.	C.	Wind.	Weather, &c.
1	8	30,11	24,5	35	58,5	f	N 1	thick fog. more bright: foggy
	2	30,11	30,5	39	57	f	N 0	thick fog
2	8	30,18	24	35	60	f	N c	thick fog. very foggy
	2	30,20	26	37	65	f	N c	very foggy
3	8	30,27	17	34	59	f	N 0	.
	2	30.33	22	35	59	f	N 0	.
4	8	30,35	18	33	59	f	N c	very foggy: more bright and few clouds
	2	30,36	24	33,5	58,5	f	N 0	very foggy. less at night
5	8	30,24	24	34	59	f	NW 1	. few clouds but foggy
	2	30,22	33	36	58,5	f	W 1	. fine night
6	8	30,34	30	36	58	f	WSW 1	chiefly thick fog
	2	30,36	35	39	63,5	f	SW 1	chiefly thick fog
7	8	30,31	35	39,5	58	f	NNW 1	. thick upward
	2	30,25	36	41,5	68	h	N 1	. little wet at times
8	8	30,09	35	40	65	f	NE 1	. few clouds but hazy: thick upward
	2	29,98	37,5	41,5	62	h	NE 1	. cloudy eve
9	8	30,00	32	40	60	f	WNW 1	: little rain
	2	30,03	37	42	64	h	NW 1	. drizzling at times. fine night
10	8	30,34	31	38	64,5	f	N 1	. few clouds but hazy
	2	30,40	35	38	61	2	N 1	hazy
11	8	30,40	25	38,5	62	f	N 1	. less fog and few clouds
	2	30,38	32	41	58	3	NW 1	foggy. fine night
12	8	30,36	23,5	39	57	f	NW 1	
	2	30,31	30,5	41	57,5	f	WNW 1	
13	8	30,23	33,5	40	61,5	f	SW 1	. fine and wind E
	2	30,18	34,5	40,5	61	2	E 1	hazy
14	8	30,14	25	35	59	4	NE 1	. fine at times
	2	30,15	30	37	57	4	E 2	. little snow at times: fine
15	8	30,05	30,5	37,5	61	4	NE 2	. snow at times but chiefly fine
	2	30.11	28,5	37	57	5	NE 3	snow at times. clear night
16	8	29,87	24,5	35	56	3	NE 2	. chiefly cloudy and snow at times
	2	29,74	30	35,5	57	5	NE 2	. snowy eve and more wind
17	8	29,70	25,5	34,5	58,5	5	ENE 1	
	2	29,72	28	35,5	60	5	NNE 1	little snow. gentle snow eve and night
18	8	29,62	28,5	35	60	5	NNE 1	gentle snow. less cloudy: foggy
	2	29,55	30,5	37,5	58,5	4	NNE 1	. little snow at times. clear night
19	8	29,61	24	33	62	f	NNE 1	. few clouds but hazy
	2	29,67	30,5	36	57	3	NNE 1	hazy. clear night: little snow
20	8	29,66	19,5	32,5	57	4	NNE 1	. few clouds but hazy
N	2	29,66	25,5	35	58	3	N 2	. cloudy and gentle snow at times
21	8	29,75	21,5	31,5	59	4	N 1	. little snow at times
	2	29,80	26	35	59	3	N 1	. little snow. clear night
22	8	29,81	21	31,5	59	2	N 1	: little snow
	2	29,76	26	34,5	58	3	N 1	little snow. clear night
23	8	29,63	19	30	59	3	N 1	. little snow
	2	29,65	22,5	31,5	57	2	N 1	. cloudy night: little snow
24	8	29,90	23	31,5	59,5	f	NNW 1	. little snow at times
	2	29,98	27	33	58	3	NNW 1	foggy. cloudless night and low fog
25	8	30,01	12	27	57	f	NNW 0	. thick fog but the sun visible
	2	29,99	21,5	31,5	57	f	NNW 0	thin clouds. wind at night and fine
26	8	29,70	20,5	29	60	5	E 1	gentle snow: small rain
	2	29,45	25	31	63,5	5	E 1	little rain. rainy night: wind and rain
27	8	29,14	45	36	91	5	SW 2	
	2	29,12	46	38	89	5	SSW 2	. fine. rainy night
28	8	29,14	40	42	82	5	NW 1	rain. snow and wind N
	2	29,42	36	42,5	67	5	N 2	little snow. fine
29	8	30,01	36,5	41,5	54	2	N 1	hazy
	2	29,97	30	39	69	2	N 1	hazy. thick upward at night
30	8	30,09	25	35	73	f	N 0	thick fog: less fog
	2	30,13	27,5	36,5	72,5	f	N 0	
31	8	30,07	23	35	76,5	f	NE 1	. less fog. cloudy
	2	30,01	33	37	65,5	4	E 1	hazy. thin clouds and foggy

REMARKS *on the State of the* AIR, VEGETATION, *&c.* January 1795.

*** Thoſe on Vegetation from a Village near London.

1. THE ground thinly covered with ſnow that fell a week ago, and froſt (which commenced on the 15th of laſt month) increaſes in ſeverity. —6. Very foggy for a week paſt, and ſome parts of this day ſo dark, that many people were frequently obliged to burn lights.—13. Foggy mornings yet continue, and trees, &c. covered with remarkably thick hyem.—25. The thermometer uſed in the preceding Journal was at 12, and on being placed three ſtories higher ſoon fell to 9; others in different ſituations in town were at 7, 6, and 4; at South Lambeth 4 below 0, and at Clapham 6 below 0: but at Maidſton (thirty miles SE) a thermometer laid on the ſnow was 14 below 0, and another at five feet above the ſurface 10 below 0; which is ſuppoſed to be the greateſt degree of atmoſpherical cold ever obſerved in England.—26. Snow and ſleet changed to rain at noon, and a thaw commenced after a froſt of 42 days.—27. The hygrometer at 91 till near noon, indicating a degree of moiſture in the air only 9 ſhort of water itſelf. Snow all gone, and beans and peas, ſet in autumn for early crops, look healthy.—30. Beans deſtroyed by the froſt, which returned on the 28th at night, but peas not injured.

Rain this month 56 hundredths of an inch.

OBSERVATIONS *on the* DISEASES *in* January 1795.

THE acceſſion of cold at the latter end of the laſt month, put a period to the fever which prevailed in that and the preceding one; this there was every reaſon to expect would be the caſe: other diſeaſes were however produced by it which proved ſtill more fatal; the objects of them were principally the old and infirm; but aſthmatic perſons were great ſufferers if they expoſed themſelves ever ſo little to cold, for peripneumonic ſymptoms came on which ſpeedily proved fatal; indeed where there was any kind of affection of the lungs, the ſame ſymptoms occurred from ſimilar cauſes. At the end of the month a catarrhal affection became univerſal; but this will more properly be noticed under the diſeaſes of the next month. Croup again was occaſionally met with; its objects were children where there was reaſon to apprehend ſome ſcrofulous taint, and it proved, as uſual, generally fatal. Acute rheumatiſm was likewiſe common; it was in general of long duration, and was not eaſily relieved. Smallpox was ſcarcely met with.

PROCEEDINGS *of the Fifth* SESSION *of the Seventeenth Parliament of* Great Britain; *continued from Page* 69.

NOTHING of moment occurred in either houſe, but notices of ſubjects for future diſcuſſion, till Monday Jan. 5, when Mr. Sheridan (purſuant to his declaration on the firſt day of the ſeſſion, Dec. 30) made a motion to repeal the act for ſuſpending the Habeas Corpus act. The arguments on each ſide were little more than a recapitulation of what had been urged when the ſubject was firſt brought forward (*See page* 60). An expreſſion, however, which had that day inadvertently dropped from Mr. Windham, intimating, that he conſidered the perſons who had been diſcharged on the late State-trials but as *acquitted felons*, underwent the moſt ſevere animadverſion. Mr. Sheridan's motion was rejected by 185 to 41.

The next day, in the houſe of lords, earl Stanhope moved a reſolution; 'That this country ought not to, nor will it interfere with the internal government of France, and that it be expedient explicit-

ly to declare the ſame.' His lordſhip ſupported his motion by a very ſtrong, and (we hope) exaggerated account of the formidable power and reſources of the French, and by all the topics which had been already urged on the ſame ſide, and which were now, as well as then, ably combated by the noble friends of adminiſtration. The marquis of Lanſdown and the duke of Bedford agreed to the truth of earl Stanhope's repreſentations, but did not approve of his motion, which they conſidered as too abſtract, general and indefinite, and therefore wiſhed him to withdraw it. But his lordſhip perſiſted in taking the ſenſe of the houſe, and, on a diviſion, there appeared,

Againſt the motion	-	61
For it *(Himſelf)*	-	1

In the houſe of commons, on Wedneſday Jan. 7, in a committee of ſupply, it being moved, that 100,000 ſeamen, including 15,000 marines, be employed for the ſervice of the year 1795, Mr. M. Robinſon called the attention of the houſe to the ſuperior conſtruction of the French ſhips when compared to ours, which enable them, on every occaſion, to outſail us.

Capt. Berkeley allowed the truth of this remark as far as reſpected ſingle ſhips; but that, as a fleet, he thought the Engliſh ſhips equal to the French in point of ſailing. The French ſhips might be ſuperior in point of conſtruction, but the materials of ours were better, and they were more ſtrongly put together.

Admiral Gardner did not agree with captain Berkeley, with reſpect to the ſailing of the French ſhips, which he (the admiral) thought decidedly ſuperior to ours.

This ſuperiority of the French ſhips was to be attributed to the premiums which they give for models of ſhips, and he wiſhed much to ſee that practice introduced into this country. But there had been conſiderable improvement in the building of ſhips in this country ſince he firſt entered the navy near forty years ago, and the improvement aroſe from our building ſhips upon the model of thoſe we took from the enemy.

Mr. Lambton ſaid, that he entertained the moſt alarming fears for the ſafety of this country, when he contemplated the well-planned, vigorous, and powerful preparations of the enemy. He ſtated that there was a model made at Breſt for a ſhip of the line, the moſt exquiſite in all its parts for their reſpective purpoſes; the parts were numbered, and models ſent to all the provinces; that all over the country they are employed in making the like; and from their ingenious and patriotic exertions, he heard that there would be 60 ſhips of the line finiſhed on that plan in two months; to which there could be but this objection, that the wood was green, and poſſibly not ſufficiently ſeaſoned. This matter conſidered in its full light as to danger to this country, made him wiſh, that inſtead of the preſent vote for 100,000 ſeamen, the number had been increaſed to 150,000.

In the courſe of this converſation, ſome reflections were thrown out againſt lord Chatham, who was charged with having, while at the head of the admiralty, been guilty of great negligence in the protection of our trade. He was ably defended by Mr. Dundas and admiral Gardner. The latter ſaid, that there had no leſs than 108 convoys ſailed from the 1ſt of January 1793, to the 1ſt of January 1794, and that there were employed in thoſe convoys 140 of his majeſty's ſhips of war.

Sir John Sinclair hoped the preſent diſcuſſion would be attended with good conſequences, and increaſe the vigour of our exertions.

The reſolution was then put and agreed to.

On Wedneſday Jan. 21, in a committee of ſupply, Mr. Windham moved that 222,656 men, including fencibles, &c. be employed for the ſervice of the year 1795, the expences of which would be 6,652,745l. This would make an increaſe of the land forces, beyond the laſt year, 73,029 men; the increaſed expences of which would be 2,175,489l.

General Tarleton expatiated on the misfortunes and miſconduct which had diſgraced the laſt campaign: inſtancing, in particular, the inſufficiency of the force which miniſters had ſent for the reduction of the French Weſt India iſlands; and the expedition againſt Dunkirk, ill-planned, ill-timed, ill-executed, and, even if it had ſucceeded, unproductive of any permanent advantage: from all which he inferred the little proſpect we had of a more favourable turn of affairs, while the ſame ſyſtem and the ſame meaſures were purſued.

Mr. Huſſey ſaid, that if we were reduced to our laſt ſtake (which God forbid) that laſt ſtake ſhould be employed in the moſt rational manner. But he did not conceive that this could be done by the immenſe addition to our land forces, to the neceſſary diſadvantage of our naval

ſtrength, which we ought to employ every means to increaſe. He would therefore move, that before the army eſtimates were finally determined, the chairman report progreſs, and aſk leave to ſit again, that the ſtate of the navy might be conſidered.

The chancellor of the exchequer ſtrenuouſly denied that we were reduced to any thing like our *laſt ſtake*; and he contended, that in point of the reſources, commerce, and revenue, the great ſinews of war, this country ſcarce ever ſtood in a more flouriſhing condition. There was no man more eagerly diſpoſed than he was to put our navy on the moſt reſpectable footing, but that did not exclude our attention to the augmentation of our army, which in every war that we had carried on with ſucceſs, went hand in hand with the increaſe of our naval force, and, by enabling us to make powerful diverſions on the continent, contributed to the general ſucceſs. There was a tendency he owned in the preſent preſſure of accumulated calamities, to bring the country to its laſt ſtake: but it would accelerate its fall not to have recourſe to every vigorous exertion to make the beſt poſſible ſtand againſt the common enemy of Europe, which he ſtill confided would prove ſucceſsful, from the truſt he repoſed in the wiſdom of the houſe, and the ſpirit of the nation at large.

Mr. Fox took a review of the various diſaſters of the war, and inſiſted, that to the want of wiſdom and ability in adminiſtration, were the whole to be attributed: Our army was left in the moſt deſperate ſituation, to protect Holland, even after we knew that terms of peace had been offered by that country to the French republic, which every power of Europe, and even our own allies, have virtually acknowledged.—We had long conceived hopes that the various changes in the temper of their ruling power might ultimately open to us ſome probability of ſucceſs; but when their ſyſtem of cruelty and terror could not infeeble their efforts, or diſunite the great maſs of the nation, can we expect to obtain the object we have ſo ardently purſued, when their counſels and meaſures have put on a more conciliating aſpect, and better calculated than ever to produce new vigour. The idea muſt appear abſurd to the dulleſt capacity.

The chancellor of the exchequer inſiſted, that amid all that diſgrace in which Mr. Fox attempted to involve the military operations of this country, he would ever contend that its hiſtory could not preſent a period more honourable to its arms. That ſome of our allies had not acted to the extent, or in the manner that we had reaſon to expect, he never attempted to conceal. As to one in particular (Holland); it may appear ungenerous, at the preſent moment, to ſay any thing in the way of reproaches; but there was no denying that it was a ſacrifice to its own inertneſs, and it became the victim of vague expectations of the tender mercies of an enemy which Mr. Fox delighted to extol.

Mr. Fox replied at ſome length, and after a few obſervations from Mr. M. Robinſon, the amendment of Mr. Huſſey was negatived, and the original queſtion, as well as the other reſolutions, carried without a diviſion.

On Thurſday Jan. 22, Mr Curwen preſented a petition from Carliſle, praying that the houſe would 'in its wiſdom, take every poſſible ſtep to put a ſpeedy termination to the preſent ruinous and diſaſtrous war, the avowed purpoſes of which could never be accompliſhed.' Lord Morpeth produced a proteſt againſt the proceeding of this meeting, ſigned, he ſaid, by not leſs than 1,200 perſons, many of them of great property and reſpectability. He did not deny but that peace was very generally deſired, and the neceſſity of it widely felt; but a difference of opinion aroſe concerning the means by which it could be procured, and the time when it could be attempted. Any attempt, at the preſent moment, he regarded as utterly unwiſe, unſafe, and ineffectual. As to the proteſt, no improper influence was exerted to procure it, as was frequently done: it expreſſed the genuine ſentiments of independent and enlightened men, who wiſhed for a peace as ſincerely as others, but did not think a peace, ſuch as this country could in honour accept, attainable at this inſtant.

Mr. Curwen declared, that the petition he had the honour to preſent was no manufactured petition; that it came from men who had no political predilections to warp them. If there were gentlemen who imagined that they had ſolid objections to the object of the petition, they ſhould have have ſupported them in the face of the public meeting, where, however, there appeared but four diſſentient voices.

Mr. Fox ſaid, that he could not perceive any eſſential difference of opinion between the proteſtors and petitioners, as the only one that appeared, related not to the propriety of the meaſure, but to the

ſame of adopting it. The reſult of the two papers went to prove, that there exiſted a perfect unanimity concerning the neceſſity of a peace.

The chancellor of the exchequer wiſhed to obtain the ſame end that was the object of the petitioners, but could not concur with them in the meaſures they were inclined to adopt. The petitioners deſired immediate ſteps to be taken to procure it. The proteſtors breathed after peace alſo, but feared it would be retarded. His majeſty's moſt gracious ſpeech recommended a vigorous proſecution of the war as the only means of obtaining a ſecure and permanent peace, the only peace that could be deſirable, and the ſenſe of the houſe accorded with his majeſty's intention and advice. But the petition had been drawn up and promoted ſince that intention had been declared. He could not, therefore, concur in any petition that did not argue and evince a confidence in the wiſdom of parliament. So far at leaſt the object of the proteſt went, and ſo far it met with his approbation, as he was inclined to promote the general end as ſoon as it could be obtained with any practicable ſecurity.

The petition was ordered to lie on the table.

The report on the army eſtimates being brought up, and ordered to be read a ſecond time, Mr. Fox ſaid, he thought it his duty to ſtate, that though he had put a number of queſtions relative to the exertions that were promiſed to be made to ſtrengthen our navy, he had not been able to obtain a ſatisfactory anſwer. He would again expreſs his deſire to be informed, if we were ſtill to perſiſt in that mode of recruiting the army, which he contended muſt prove injurious to the manning of our navy. If ever the military eſtabliſhment of this country was to be ſacrificed to the naval department, it was in the preſent alarming criſis; and he would again repeat his ſerious wiſh, that ſhips of war be immediately conſtructed in every port and creek of the kingdom, capable of admitting them.

Mr. Pitt inſiſted, that in no war was there more attention paid to our naval force than during the preſent, and that never, at any other period, had it received greater acceſſions of ſtrength. He alſo contended, that ſound policy required that our military force ſhould be kept on the beſt poſſible footing, at the ſame time that we increaſed our naval power; that both ſhould act in concert, and go hand in hand; and that to their mutual exertions we were indebted for the moſt ſignal ſucceſſes that ever crowned our arms. He reprobated the invidious diſtinction that was attempted to be made between the army and navy officers. It reminded him of an exploded error, which prompted us to diſtinguiſh between the landed and commercial intereſt of the country; a diſtinction he hoped which was for ever aboliſhed; for he was ſure that both intereſts were too intimately blended, not to excite thoſe who held them dear, to make their joint exertions in ſupport of each. At ſome future time, he would ſhew he was as zealous and determined as any man, to give to our naval force every poſſible addition it might require, and which the means of the country were abundantly able to afford.

Mr. Fox again inſiſted, that where the two ſervices interfered, preference ſhould be given to the wants of the navy.

Mr. Sheridan rejoiced at the perfect agreement in the houſe with reſpect to the neceſſity of giving every poſſible addition of ſtrength to our navy, to which alone we could look for defence and ſecurity. He alſo thought it neceſſary that encouragement ſhould be held out to marines, who from certain regulations of the admiralty, never could become good ſailors, as they were never permitted to go aloft, and were thus literally diſqualified from being ever expert ſeamen. He adverted alſo to the ſhameful ſtate in which the tranſports deſtined for the Weſt Indies were permitted to linger—it proceeded from nothing but a ſcandalous, cruel, and criminal neglect. He would certainly move an enquiry into that buſineſs, alſo into the abominable mode of recruiting, which went under the name of *crimping*; and the preſent ſtate of the corps of marines.

After a variety of obſervations and explanations, in the courſe of which Mr. Dundas defended adminiſtration, not only with reſpect to the mode of recruiting the army (which he aſſerted to be the beſt that could be adopted, and not at all injurious to the ſervice of the navy) but to the circumſtance of the reinforcements ſent to the Weſt Indies, and the detention of the tranſports at Plymouth, the ſeveral reſolutions were read, and agreed to by the houſe.

On the ſecond reading of the bill, introduced by the attorney-general to continue the ſuſpenſion of the habeas corpus act, a debate enſued, in which the queſtion, whether the ſuppoſition of a con-

ſpiracy having exiſted was not effectually done away by the verdicts of the juries, on the late ſtate trials, underwent a diſcuſſion in every point of view, but without receiving any additional light; and, on a diviſion, the numbers were, for the ſecond reading 239, againſt 53.

On Monday, Jan. 26, Mr. alderman Anderſon preſented the following petition from the common hall of the livery of the city of London:

'That your petitioners deplore the evil conſequences of war in general, but more particularly the diſaſtrous effects of the preſent war, on the trade, manufactures, and commerce of the Britiſh empire.'

'Your petitioners conceive, that none of the ends propoſed by the preſent war, either have been, or appear likely to be obtained; although it has been carried on at an unprecedented expence to this country, and has already produced an alarming increaſe of the national debt; augmented by ſubſidies paid to allies, who have notoriouſly violated their ſolemn engagements, and rendered no adequate ſervice for large ſums actually received by them, and wrung from the credulity of the generous and induſtrious inhabitants of this iſland.

'Your petitioners, from their preſent view of public meaſures, preſume humbly, but firmly, to expreſs to this honourable houſe their decided conviction that the principle upon which the war appears now to be carried on, neither is or can be eſſential to the proſperity, the liberty, or the glory of the Britiſh empire.

'Your petitioners, therefore, humbly pray, that this honourable houſe, diſclaiming all right of interfering in the internal concerns of France, will be pleaſed to take ſuch meaſures as they, in their wiſdom, ſhall think proper, for the purpoſe of promoting a ſpeedy peace between Great Britain and the power with whom we are at war.'

Mr. Grey introduced a promiſed motion reſpecting the idea of negotiating with the French; namely, 'That it is the opinion of this houſe, that the exiſtence of the preſent government of France ought not to be conſidered as precluding a negotiation for peace.'

As this motion was merely putting into a different form the great queſtion, whether it were not expedient and neceſſary to continue vigorouſly the war, in order to procure an honourable and permanent peace (a ſubject, which had been ſo recently and fully agitated) it will be only neceſſary here to obſerve, that the chancellor of the exchequer moved the following amendment; namely, 'That the houſe ſhould declare its reſolution to ſupport his majeſty in the proſecution of the juſt and neceſſary war in which we were involved; relying on the wiſdom of his majeſty, that he would ſo employ the reſources of the country, as ultimately to lead to the enjoyment of a ſecure and permanent peace; and on the deſire uniformly manifeſted by his majeſty to effect a pacification, on juſt and honourable grounds, with any government in France, under whatever form, which ſhall appear capable of maintaining the accuſtomed relations of peace and amity with other countries.'

Mr. Wilberforce ſaid, that the exiſtence of a republic in France ought not to prevent our entering into a negotiation with that country; which if we delayed, he feared we ſhould be obliged to ſue for peace under worſe circumſtances, as we did not now appear to have any reaſonable ground of ſucceſs in the proſecution of the war. Should we perſiſt in the war, and ſhould it turn out unſucceſsful, clamour would be the conſequence, and our internal ſecurity would be leſſened. He concluded with moving an amendment to the original motion, tending to qualify it; and not ſo contradictory as Mr. Pitt's amendment.

On a diviſion, Mr. Pitt's amendment was carried by 269 to 86; and Mr. Wilberforce's was rejected by 254 to 90.

Mr. Pitt's amendment being carried, Mr. Sheridan moved the following addition to it, which was negatived without a diviſion:

'And that this houſe are not of opinion that there are circumſtances in the preſent exiſting government of France which preclude all negotiation with the ſaid government, or render it incapable of maintaining the accuſtomed relations of peace and amity with other countries.'

On Tueſday, Jan. 27, a motion, exactly ſimilar to Mr. Grey's, was made in the houſe of lords by the duke of Bedford. An amendment, ſimilar to Mr. Pitt's, was moved by lord Grenville. On this occaſion, the biſhop of Landaff ſpoke for the firſt time; and as his lordſhip is diſtinguiſhed for wiſdom and moderation, and what he ſaid was different in its general purpoſe from what had been urged on either ſide of the houſe, it deſerves particular attention. From the retiredneſs of his life,' he ſaid, 'and the avocations of his duty, he had ſeldom troubled their

lordſhips' attention; but the importance of the occaſion had now called upon him. It was not only his concern for the paſt, but his fear for the future, that led him to give his ſentiments on this occaſion. He did not mean to take up their lordſhips' time by entering into any diſcuſſion on the juſtneſs or neceſſity of the war. The war had been termed a juſt and neceſſary one: he would firſt obſerve, that this expreſſion contained two diſtinct propoſitions. It was one thing, whether the war was juſt; another, whether it was neceſſary; and though the Chriſtian religion did not forbid war, yet when that religion ſhall prevail in its full force, wars will be no more. Every expedient ſhould be tried before war was made; peace ſhould be aſked and refuſed, and then tried again. But this, like every other ſubject, was that on which men would decide by their moral and religious views. He did not mean to impeach the conduct of any ſet of men, neither ſhould his mind be biaſſed by any motives but thoſe of truth and juſtice. After the firſt campaign, Great Britain had a glorious opportunity of determining the war and the fate of Europe. Then it could have ſaid, thus far ſhall your limits extend; not one acre of territory more ſhall you poſſeſs. Give up your ſyſtem of fraternization; of diſtracting the peace of Europe. Poſſeſs thoſe rights which are your own. France ſhall be at liberty to exerciſe that ſacred right of forming a government for herſelf upon her own principles; but ſhall not impoſe a government upon other nations, nor diſturb their tranquillity.—With reſpect to the cauſe of the war, he firſt conceived it to originate in a league formed by a ſet of princes to diſmember Europe. In this league, on his conſcience, he did not believe that his majeſty had any participation; neither would he believe that the king would give to ſuch a league his approbation. The war was begun by Germans, and then purſued by us, for the purpoſe of checking democratic principles. But war was no impediment to principles, neither was ſuch ſucceſs ſufficient to put down opinions. The mind of man will yield to nothing but to mild and lenient reaſonings. German princes will find that their governments are better protected by opinions than by armies. It is to opinions that the preſent ſovereign reigns in the hearts of his people; it is in opinions that he will find, that he makes a part of that conſtitution for which our anceſtors ſhed their blood, and for which we are now ready to die. He did not believe that our beloved ſovereign, amid the general alarm of other princes, had ever felt diſturbance for his royal perſon. His mind could ſoon be tranquillized by being told that he was part of that conſtitution which we all held ſo dear. Of that magna charta, the origin of our liberties, of the bill of rights that declared thoſe liberties, and of the integrity of thoſe laws by which we were ſo mildly governed, of the habeas corpus, which no man without the juſteſt cauſe ſhould ſuſpend; and who would be found, that would change theſe laws for thoſe which prevail in France? Who would give up our trials by jury, our ſeſſions and aſſizes, for a revolutionary tribunal? Or who ſo infatuated could be found, as to exchange the amiable family of Brunſwick for a ſanguinary and upſtart incendiary like Robeſpierre?

His lordſhip then took a view of the republican governments: that in France he declared to be a tremendous object of terror and diſmay. The Athenian, which was held up as a model of the beſt kind, was a moſt ſharp and cruel ſyſtem of dominion; and thoſe modern machines in America were not of ſufficient duration to prove their efficacy and utility. Their novelty excites ſuſpicion; let them prove their excellence by out-living their century. With reſpect to that form which was now in France, his lordſhip expreſſed his opinion, that after unceaſing revolutions, it would at laſt be ſettled with ſome form of monarchy.

Negotiation was now become matter of the moſt ſerious attention for their lordſhips; on the diſpatch much depended, by delay much may be loſt, and the throne of England may be ſhaken. He did not ſay that he ſhould open a treaty beneath the dignity of that which was becoming: no, he would make vigorous preparations by ſea and land; we would hold out peace or war. Peace we would prefer from humanity; but if war was ſought, we would diſcover the greatneſs of our reſources. We would tell the French, that they build upon our diviſions, but we would all continue to ſupport the throne, the ariſtocracy, and the people; the throne from the ariſtocracy, and the ariſtocracy from the people, and the people from the machinations of their own demagogues, and from the bloody ſcenes of foreign fraternization.

His lordſhip ſaid, that from the retiredneſs of a collegiate life, he was not connected with party, and that it was a matter of indifference to him who ſteered the

ceſſful of the ſtate, provided it moved even and ſafe in its courſe.

The atrocities committed in France were diſgraceful to human nature; but even theſe ſhould not prevent our negotiating a peace with them. We were not their avengers. Thoſe bloody tyrants would not eſcape the tremendous juſtice of God; he would vindicate his holy religion, which they had effaced, and almoſt deſtroyed. They had miſtaken the abuſe of religion for religion itſelf; the corrupt and abſurd ſuperſtitions of popery, for pure and rational Chriſtianity. His lordſhip then adverted to the finances of France, and ſaid he would not enter into the queſtion of calculation, as he was aſſured, that if we had even replaced a Louis on the throne of France, he would not return into our treaſures the ſums we had expended, nor coloniſe with his own ſubjects the deſolation his wars had made on our territories. From motives ſuch as theſe, his lordſhip ſaid that the motion of the noble duke had met his approbation.

After ſome other lords had ſpoken, lord Grenville's motion was carried by 113 to 37.

On Thurſday, Jan. 29, the bill for continuing the ſuſpenſion of the habeas corpus act paſſed the houſe of commons, there being, on a diviſion, 62 to 4; and, the ſame day, it was ſent to the lords.

On Monday, Feb. 2, Mr. Grey preſented a petition from a number of the inhabitants of the town of Southampton, praying, in general terms, for peace. On the other hand, Mr. alderman Curtis preſented a petition, ſigned by 1659 of the livery of London, ſtating their readineſs to ſupport his majeſty in the proſecution of the war, as the only mode of obtaining an honourable and permanent peace. Theſe petitions were ordered to lie on the table.

The ſame day, in a committee of the whole houſe, to take into conſideration the moſt effectual means of manning the navy, the chancellor of the exchequer introduced this important ſubject in general terms, reſerving a more minute ſtatement of the particulars to the day when the bill to that effect would be brought into the houſe. The committee were unanimous in opinion that ſome meaſures of this kind were neceſſary. The general idea propoſed by Mr. Pitt was, that men ſhould be furniſhed in a certain proportion by ſhips according to their tonnage, and alſo by the different counties and pariſhes; and bills to this effect were ordered to be brought in.

In the houſe of lords, on Tueſday, Feb. 3, the earl of Lauderdale roſe to move an amendment reſpecting the duration of the ſuſpenſion of the habeas corpus act; namely, that the words 'firſt of July' ſhould be inſerted, inſtead of the laſt day of the preſent ſeſſion of parliament, which, in the bill, was the time fixed for the ſuſpenſion to expire. He had offered the ſame motion the day before, but it was rejected. He now underſtood, that his amendment would meet with the concurrence of miniſters. The danger of the clauſe which he meant to amend, paſſing as it now ſtood, was this—that at a future time, ſhould a ſimilar ſuſpenſion be thought neceſſary at the beginning of a parliament, a ſimilar clauſe might be introduced, which would veſt in the crown the power given by this bill for the term of ſeven years, during which the parliament might be kept ſitting.

Lord Grenville ſaid, he ſhould not object to the amendment, although he did not agree to the danger which the noble earl apprehended from the clauſe as it now ſtood; becauſe if parliament were kept ſitting for the purpoſe of keeping the bill in force, ſo parliament might, if they thought the power it gave abuſed, paſs an act to repeal it.

The earl of Lauderdale replied, that this could not be effected ſo long as the king's prerogative to negative a bill exiſted.

The amendment was then put and carried.

It being then moved that the bill do paſs, a deſultory debate enſued, which turned principally on the queſtion already ſo much agitated, whether there had actually exiſted any conſpiracy. The majority in the houſe of lords were decidedly of opinion, that it had a real exiſtence, notwithſtanding proofs of it could not be brought home to any individual on the late trials; and, accordingly, the bill paſſed without a diviſion.

The next day, the following proteſt againſt the bill was entered on the journals:

Diſſentient, Die Mercurii 4 Feb. 1795.

BECAUSE, whatever pretence there may have exiſted in the laſt ſeſſion of parliament for ſuſpending the habeas corpus act, that pretence is now removed; the partial *ex parte* examination of the committees of parliament having been refuted by the verdicts of juries, who, with labour unexampled in the legal annals in this country, after duly weighing the evidence on both ſides, acquitted the perſons indicted for a treaſonable conſpiracy.

2. Becauſe intentions hoſtile to the conſtitution being entertained by perſons, few in number, and devoid of weight and conſequence in the country, do not juſtify the depriving all the people of Great Britain of that ſecurity which our laws ſo anxiouſly provide for perſonal liberty.

3. Becauſe we find, that as ſoon as theſe plots and conſpiracies (which have heretofore cauſed the ſuſpenſion of the people's right to their habeas corpus) had been dealt with according to law, and that the conſpirators had been convicted and puniſhed, the danger being over, the ſuſpenſion had dropt. In the ſame manner, when the proved innocence of the accuſed have negatived the ſuppoſed conſpiracy, and when it is not even pretended that any new or other plot exiſts, to continue to ſuſpend this great and eſſential ſafeguard of our freedom, is equally contrary to the example ſet us by our anceſtors, and inconſiſtent with that protection which, as legiſlators, we are bound to afford to the perſonal ſecurity of all our fellow-ſubjects.

4. Becauſe we conſider that the national ſpirit of Engliſh freedom, to which was owing the high place that we once held amid ſurrounding nations, is either checked or deadened by cauſeleſs acts of deſpotiſm; or that the diſguſt neceſſarily generated by ſuch a conduct is likely (if any thing can produce ſuch an effect upon this free and enlightened nation) to raiſe a ſpirit of diſaffection even to the conſtitution itſelf.

5. Becauſe, when we trace the hiſtory of the habeas corpus act, we find, among other ſecurities from oppreſſion, it was chiefly meant to enſure to the ſubject a ſpeedy trial, when accuſed of treaſon, or treaſonable practiſes, and to avert the tyranny of tedious impriſonment for thoſe crimes. We conceive, therefore, that if the legiſlature is, upon all occaſions of ſuſpicion of traiterous acts, to ſuſpend the operation of that moſt important and invaluable ſtatute, ſecurity to the ſubject muſt be removed at the very criſis, and in the very caſe when it was meant by the wiſe and enlightened framers of that law moſt to ſhield and protect him.

(Signed) GUILFORD,
NORFOLK, E. M.
BEDFORD,
LAUDERDALE.

[To be continued.]

IRELAND.

Speech of his Excellency the Lord Lieutenant to both Houſes of Parliament; Thurſday, January 22.

'My Lords and Gentlemen,

'IN obedience to his majeſty's commands, I reſort to your councils at a period which, in a peculiar manner, calls for the wiſdom and energy of parliament.

'His majeſty's determination is fixed; as long as he is ſupported by his faithful ſubjects, he never will be wanting to them or to himſelf; his majeſty has no intereſt but that of his people; no views but for their happineſs; no object but their general ſafety.

'The uniform tenor of your conduct has demonſtrated, that you will not only be deſirous, but zealous to ſecond and emulate the magnanimity of a ſovereign, formed to lead a nation that has ever been as firm to aſſert its liberties, as affectionately devoted to a government which maintains its own authority, for the ſole purpoſe of ſupporting thoſe liberties. As you are thus cordially attached to that ſovereign, and to the conſtitution, which it is his glory to protect, I have to announce to you, with true ſatisfaction, what you will hear with equal pleaſure, the intended marriage of his royal highneſs the prince of Wales, with the princeſs Caroline Amelia Eliſabeth, daughter of his moſt illuſtrious highneſs the duke of Brunſwic and Lunenburg; a princeſs of that illuſtrious houſe, to whoſe mild and conſtitutional ſway theſe kingdoms are highly indebted for the bleſſings they enjoy: this marriage promiſes the perpetuation of the ſame bleſſings under the ſame houſe.

'I have it alſo in command to inform you, that his majeſty has concluded a treaty of amity, commerce, and navigation with the United States of America, in which it has been his majeſty's object to remove, as far as poſſible, all grounds of jealouſy and miſunderſtanding, and to improve an intercourſe beneficial to both ſtates. As ſoon as the ratification of this treaty ſhall have been exchanged, and I ſhall have received a copy of it, I will direct it to be laid before you, in order that you may conſider if it will be neceſſary to make any proviſions for carrying into effect a treaty, in which the commerce of this kingdom is ſo materially and extenſively intereſted.

'Gentlemen of the Houſe of Commons,

'I have directed the eſtimates for the public ſervice, and the ſtate of the public accounts, to be laid before you.

'His majeſty has that aſſured confidence, grounded on a long and uniform experience of your loyalty, and your zeal for his ſervice, and the good of your country, that I think it unneceſſary to preſs you, in any particular manner, to make a proviſion adequate to the preſent awful ſituation of affairs.

'It is with pleaſure I acquaint you, that the proviſion will, in ſome degree, be facilitated by the circumſtance, that, during the exiſtence of ſuch a war as the preſent, the public revenue, together with the commerce of the kingdom, has kept up, and has been even augmented: advantages, which are due to the care and vigilance of our ſovereign, in the general protection provided by him for all his ſubjects.

'My Lords and Gentlemen,

'I earneſtly recommend to you a continuance of the laudable pains you have conſtantly taken to cultivate all your domeſtic advantages in commerce, in manufacture, and in ſuch public works, as have appeared directed to promote thoſe important objects. Theſe are the true foundations of all public revenue and public ſtrength. Your endeavours have had their fruit. The great ſtaple manufacture of this kingdom has increaſed beyond the moſt ſanguine expectations; an advantage principally owing to the conſtant ſuperintendance and wiſe proviſions of the parliament of Ireland; and next to thoſe, to the aſſured liberal and moſt merited encouragement, which it receives in the rich and extenſive market of Great Britain; a circumſtance, tending to cement the union, and to perfect the harmony, which happily ſubſiſt, and I truſt will ſubſiſt for ever, between the two kingdoms.

'Attached as you are to the general cauſe of religion, learning, and civilization, I have to recommend to your conſideration the ſtate of education in this kingdom, which in ſome parts will admit of improvement, in others may acquire ſome new arrangement. Conſiderable advantages have been already derived, under the wiſe regulations of parliament, from the Proteſtant charter ſchools; and theſe will, as uſual, claim your attention. But as theſe advantages have been but partial, and as circumſtances have made other conſiderations, connected with this important ſubject, highly neceſſary, it is hoped that your wiſdom will order every thing relating to it, in the manner moſt beneficial, and the beſt adapted to the occaſions of the ſeveral deſcriptions of men, which compoſe his majeſty's faithful ſubjects of Ireland.

'We are engaged in an arduous conteſt. The time calls not only for great fortitude, and an unuſual ſhare of public ſpirit, but for much conſtancy and perſeverance. You are engaged with a power, which, under the ancient forms of its internal arrangement, was always highly formidable to the neighbouring nations. Lately this power has aſſumed a new ſhape: but with the ſame ambition, and much more extenſive and ſyſtematic deſigns, far more effective, and without compariſon, more dreadful in the certain conſequences of its eventual ſucceſs; it threatens nothing leſs than the entire ſubverſion of the liberty and independence of every ſtate in Europe. An enemy to them all, it is actuated with a peculiar animoſity againſt theſe kingdoms, not only as the natural protection of the balance of power in Europe, but alſo, becauſe, by the poſſeſſion of a legal, humane, and rational freedom, we ſeem to reproach that falſe and ſpurious liberty, which, in reality, is an ignominious ſervitude, tending to extinguiſh all good arts, to generate nothing but impiety, crime, diſorder, and ferocious manners; and to end in wretchedneſs, and general deſolation.

'To guard his people from the enterpriſes of this dangerous and malignant power, and for the protection of all civilized ſociety againſt the inroad of anarchy, his majeſty has availed himſelf of every rational aid, foreign and domeſtic; he has called upon the ſkill, courage, and experience of all his ſubjects, whereſoever diſperſed; and you muſt be duely ſenſible, in ſuch a criſis as the preſent, which rarely occurs in the courſe of human affairs, of the advantage of his majeſty's thus endeavouring to profit of the united ſtrength and zeal of every deſcription of his ſubjects.

'I have to aſſure you of his majeſty's moſt cheerful concurrence in every meaſure, which your wiſdom and comprehenſive patriotiſm ſhall point out for this ſalutary purpoſe.

'On my part you ſhall find me, from principle and from inclination, thoroughly diſpoſed to concur with his majeſty's paternal wiſhes, and the meaſures of his parliament. On a cordial affection to the whole of Ireland, and on a conduct ſuitable to that ſentiment, I wiſh to found

my own perſonal eſtimation, and my reputation in the execution of the great truſt committed, by the moſt beneficent of ſovereigns, to my care.'

After his excellency had retired, an addreſs to his majeſty, expreſſive of their determination to ſupport his majeſty, in the proſecution of the preſent war in which Great Britain is engaged with France, was moved and carried; as was alſo an addreſs to the lord-lieutenant, for his excellent ſpeech from the throne.

In the houſe of commons, the addreſs was moved by Mr. Grattan and ſeconded by the hon. Mr. Stewart. An amendment, to the following purport, was moved by Mr. Duquery: 'That his majeſty's faithful commons of Ireland are determined to ſtand or fall with Great Britain; but they intreat his majeſty, in the preſent ſituation of affairs, not to refuſe entering into a negotiation of peace with the preſent exiſting government of France.'

The amendment was negatived without a diviſion; and, on the queſtion for the addreſs, it was carried by 148 againſt 2 noes, who were the two tellers, lord Edward Fitzgerald and Mr. Alexander Montgomery. An addreſs to the lord-lieutenant was then unanimouſly agreed to.

On the 3d of February, the houſe voted the ſum of 200,000l. for the purpoſe of encouraging ſeamen to enter on board the Britiſh fleet.

THE THEATRE.

ON Saturday, Jan. 31, a dramatic tale, written by Mr. Andrews, was preſented for the firſt time, at the Theatre Royal in Covent Garden, under the title of THE MYSTERIES OF THE CASTLE.

The characters were, Hilario, Mr. Lewis; Carloe, Mr. Pope; Fractioſo, Mr. Quick; Count Montoni, Mr. Harley; Montauban, Mr. Incledon; Bernardo, Mr. M'Cready; Cloddy, Mr. Fawcett; Valoury, Mr. Munden; Fiſherman, Mr. Powell; Centinel, Mr. Williamſon; Serjeant, Mr. Davenport; Captain of a veſſel, Mr. Thompſon.—Julia, miſs Wallis; Conſtantia, Mrs. Mountain; Annetre, Mrs. Mattocks.

To thoſe who are acquainted with the novels of the ingenious Mrs. Radcliff, many of the incidents in the preſent piece are familiar, but for our readers, in general, we ſhall give a brief ſketch of the plot of this dramatic tale.

Fractioſo, a man in power at Meſſina, had two beautiful daughters, one of whom, Julia, was devoted to Carlos, an amiable young nobleman, who is equally devoted to her. Julia, however, is compelled to give her hand to count Montoni, a Sicilian nobleman, becauſe her father is avaricious, and becauſe Montoni is higher in rank and richer than Carlos. Such, however, was the attachment of Julia, to Carlos, that Montoni could not obtain her hand, even with all the force of parental authority to countenance his addreſſes, till he had deceived her with a falſe account of the perfidy of Carlos, and his marriage with another.

Notwithſtanding Julia has married Montoni, ſhe reſolutely withholds from him all matrimonial rights. Montoni, deſpairing to overcome the regret of Julia for the loſs of Carlos, and fearing the latter may diſcover the impoſition by which he has been deprived of his miſtreſs, contrives, with the aſſiſtance of his minion Bernardo, to circulate a report that Julia is dead; and, after a pretended burial, he orders her to be impriſoned in an ancient caſtle, having at length determined to kill her. Carlos, agonized at the ſuppoſed death of Julia, and ſtung with rage againſt Montoni, arrives at Meſſina. A ſharp conteſt paſſes between him and Montoni, but they are ſeparated without injury. Carlos, with his friend Hilario, who is the lover of Julia's ſiſter, Conſtantia, happened to paſs the caſtle in which Julia is confined. A bell tolls, and lights are ſeen through the windows of this caſtle, which, by the direction of Montoni, ſhews many ſigns of being enchanted to deter curioſity from exploring its receſſes, and diſcovering Julia. Carlos conceiving that ſomebody may be in diſtreſs in this melancholy manſion, reſolves to enter it, contrary to the wiſh of his friend Hilario. A poacher who had hid himſelf under the wall, ſhews the two friends a ſecret way into the caſtle, into which they enter, juſt as Montoni, aſſiſted by Bernardo, was about to murder his wife. At the moment when he is going to ſtrike the fatal blow, Carlos enters, and Montoni retires, partly in horror, and partly with a view to diſgrace his wife, by a report, that while he thought her dead, he had found her with Carlos in the caſtle. This artifice of Montoni ſucceeds for a little time; but the teſtimony of the poacher,

who had introduced the two friends into the caſtle, and of Bernardo, who repents of having aided his maſter's villanies, diſcover the whole plot.

Carlos, in deſpair, had retreated to Calabrio, at firſt indeed to decide his quarrel with Montoni in a duel, but chiefly to mourn away his miſerable life. He is wounded by Montoni, but cured by a benevolent fiſherman. Julia, eſcorted by Hilario, arrives in a veſſel, of which he gets poſſeſſion by ſtratagem in Calabrio, and is ſoon followed by her father, who reveals the whole villany of Montoni; and, having alſo diſcovered that Montoni had a wife alive when he married Julia, beſtows the latter in maiden purity, upon the faithful Carlos. Hilario marries the other daughter, and the parties are all happy, except Montoni, who, with poetical juſtice, is doomed to be a wretched outcaſt from his country.

There is conſiderable intereſt through the whole of this piece. The ſcenes of terror ſtrongly engage the mind, and they are properly relieved by many whimſical and entertaining ſituations. The ſcenery is very ſtriking, particularly the views in Meſſina, the caſtle, and its interior, and the ruins in Calabria—The muſic is admirable. The prologue and epilogue were delivered with much effect by Mr. Harley and Mrs. Mattocks.

On Saturday, Feb. 14, a new farce, called CROTCHET LODGE, the production of Mr. Hurlſtone, was preſented at the ſame theatre. It is genuine farce. The humour is broad, and irreſiſtably laughable. The characters, though not new, have features ſtriking and peculiar. A landlord, ſtage-ſtruck, continually anſwers from ſcraps of plays, and which is perhaps carried too far, for it ceaſes after a few ſpecimens, to entertain. The ladies of Crotchet Lodge, the one with a rage for muſic, and the other for painting, are well ſuſtained, their technical anſwers are truly farcical, but not extremely amuſing. The principal character, a valet who aſſumes different diſguiſes, was well executed by Fawcett; the prologue, in particular, was very happy, and delivered by him, as a lame ſailor, with great effect.

The drama was received by a crouded houſe, with warm and univerſal applauſe.

On Thurſday, Feb. 12, a Grand Heroic Pantomime, called ALEXANDER THE GREAT, or THE CONQUEST OF PERSIA, was preſented, for the firſt time, at Drury-lane theatre.

The many inaccuracies which pervaded the whole of the performance operated ſo much againſt the general effect of the ſpectacle, that it would be uncandid to exerciſe the ſeverity of criticiſm on defects which were produced, not in conſequence of erroneous deſigns, but inefficacy of execution. With all its temporary imperfections, we do not heſitate to pronounce it a well-conceived ſtory, making the neceſſary allowance for the utter impoſſibility of bringing within the compaſs of a ſtage, a repreſentation adequate to convey a correct idea of the great events which have been made the ſubject of the piece. Its grandeur and magnificence, in ſome particulars, ſurpaſs any thing of the kind we have ever witneſſed, particularly the repreſentation of the palace of the king of Perſia, and the camp of Alexander. The order of the proceſſion of Alexander into Babylon was well arranged. The chariot of Darius, and the troop of horſemen, produced a diſplay of novelty and ſplendour that afforded the moſt pleaſing effect. The horſes which drew the chariot, and one rode by a chief, are of a beautiful cream colour; the remainder black, richly capariſoned.

On the whole, it is a moſt ſuperb pageant, got up with much taſte, and at a vaſt expence.—The dreſſes and ſcenery are elegant to an extreme.

On Saturday February 21, was performed, at Covent-garden theatre, a new play, under the title of ENGLAND PRESERVED!

The following are the characters:

Earl of Pembroke (Regent) Mr. Pope; Earl of Surrey, Mr. Holman; Earl of Cheſter, Mr. Farren; Biſhop of Wincheſter, Mr. Hull; lord William, ſon to Pembroke, Mr. Middleton; Lincoln, Mr. Davies; Squire, Mr. M'Cready; Dauphin, Mr. Harley; Nevers, Mr. Haymes; Fitzwalter, Mr. Richardſon; Beaumont, Mr. Claremont.—Lady Surrey, Miſs Wallis.

The ſtory of this play is taken from the melancholy epocha of the Engliſh hiſtory, at the commencement of the reign of the minor Henry the third, when the French, who, with the dauphin at their head, had been invited over by the rebellious barons, were in poſſeſſion of a conſiderable portion of the kingdom, and threatened to reduce the whole under the dominion of France.

The earl of Pembroke, the regent, a nobleman, wiſe, prudent, and reſolute, makes a ſucceſsful ſtand againſt the united forces of the French and the rebels, though ſupe-

rior to him in numbers. Several of the diſcontented barons ſeeing the danger that threatens their country from the ambition of France, and repenting of their treaſonable conduct, go over to Pembroke. Among theſe is his ſon, lord William, and his ſon-in-law, earl Surrey, who had joined the league againſt king John. Thus reinforced, the regent appears in the north, whither the French had marched after the unſucceſsful ſiege of Dover-caſtle. At Lincoln the oppoſing armies meet, and the French are completely defeated. Pembroke, however, receives intelligence, that an immenſe fleet of the enemy, filled with reinforcements, is off the coaſt. Undiſmayed by this circumſtance, he reſolves to follow up his victory before theſe ſuccours can join the French.

The dauphin, elated by the expected arrival of freſh troops, reſolves to lay ſiege to London, and ſits down before it. Pembroke advances, and hears that the French navy is entirely deſtroyed by the ſuperior valour of the Engliſh ſeamen. He preſſes upon the dauphin, who, diſpirited by his recent calamity, ſubmits himſelf and all his followers to the regent. He is generouſly permitted to retire to France with his ſuite, and leaves England united, free and independent.

The ſtory is relieved by the domeſtic woes of lady Surrey, whoſe huſband is intercepted in his flight from the French. In the habit of a pilgrim, ſhe explores him in his priſon, and bribes his keeper to connive at his eſcape. She leaves him in the hope of being ſpeedily joined by him in a certain place, but his attempt to eſcape is unſucceſsful. The diſappointment is productive of a high wrought ſcene of diſtreſs to his wife. Upon the ſurrender of the fort, however, he obtains his liberty, and is happily re-united to his family.

The hiſtorical incidents of this play are happily choſen, and very judiciouſly worked up; and the domeſtic diſtreſſes of lady Surrey are naturally affecting. The language is in many parts poetical, in all very eaſy and appropriate.—The play was announced for repetition, amid the moſt general plaudits.

AFFAIRS of FRANCE,

Continued from Vol. XCV, Page 455.

THE affair of Carrier, who had been accuſed of committing ſuch cruelties, while on a miſſion at Nantes, continued, for ſome time, to engage the attention of the convention. He was finally delivered over to the revolutionary tribunal, condemned, and guillotined amid the acclamations and execrations of the people.

On the 25th of November, it was announced to the convention, that general Dugommier had obtained a great victory over the Spaniards, in Catalonia, but that the general himſelf was killed. The convention ordered that his name be inſcribed on the column in the Pantheon, among the names of the glorious defenders of their country, and that immediate enquiry be made reſpecting his family. On the 28th, advices were received of a ſecond great victory over the Spaniards, in Catalonia; in which the latter loſt all their artillery and baggage, with tents for 50,000 men; and their commander in chief, the count de l'Union, was ſlain. Subſequent advices ſtated the capture of St. Fernando de Figueras, one of the ſtrongeſt and moſt important fortreſſes in Spain. This place, which was provided with a numerous garriſon and artillery, and might have held out ſix months, ſurrendered without firing a ſhot. One conſequence was, the capture of Roſas, or Roſes, a ſeaport on a bay of the ſame name, which lies ten miles to the eaſt of Figueras. This laſt place, however, did not ſurrender till the 5th of January, about ſix weeks after.

Letters received on the 29th of November from La Vendee, announced, that the ſyſtem of juſtice and humanity, adopted in that department, promiſed a ſpeedy termination of the civil war. The Chouans were coming in daily: 'Since you pull down the ſcaffolds,' they ſaid, 'we will no longer fight againſt our brethren!' This auſpicious commencement of the ſyſtem of moderation was not loſt on the convention. On the 2nd of December, they paſſed a decree, granting an amneſty to the rebels of La Vendee, which, in the ſequel, was productive of the happieſt effects. The inhabitants, to the number of 80,000, concurred in bleſſing this act of national generoſity; the republican army received with tranſport this pledge of returning tranquillity; and the rebels on the banks of the Loire have exchanged their cry from *Vive le Roi* to *Vive la Republique*.

On the 30th of December, the following decree paſſed:

'The decrees, enjoining the ſequeſtration of all property, belonging to the ſubjects of thoſe powers with whom the republic is at war, ſhall no longer be obſerved; and all the ſums, in purſuance of them, paid by French citizens into the national treaſury, ſhall be returned.' The ſame day, the repeal of the law, for granting no quarter to the Britiſh, Hanoverians, and Spaniards, was decreed amid the loudeſt and moſt general plaudits.

From this period to the 7th of January, the convention were employed in the diſcuſſion of various regulations, and on the means of puniſhing thoſe who had been accomplices of Robeſpierre in the late atrocities. One of the meaſures adopted was the appointment of a committee of twenty-one, to enquire whether there were any grounds of accuſation again Colloſ d'Herbois, Billaud de Varennes, and Barrere, as aſſociates and accomplices of that tyrant.

On the 21ſt of January, the exceſſive rigour of the ſeaſon did not prevent a great number of citizens from repairing to the celebration of the feſtival, in the interior of the Tuilleries, on the anniverſary of the king's death. A ſcaffold was erected before the great baſin, on which was poſted up the Statue of Liberty. There the preſident of the convention pronounced a ſpeech. When he had done, the repeated exclamations of *Vive la Republique! Vive la Convention!* reſounded from every quarter. A general diſcharge of artillery terminated the ceremony, and all the theatres performed gratis.

The effigy burnt in the evening in the yard of the jacobins convent wore a double face, the one to repreſent tyranny, and the other royaliſm. It was brought before the doors of the hall of the convention, there to make an *Amende Honorable* to the people. When burnt, its aſhes were taken up in a *pot de chambre*, and carried to the common ſhore amid the popular applauſes.

[To be continued.]

FROM THE LONDON GAZETTES.

Madrid, January 7.

THE mail, arrived yeſterday from America, brought the account of a conſpiracy having been diſcovered at Mexico toward the end of Auguſt laſt.

The plot, by which it was deſigned to murder the viceroy and his family, to take poſſeſſion of the royal and archiepiſcopal palaces, the mint, inquiſition, and other public buildings, and the principal private houſes, and to ſet fire to and deliver over the city to the plunder of the populace, and diſcontented Indians of ſome neighbouring towns, was conducted by two Frenchmen, who had ſucceeded in ſeducing ſeveral Spaniſh inhabitants to their intereſt, and were to be aſſiſted in the execution of their plan by a number of their countrymen, who, contrary to the general practice of this government, had been ſuffered to remain in Mexico after the commencement of the war.

Nearly about the ſame time a ſimilar exploſion was to have taken place at Santa Fé, the capital of the new kingdom of Granada, in all its circumſtances ſimilar to the preceding, but it was likewiſe prevented by diſcovery, the very day before it was to happen.

Admiralty-office, Feb. 3. A letter from rear-admiral Bligh, late captain of his majeſty's ſhip the Alexander, to Mr. Stephens, was received at this office, the 30th of laſt month.

On Board the Marat, at Breſt,
Sir, Nov. 23, 1794.

The arrival of the Canada muſt long ſince have informed their lordſhips of my misfortune, in loſing his majeſty's ſhip Alexander, late under my command, having been taken by a ſquadron of French ſhips of war, conſiſting of five of 74 guns, three large frigates, and an armed brig, commanded by rear-admiral Neilly; farther particulars and details I herewith tranſmit you, for their lordſhips information.

We diſcovered this ſquadron on our weather-bow, about half paſt two o'clock, or near three, in the morning on the 6th inſtant, being then in latitude 48 degrees, 25 min. north, 7 deg. 53 min. weſt, the wind then at weſt, and we ſteering north-eaſt; on which I immediately hauled our wind, with the larboard-tacks on board, and without ſignal, the Canada being cloſe to us. We paſſed the ſtrange ſhips a little before four o'clock, the neareſt of which at about half a mile diſtant, but could not diſcover what they were. Shortly after we bore more up, let the reefs out of the top-ſails, and ſet ſteering-ſails.

About five o'clock, perceiving, by my night-glaſs, the ſtrange ſhips to ſtand after us, we crowded all the ſail we could poſſibly ſet, as did the Canada, and hauled more to the eaſtward. About day-break the Canada paſſed us, and ſteering more to the northward than we did, brought her on our larboard-bow. Two ſhips of the line and two frigates purſued her; and three of the line and one frigate chaſed the Alexander. About half paſt ſeven o'clock, the French ſhips hoiſted Engliſh colours. About a quarter paſt eight o'clock, we hoiſted our colours; upon which the French ſhips hauled down the Engliſh, and hoiſted theirs; and drawing up within gun ſhot, we began firing our ſtern-chaces at them, and received their bow-chaces.

About nine o'clock, or ſhortly after, obſerving the ſhips in purſuit of the Canada, drawing up with her, and firing at each other their bow and ſtern chaces, I made the Canada's ſignal to form a-head for our mutual ſupport, being determined to defend the ſhips to the laſt extremity; which ſignal ſhe inſtantly anſwered, and endeavoured to put it in execution by ſteering toward us; but the ſhips in chaſe of her, ſeeing her intentions, hauled more to ſtarboard to cut her off, and which obliged her to ſteer the courſe ſhe had done before. We continued firing our ſtern chaces at the ſhips purſuing us till near eleven o'clock, when three ſhips of the line came up, and brought us to cloſe action, which we ſuſtained for upward of two hours, when the ſhip was become a complete wreck, the main-yard, ſpanker-boom, and three top-gallant-yards were ſhot away, all the lower maſts ſhot through in many places, and expected every minute to go over the ſide; all the other maſts and yards were alſo wounded, more or leſs, nearly the whole of the ſtanding and running rigging cut to pieces, the ſails torn into ribbands, and her hull much ſhattered, and making a great deal of water, with difficulty ſhe floated into Breſt: at this time the ſhips that had chaſed the Canada had quitted her, and were coming faſt up to us, the ſhot of one of them at the time paſſing over us. Thus ſituated, and cut off from all reſources, I judged it adviſeable to conſult my officers, and accordingly aſſembled them all on the quarter-deck; when, upon ſurveying and examining the ſtate of the ſhip, (engaged as I have already deſcribed) they deemed any farther reſiſtance would be ineffectual, as every poſſible exertion had already been uſed in vain to ſave her, and therefore they were unanimouſly of opinion, that to reſign her would be the means of ſaving the lives of a number of brave men. Then, and not till then, (painful to relate) I ordered the colours to be ſtruck: a meaſure which, on a full inveſtigation, I hope and truſt their lordſhips will not diſapprove. Hitherto I have not been able to collect an exact liſt of the killed and wounded, as many of the former were thrown overboard during the action, and when taken poſſeſſion of, the people were divided, and ſent on board different ſhips, but I do not believe they exceed forty, or thereabout. No officer above the rank of boatſwain's mate was killed. Lieutenant Fitzgerald, of the marines, meſſ. Burns, boatſwain, and M'Curdy, pilot, were wounded, but are in a fair way of doing well.

The cool, ſteady, and gallant behaviour of all my officers and ſhip's company, marines as well as ſeamen, throughout the whole of the action, merits the higheſt applauſes; and I ſhould feel myſelf deficient in my duty, as well as in what I owe to thoſe brave men, were I to omit requeſting you will be pleaſed to recommend them in the ſtrongeſt manner to their lordſhips favour and protection; particularly lieutenants Godench, Epworth, Carter, Weſt, and Daracort; major Tench, lieutenants Fitzgerald and Brown of the marines; Mr. Robinſon the maſter, together with the warrant and petty officers, whoſe bravery and good conduct I ſhall ever hold in the higheſt eſtimation. I have hitherto been treated with great kindneſs and humanity, and have not a doubt but that I ſhall meet with the ſame treatment during my captivity. I am, with great reſpect, &c.

R. R. BLIGH.

Horſe-Guards, Feb. 14. A diſpatch, of which the following is an extract, dated Deventer, January 21, 1795, has been received from the hon. lieutenant-general Harcourt, by the duke of York, and communicated by his royal highneſs to the right hon. Henry Dundas, one of his majeſty's principal ſecretaries of ſtate:

'I have the honour to acquaint your royal highneſs of the arrival of the army in their cantonments on the banks of the Yſſel, on the 18th inſtant, though not without ſome loſs, as ſome of the traineurs, unable to ſupport the fatigues of the march and the extreme ſeverity of the weather, were left behind, and have probably fallen into the hands of the enemy.

"It is a matter of no ſmall ſatisfaction to acquaint your royal highneſs, that we have not only ſaved all the ordnance and moſt of the other ſtores depoſited at Arnheim, but that we have burnt all the veſſels containing forage and ſtores upon the Leck, and have deſtroyed moſt of the ammunition contained in fifteen ordnance veſſels at Rotterdam.

Horſe-Guards, Feb. 14. A diſpatch, of which the following is a copy, has been received from general the hon. ſir John Vaughan, K. B. by the right hon. Henry Dundas.

Sir, Martinico, Dec. 18, 1794.

The evacuation of Fort Matilda, Guadaloupe, was an event to be expected; the poſition of the place is weak, the ground riſing inland immediately from the Glacis. The work, which has been added at different times, is irregular, preſents a narrow front to the ſtrong ground to the eaſtward, and has been conſtructed with bad maſonry.

Under theſe circumſtances lieutenant-general Preſcott, with a ſmall garriſon, protracted the ſiege from the 14th of October, to the 10th of December. Early in December, the enemy's batteries were increaſed ſo as greatly to exceed the artillery of the garriſon. Their fire on the 6th inſtant, diſmounted all our guns upon the cavalier, which is the higheſt and moſt commanding part of the fort; the curtain, thence to the next baſtion near the town, and the faces and flanks of that baſtion in many places, threatened to fall into the ditch; the number of killed and wounded was proportional to the effect made upon the work; and the place became no longer tenable.

On the night of the 10th inſtant, general Preſcott, having previouſly arranged the order and time of retreat with admiral Thompſon, the whole garriſon was embarked without loſs.

General Preſcott reports, that it has been greatly owing to the ready aſſiſtance afforded to the garriſon by admiral ſir John Jervis, and ſince by admiral Thompſon, that he was enabled ſo long to reſiſt the efforts of the enemy. He alſo gives the higheſt encomiums to captain Bowen, of the Terpſichore, who ſuperintended the embarkation, and by whoſe able diſpoſition of the boats every thing was managed with the moſt perfect regularity; unfortunately he was ſeverely wounded, but we hope not in ſuch a manner as to endanger his life.

Of the conduct of all the officers and men, the general makes a moſt favourable report, expreſſive of his entire ſatisfaction of their behaviour during the whole of the ſiege.

I beg to expreſs to you my approbation of the conduct of general Preſcott in the defence of Fort Matilda: it has been judicious in a high degree; and throughout the whole tranſaction he has ſhewn the greateſt judgment and reſolution. I have the honour to be, &c.

JOHN VAUGHAN.

Here follows a letter from general Preſcott, containing the particulars of the ſurrender of Fort Matilda, as ſtated above; alſo a return of the total of the killed and wounded; the former being 16, the latter 78. The officers wounded are, captain Walker, of the 60th regiment; midſhipman Lemage, of the Bellona; midſhipman Anguin, of the Theſeus; Mr. Johnſton, volunteer, of the Vanguard.

The garriſon, on the evacuation of the fort, conſiſted of one lieutenant colonel, nine captains, 11 lieutenants, three enſigns, two aides de camp, one fort major, three ſurgeons, two mates, one aſſiſtant commiſſary, 45 ſerjeants, ſix drummers or fifers, 481 rank and file, and 45 ditto ſick.

Here follow two letters from vice-admiral Caldwell, mentioning the arrival of the Ganges and Montague, at Fort Royal, Martinico, on the 19th of November, and the capture of the Jacobin of 24 guns, and ſome other veſſels of ſmaller force; alſo the capture of La Piquo, a French frigate of 38 guns, after an engagement of five hours, the following particulars of which, by Mr. Milne, the ſecond lieutenant of La Blanche frigate, are included in the admiral's diſpatches:

The Proceedings on Board his Majeſty's Ship Blanche, before and during the late memorable Engagment.

Jan. 4, 1795. At day-light ſaw a frigate at anchor outſide of harbour of Point-a-Petre. At 7 A. M. ſhe got under way, and kept working under her topſails, backing her mizen-topſail at times to keep company with a ſchooner. We run toward her until nearly within gun ſhot of Fort Fleur d'Epee, then tacked, hove to, and filled occaſionally. Finding the French frigate not inclined to come out from the batteries, we made ſail to board a ſchooner coming down along Grand Terre. At 11 A. M. fired a gun,

and brought her to; ſhe proved an American from Bourdeaux, and appearing ſuſpicious, detained the maſter, and took her in tow. At this time the battery of Grozier fired two guns at us, and the frigate fired ſeveral, and hoiſted her colours. None of the ſhot reached us. Finding her ſtill not inclined to come out, we made ſail toward Marigalante, under topſails and courſes.

Monday, at 4 P. M we tacked and hove to, took out the American crew, and ſent a petty officer and men into her. Saw the frigate ſtill under Grand Terre. At 6 P. M. wore ſhip, and ſtood toward Dominique, with the ſchooner in tow. At half paſt 8 P. M. ſaw the frigate about two leagues aſtern, eaſt of the ſchooner; tacked, and made ſail. At a quarter paſt 12 A. M. paſſed under her lee on the ſtarboard tack, ſhe on the larboard tack, and exchanged broadſides. At half paſt 12 A. M tacked and came up with her faſt. When within muſket-ſhot, ſhe wore with an intention to rake us; we wore at the ſame time, and engaged her nearly aboard. At 1 A. M. put our helm a ſtarboard, and run acroſs her ſtern, and laſhed her bowſprit to our capſtern; kept firing our quarter-deck guns, and other guns that would bear into her, and muſketry, which ſhe returned from her tops and from her quarter-deck guns, run in amid ſhip fore and aft. At this time our main and mizen maſts went overboard, and they attempted to board us, but were repulſed. At a quarter paſt 2 A. M. ſhe dropped aſtern (at this time captain Faulknor fell.) We got a hawſer up, and made her well faſt with her bowſprit abreaſt of our ſtarboard quarter. The marines keeping a conſtant fire of muſketry into her. Finding the carpenters could not make the ports large enough, we blew out as much of the upper tranſom beam as would admit the two aftermoſt guns on the main deck to be run out, and fired into her bows. At 2 A. M. all her maſts were ſhot away. In this ſituation we towed her before the wind, engaging till a quarter paſt five, when ſhe called out, that 'She had ſtruck!' The ſecond lieutenant and ten men then ſwam on board, and took poſſeſſion of La Pique, of - 26 - 12 pounders, French.
8 - 9 ditto, ditto.
4 - 32 carronades, braſs,
with a number of braſs ſwivels on her gunwall. At the time of action we had away in prizes two maſters' mates, and twelve men. They had 76 killed, 110 wounded, and 30 loſt with the maſts. Their complement at the beginning of the action was upward of 400 men. Our loſs, including captain Faulknor, is eight killed, and 21 wounded.—They came out on purpoſe to fight us.

Captain Faulknor was ſhot through the heart by a Frenchman, from the bowſprit of La Pique—Captain Faulknor having previouſly himſelf laſhed the bowſprit of La Pique to the capſtern with his own hands.

Firſt lieutenant Watkins gallantly fought the ſhip after captain Faulknor fell; and lieutenant David Milne was ſecond lieutenant.

Killed: captain Robert Faulknor; Mr. William Bolton, midſhipman; five ſeamen, and one marine.

Wounded: Mr. Charles Herbert, midſhipman; Iſaac Hutchinſon quarter-maſter; Philip Griffiths, ditto; William Fletcher, armourer; George Dice, ſerjeant of marines; twelve ſeamen and four marines.

Extract of a Letter from Vice Admiral Caldwall, to Mr. Stephens, dated off Martinique, Jan. 15, 1795.

You will pleaſe to acquaint the lords commiſſioners of the admiralty, that general ſir John Vaughan and myſelf think it neceſſary to ſend a frigate to England immediately, to inform government that on the 6th inſtant, a convoy from France, under two or three frigates, got into Point-a-Petre, Guadaloupe.

Incloſed is a copy of captain Wilſon's minutes.

Minutes of Proceedings on Board his Majeſty's Ship Bellona, George Wilſon, Eſq. Commander, Jan. 5, 1795.

On Monday, Jan. 5, 1795, lat. 16 30, Deſeada bearing weſt, diſtance 12 leagues, at eight A. M. deſcried two ſail ſtanding toward us; the weather being very hazy, I could only perceive one to be a frigate, which tacked and ſtood from us. We chaſed her with light winds and very hazy weather. About twelve o'clock I diſcovered ten ſail to leeward, lying to. Upon making them plain, from their ſize, ſuppoſed five of their ſhips frigates. At five o'clock, made the Alarm's ſignal to attack the convoy, the frigates dropped in their rear and formed; the ſternmoſt I came up with, and began to fire, when ſhe ſtruck. I perceived four others hauled out, apparently with an intention to engage. At eight o'clock I ſent an officer and boat on board the frigate to take poſſeſſion, and

found her to be Le Duras, of twenty guns, 400 troops, and ſeventy ſeamen. They reported her in a ſinking ſtate, during which time I lay to expecting the other frigates to fetch me on the ſame tack; when captain Carpenter hailed me to obſerve the ſame. At half paſt eight, I ſaw the frigates had borne up, upon which I deſired captain Carpenter would take charge of the prize, and follow with all expedition. I immediately made ſail, but the night was ſo dark and ſqually that I could not keep ſight of them. At twelve o'clock found myſelf ſo near Deſeada that I was obliged to haul off. It blowing very hard in the morning, I was to leeward of Deſeada. As ſoon as I could put men on board the prize, I made ſail for Antigua, but could not reach St. John's that night. In the courſe of the night the prize had driven to leeward. I ordered captain Carpenter to carry her to St. Kitt's, and take her under charge until further orders. I made the beſt of my way to Martinique, being in want of proviſions and water.

L'Eſculle, a 74, ent down, mounting 46 guns, and 500 men; L'Aſtree, of 36 guns; La Leveret, 20 guns; La Prompte, 20 guns; Le Duras, 20 guns; and ten armed tranſports, ſailed from Breſt, on the 17th of November laſt, with troops and warlike ſtores. The Duras has on board field pieces, mortars, ſhot, ſhells, great quantities of ſmall arms and entrenching tools of all ſorts; numbers not aſcertained.

Madrid, Jan. 28. By accounts publiſhed by this court of the proceedings of the enemy before Roſas, dated the 11th inſtant, it appears that the place ſtill held out, notwithſtanding the evacuation of the ſmall fort de la Trinidad; that the operations of the enemy had been conſiderably ſlackened by ſome deep falls of ſnow, and the general inclemency of the weather; and that a ſpirited enterprize had been executed by a ſmall body of Spaniſh volunteers on the enemy's park of artillery, in which they ſucceeded in ſpiking fourteen guns, having killed and made priſoners near 150 artillery men.

Accounts have alſo been received here, that on the 10th inſt. admiral Langara, in cruiſing off the coaſt of Catalonia, fell in with and captured the French frigate l'Iphigenie, of thirty-two guns, which had ſailed from Toulon, on the 4th inſt. in company with La Veſtale. They had been ſeparated three days before in a ſtorm, in which it was ſuppoſed that La Veſtale was loſt.

SHERIFFS *appointed for the Year* 1795.

Bedfordſhire, John Harvey, of Ickwell,
Berks, William Thoyts, of Surhamſtead,
Bucks, Lovell Badcock, of Little Miſſenden,
Cambridge and Huntingdonſhire, Thomas Quintin, of Hatley St. George,
Cheſhire, James Hugh Smith Barry, of Marbury.
Cornwall, Ralph Allen Daniel, of Truro, eſqrs.
Cumberland, Sir James Graham, of Netherby, bart.
Derbyſhire, William Drury Lowe, of Lockow,
Devonſhire, William Clarke, of Buckland Tout Saints,
Dorſetſhire, Edward Greathed, of Uddings,
Eſſex, John Manſon, of Great Bromley-hall,
Glouceſterſhire, Samuel Edwards, of Botham-lodge,
Herefordſhire, John Green, of Cage-Brooke,
Hertfordſhire, James Harding, of Tring,
Kent, Gabriel Harper, of Gore-court,
Leiceſterſhire, Edward Muxloe, of Pickwell,
Lincolnſhire, Ayſcough Boucherett, of Stalingborough,
Monmouthſhire, Richard Morgan, of Argoed,
Norfolk, George Nelthorpe, of Lynford,
Northamptonſhire, Valentine Knightley, of Fawſley,
Northumberland, Cuthbert Shaftoe, of Baſington,
Nottinghamſhire, Jonas Bettiſon, of Holme-Pierrepont,
Oxfordſhire, Strickland Freeman, of Henley-upon-Thames, eſqrs.
Rutlandſhire, Sir Gilbert Heathcote, of Normanton, bart.
Shropſhire. Poſtponed.
Somerſetſhire. Poſtponed.
Southampton, Wither Bramſton, of Oakley-hall,
Staffordſhire, Thomas Swinnerton, of Butterton,
Suffolk, Jacob Whitbread, of Loudham,

Surry, Thomas Turton, of Starborough Caſtle,
Suſſex, Francis Newberry, of Heathfield Park,
Warwickſhire, Francis Holyoake, of Alne,
Wiltſhire, James Mountague, of Alderton,
Worceſterſhire, William Waldron, of Stourbridge, eſqrs.
Yorkſhire. Poſtponed.

SOUTH WALES.

Brecon, Henry Skreen, of Danby Park,
Cardigan, James Lloyd, of Mabus,
Carmarthen, John Rees, of Kilymaenllwyd,
Glamorgan, Wyndham Lewis, of Lanifhen,
Pembroke, John Herbert Foley, of Ridgeway,
Radnor, Thomas Grove, of Cwmtoyddwr, eſqrs.

NORTH WALES.

Angleſey, John Bulkeley, of Preſaddfed,
Carnarvon, William Lloyd, of Penmachno,
Denbighſhire, John Wynne, of Gorwenvawr,
Flint, Bromfield Foulkes, of Gwern y gron,
Merioneth, Robert Lloyd, of Cefngoed,
Montgomery, Lawton Parry, of Welch Pool, eſqrs.

HISTORICAL CHRONICLE.

JANUARY 29.

THIS day his excellency the Turkiſh ambaſſador made his public entry. The ambaſſador and his ſuite, after breakfaſting with ſir G. Howard at Chelſea hoſpital, came to town in grand proceſſion; the coach in which he rode was that uſed by the king in going to St. Paul's cathedral; there were ſix other carriages, all with ſix horſes; the ſtate horſes were ſix in number, very richly capariſoned, four of them were thoſe ſent as a preſent to the king from the grand ſeignor; the other two having died on their paſſage, were ſupplied by two from the king's ſtud. The ambaſſador wore a green robe, and turban nearly of the ſame colour, ſtudded with jewels.

Each of the carriages were drawn by ſix horſes, decorated with ribbonds, and attended by three ſervants in their court liveries.

The ambaſſador addreſſed himſelf to the king in the language of his country, which was tranſlated by Mr. Parſiani, the drogoman; and the ſame ceremony was repeated to the queen.

On Tueſday night the town of Manchester was alarmed by one of the moſt terrific fires that has been ſeen there. From ſome unknown accident, the ſpinning factory in Oak-ſtreet, the property of Meſſrs. Duck and Potts, took fire, and was beyond the power of every effort to extinguiſh it. The building ſtood very high, and from the ground to the room was one blaze, burſting out from all the windows; the whole town was illumined by it. The alarm was given about nine o'clock, and thouſands of people crowded to the place, who could only be ſpectators of the calamity. The factory did not join any other building, though not far removed from a great number; and providentially the evening was calm, or much greater miſchief might have enſued. It was with the utmoſt difficulty that thoſe houſes neareſt to the factory could be preſerved. The blaze was tremendous, and when a great part of the wall fell, the craſh and additional burſt of fire ſeemed to electrify the ſpectators. By eleven o'clock the building was a ruin.

A Copy of the addreſs preſented yeſterday to his majeſty, on the throne, by the lord mayor, &c. &c.

To the King's Moſt Excellent Majeſty.

The humble Addreſs of the Lord Mayor, Aldermen, and Commons of the City of London, in Common Council aſſembled.

Moſt Gracious Sovereign,

We your majeſty's moſt dutiful and loyal ſubjects, the lord mayor, aldermen, and commons of the city of London, in common council aſſembled, humbly approach the throne with renewed profeſſions of firm and unſhaken attachment to your majeſty and royal family, and full determination to ſupport our moſt excellent conſtitution in church and ſtate, againſt all ſuch attempts as have lately been made to ſubvert it.

With the deepeſt concern, we have beheld, that notwithſtanding the uniform bravery manifeſted throughout your majeſty's fleets and armies, the objects of the juſt and neceſſary war, in which this country is engaged, have not yet been accompliſhed.

But at the ſame time, with the ſteadieſt confidence on the God of all victory, we rely for the final ſucceſs of your majeſty's

arms; to ſecure to theſe kingdoms the permanent enjoyment of ſocial order, freedom, and every other bleſſing which we experience under your majeſty's mild and paternal government, and the glorious conſtitution, as eſtabliſh-d at the revolution.

Your majeſty's uniform and benevolent concern for the intereſts of your people, will go before our wiſhes, that your majeſty will employ every means which ſhall be moſt proper to defend this country againſt its foreign and domeſtic enemies; and to reſtore to us the bleſſings of peace, whenever it can be done, conſiſtently with the honour and dignity of the ſtate; and with that permanent ſecurity which is, above all things, important to the maintenance of our trade, commerce, and proſperity.

Your majeſty may be aſſured of the warm and uniform ſupport of your faithful citizens of London, in your majeſty's exertions toward this deſirable end; convinced, as we are, that on this event alone depends the exiſtence of all good government, ſecurity, law, and religion.

The following is the anſwer his majeſty was pleaſed to make to the addreſs preſented to him at St. James' by the lord-mayor and corporation of London.

'I receive with the greateſt pleaſure this mark of your attachment to my perſon and family, and to the conſtitution of the kingdom, as by law eſtabliſhed.

'The aſſurance expreſſed by my loyal city of London to ſupport my exertions in the preſent juſt and neceſſary war, for the permanent ſecurity and honour of my people, cannot but be highly ſatisfactory to me.'

JANUARY 30.

Yeſterday were executed, oppoſite Newgate, Patrick Murphy for a rape; Joſeph Strutt, for riotouſly beginning to pull down a houſe; and Francis Roſs, for forgery. *See page 76.*

The ſame day, the judges met in lord Kenyon's chamber, Weſtminſter-hall, when they choſe their circuits for the Lent aſſizes.

Northern. Lord Kenyon; Mr. juſtice Heath.

Norfolk. Lord chief-juſtice Eyre; Mr. baron Perryn.

Midland. Lord chief-baron Macdonald; Mr. juſtice Rooke.

Home. Mr. juſtice Aſhhurſt, Mr. baron Hotham.

Weſtern. Mr. juſtice Buller; Mr. juſtice Lawrence.

Oxford. Mr. juſtice Groſe; hon. Mr. baron Thomſon.

Caermarthen. John Lloyd, eſq. William Grant, eſq.

Cheſter. Hon. Edward Bearcroft, Francis Burton, eſq.

JANUARY 31.

On Thurſday morning the lady of the rev. Mr. Wilby, of Boſton, in Lincolnſhire, lodging on the ſouth parade in Bath, reading a newſpaper as ſhe ſtood near the chimney, ſuddenly perceived her clothes were on fire. She pulled both the handles of the bell with ſuch violence that the wires broke. Unfortunately, her ſervant being out, the ſummons was not anſwered. She then had the preſence of mind to fall on the carpet, and endeavoured to roll herſelf up in it, but it was nailed to the floor. As the laſt expedient, ſhe ruſhed in flames out of the room, and ran down the firſt flight of ſtairs, where, alarmed by her ſhrieks, aſſiſtance was given her, but too late: ſhe died on Sunday night, literally, though not immediately, burnt to death.

Edinburgh, Jan. 27. Four privates of the Breadalbane fencibles, who were ſentenced by a court-martial to be ſhot for mutiny, were this forenoon carried down to the ſea ſide, where ſentence was to be executed upon them. Detachments from the royal artillery, Sutherland fencibles, the third Scotch brigade, the 4th dragoons, and the Fifeſhire and Mid-Lothian cavalry, attended them, as likewiſe a part of the Breadalbane fencibles. The priſoners conducted themſelves in a very penitent and reſigned manner. After they had been prepared, and the ſentence was about to be executed, pardon was announced to three of them, and only one was ſhot.

The ſcene was ſolemn and affecting, and ſeemed to have a due impreſſion upon all the military preſent, as well as a vaſt concourſe of ſpectators.

FEBRUARY 3.

The preciſe value of the St. Jago Spaniſh regiſter ſhip, retaken in April 1793, from the French, which the lords of appeal adjudged to the captors on Thurſday evening laſt, is 935,000l. The perſons intereſted in this deciſion are rear-admiral John Gell, eſq. who commanded the ſquadron, and the captains, officers, and crews of the St. George, of 98 guns, Egmont, Edgar, and Ganges of 74, and Phaeton frigate, of 38 guns, which laſt conveyed her ſafe to Portſmouth.

FEBRUARY 7.

Mr. Pinckney, the American miniſter at our court, has written the following letter to Mr. Johnſon, the American conſul:

Great Cumberland Place, Jan. 30.

Sir,

Mr. Munro, our miniſter plenipotentiary in France, informs me in a letter dated at Paris, Jan. 7, 1795, that the convention have agreed to carry into full effect the treaty of commerce between the two republics. As this is, I preſume, the moſt authentic information which has been received of this determination, I have thought it proper to communicate it to you officially, for the information of our commercial friends. I am, with reſpect, &c.

THOMAS PINCKNEY.

Joſhua Johnſon, Eſq.

FEBRUARY 9.

This day, James Roach, bookſeller, was called up to receive the judgment of the court of King's bench, for having publiſhed an infamous pamphlet, entitled Harris' liſt of Covent garden Ladies. Mr. juſtice Aſhhurſt obſerved, that an offence of greater enormity could hardly be committed. A care of the growing morals of the preſent generation ought to be uppermoſt in every man's heart. The only circumſtance of mitigation in the preſent caſe was, that the defendant had the decency to let judgment go by default. It had been ſtated that he was a married man, and had a wife and ſix children. That circumſtance ought to have been conſidered by him before he committed this offence. The court, after taking all the circumſtances of this caſe into conſideration, ordered that the defendant ſhould be impriſoned in Newgate, for the ſpace of twelve calendar months, and that at the expiration of that period, he ſhould give ſecurity for his good behaviour for three years, himſelf in 100l. and his ſecurities in 50l each, and that he ſhould be impriſoned until ſuch ſecurity be given.

FEBRUARY 12.

The earl of Abingdon was brought before the court of king's bench, to receive ſentence for a libel of which he had been found guilty, againſt Mr. Thomas Sermon, who had been his lordſhip's attorney; which libel was contained in a ſpeech delivered by his lordſhip in the houſe of peers, on the laſt day of the laſt ſeſſion of parliament, and afterward publiſhed, by his direction, in certain newſpapers. The ſentence of the court adjudged his lordſhip to pay a fine of 100l. to the king; to be impriſoned for three calendar months in his majeſty's gaol of the king's bench; and his lordſhip to find ſecurity for his good behaviour for one year, himſelf in 200l. and two ſureties in 100l. each, and to be impriſoned till ſuch fine be paid, and ſuch ſureties found.

FEBRUARY 13.

Advices have been received, that a French ſquadron arrived in September laſt, in the river of Sierra Leone, deſtroyed the ſettlement there, and captured ſeveral of the company's ſhips, and, on Wedneſday capt. Telford arrived at the Sierra Leone houſe with diſpatches from that colony, dated the 28th of November. The French ſquadron remained about 15 days in the river. They captured and pillaged the factory at Bance Iſland. When they were on the point of departing, they put on ſhore about 120 Britiſh ſailors, moſt of them extremely ſick, who had been taken from different ſhips captured on the coaſt; and having deſtroyed or carried off all the company's ſtores and proviſions, except a ſupply of about three weeks for the ſailors left on ſhore, they ſet ſail to the ſouthward.

The diſtreſſes of the colony were extremely great on the eve of their departure, the ſeaſon being at that time remarkably ſickly, and all the medicines having been carried away or deſtroyed. Of the ſailors who were landed, about 80 periſhed for want of proper accommodation, as well as medicine and ſuſtenance. The Nova Scotia ſettlers, however, ſuffered little: though many of the company's ſervants ſuffered much in their health from ill treatment and expoſure, only two or three of them have died. The governor and council mention that their diſtreſſes had much abated a few weeks after the departure of the French ſquadron; that a veſſel alſo had arrived from England, which had furniſhed them with many neceſſary articles, and that a ſufficient ſupply of rice was then in the colony: that the health of the company's ſervants was improving, and that at the time when they were ſtripped of their arms and ammunition, and every other neceſſary, no want of order had prevailed. They were in full expectation, that if the company ſhould ſend them out the proper ſupplies, the colony would recover this miſfortune. The Nova Scotian ſettlers being all on the land, which proved more fruitful than was expected, they were able to ſupport themſelves, and they had a quantity of ſtock on their farms.

The French ſquadron appears to have been piloted and aſſiſted by ſome American ſlave traders.

FEBRUARY 16.

Government have ordered proper ſteps to be taken by the officers of the mint, for proſecuting and bringing to punihment thoſe who iſſue pieces of copper with devices of any kind ſtampt thereon, to ſerve in circulation as halfpence or farthings. Birmingham has teemed with the manufacture of theſe articles for ſome time paſt.

FEBRUARY 17.

On Saturday, an account was received at Portſmouth, that the Inconſtant of 36 guns, captain Montgomery, being on a cruiſe in the Mediterranean, had fallen in with two French frigates, both of which ſhe engaged, one of them was taken, and the other ſunk. Captain Montgomery loſt one of his legs in this gallant action, but is in a fair way of recovery.

The following is a copy of the circular letter from the ſecretary at war, announcing the appointment of the duke of York to ſucceed lord Amherſt:

Sir, War-Office, Feb. 13, 1795.

'It being his majeſty's intention that all matters reſpecting his military ſervice, which are to be tranſacted at home, excepting what relates to the foot-guards, ſhall paſs through the hands of field-marſhal his royal highneſs the duke of York, whom his majeſty has placed as a field-marſhal on the ſtaff, I have the honour, by his majeſty's command, to acquaint you therewith, that you may be pleaſed to ſignify the ſame to the corps under your command, and direct your officers to govern themſelves accordingly. I have the honour to be, &c.

W. WINDHAM.

FEBRUARY 18.

The preſident of the United States of America, by proclamation, has ſet apart Thurſday the 19th day of February, as a day of public thankſgiving and prayer; requiring every denomination of citizens to reverence it accordingly.

A letter from Philadelphia, dated Dec. 27, ſays, 'About eight o'clock laſt evening the German Lutheran church, (corner of Fourth ſtreet and Cherry alley) was diſcovered to be on fire, and after burning near four hours, this immenſe and elegant building was entirely conſumed. No houſes being immediately contiguous to it, the citizens, by the greateſt exertions of induſtry and activity, were enabled to ſtop the further ravages of the deſtructive element. This church was one of the moſt ſplendid in the Union, and was ſuppoſed to be worth 15,000l.

The New York Diary of January 8, has the following article: 'Accounts are received by a gentleman in this city of the loſs of the Thetis frigate, capt. Cockrane, in a gale of wind, about 40 miles to the ſouthward of Cape Henry. The officers and men are all ſaved, and a principal part of the ſtores; but the veſſel is loſt.

FEBRUARY 19.

Vice admiral Caldwell, commander in chief of the Leeward Iſlands, has promoted firſt lieutenant William Watkins, and ſecond lieutenant David Milne, of the Blanche frigate, to the rank of maſter and commander, which appointment the board of admiralty are expected to confirm.

A very melancholy accident happened one day laſt week. As miſs Ord, of Queen-Anne-ſtreet, was ſtanding with her back to the fire, her cloaths caught fire, which ſoon communicated to her head-dreſs. She rang the bell, but the ſervant who attended, had not the preſence of mind to roll her in the carpet, but conducted her into the hall; opened the ſtreet-door, and called for aſſiſtance. Some perſons coming by, got the lady into the ſtreet, and attempted to roll her in the ſnow; but it was the coachman of lady Sommers who put out the flames effectually, by wrapping his great coat round her.—Miſs Ord is ſince dead.

A veſſel which ſailed from Jamaica on the 8th ult. has brought an account of the mulattos of Cayes, in St. Domingo, having formed a deſign to maſſacre the commandant, the garriſon, and the whites of Jeremie; that the plot, which was to have been executed on the 9th of December, was diſcovered on the 4th; and that 50 negroes, who were concerned in it, were immediately ſhot.

The Jamaica planters cauſed the ſailing of the packet to be delayed for ſome days, in order to have time to prepare and ſend by the mail an addreſs to the king, repreſenting to his majeſty, that if the Brigands' banditti ſhould compel our troops to evacuate St. Domingo, they will immediately form ſome enterpriſe againſt Jamaica; that there is not at preſent a ſufficient force in the iſland for its defence, eſpecially as it is to be feared that the influence of French principles may direct the conduct of the negroes. They have therefore requeſted ſpeedy ſuccours.

FEBRUARY 20.

The committee for conducting the ſubſcription for the relief of wounded ſeamen, and of the families of thoſe who fell in the ſervice of their country, have carried the aid of this benevolent inſtitution to a conſiderable extent. They adminiſter-

to the ſupport of all naval ſufferers, from the officer downwards; making proviſion alſo for the relatives of the ſlain, in proportion to their various neceſſities, always providing by truſt, that their widows may not ſuffer by indiſcreet alienations. The books of this excellent inſtitution are a correct alphabetical regiſter of the ſhips of the Britiſh navy, in which are claſſed the name and diſtinction of the perſon relieved, the ſum or ſums ſo applied, the action in which he ſuffered, together with a certified ſtatement of every wound he received, the whole forming a mournful journal of our ſeamen's ſufferings, combined with the pleaſing recital of the active and liberal exertions made for their ſuccour. This fund has fortunately been found adequate alſo to the purpoſe of paying an honorary tribute to thoſe gallant commanders who have ſeverely ſuffered in the ſervice; for the committee have laudably voted a pair of elegant goblets, value five hundred guineas, to rear admiral ſir George Bowyer, and rear admiral ſir Thomas Paiſley, each of whom loſt a leg in ſupport of the Britiſh flag on the memorable 1ſt of June. The country is thus indebted to a body of private gentlemen, for this great aid to the public ſervice, and the benevolent ſyſtre which it reflects on the national character.

FEBRUARY 21.

Additional Inſtruction of our Ships of War and Privateers, that have or may have Letters of Marque againſt France.

Given at our Court at St. James's, the 9th day of February 1795, in the 35th year of our reign.

GEORGE R.

I. That they ſhall bring into the ports of this kingdom all Dutch veſſels bound to, or from, any ports in Holland, in order that they, together with their cargoes, being Dutch property, may be detained proviſionally; and that ſpeedy reſtitution ſhall be made of all ſuch cargoes, or parts of cargoes (or the value thereof) found on board the ſame, as ſhall appear to belong to proprietors being the ſubjects of allied or neutral powers.

II. That they ſhall bring into the ports of this kingdom all ſhips, to whatever country they may belong, which ſhall be found laden with naval or military ſtores, and bound to any port in Holland, in order that the ſaid cargoes may be detained proviſionally; a full indemnification being given by our government to the owners and maſters of all ſuch veſſels, belonging to the ſubjects of the allied or neutral powers, as may be brought in, in conſequence hereof, and likewiſe to the proprietors of ſuch cargoes, being ſubjects of allied or neutral powers.

By his majeſty's command,
PORTLAND.

FEBRUARY 22.

On Thurſday, the celebrated major Liſle, otherwiſe Semple, was convicted of a felony in the ſhop of Mr. Wattleſworth, linen draper, in Wigmore ſtreet. He is ordered to be tranſported for ſeven years.

FEBRUARY 24.

Accounts from all parts of the kingdom contain the moſt diſaſtrous recitals of the vaſt damages done by the late great and ſudden thaw. Bridges carried away, the roads impaſſable, carriages loſt, and hundreds of acres drowned, particularly in the fenny countries, are ſo numerous, that it is impoſſible, within our limits, to give the reader any idea of them.

On Thurſday laſt, an action for an aſſault was tried in the court of common-pleas, before lord chief juſtice Eyre, brought by a ſailor againſt captain Hall, of the Worceſter Eaſt Indiaman. The ſailor had, during captain Hall's laſt voyage, been guilty of repeated diſobedience of orders; and at laſt, on being called to his duty one day, not only refuſed to obey, but ſtruck his ſuperior officer, the boatſwain; who accordingly complained to the captain.—It appeared that captain Hall had repeatedly, in the mildeſt and moſt temperate manner, reaſoned with his crew on the neceſſity of ſubordination, to the preſervation of the valuable ſhip and cargo under his care. The plaintiff, however, and ſome others, ſeemed determined to be refractory; and as no apology or promiſe of amendment was made, he was, with great reluctance on the part of the captain, ordered to the maſt, and received the chaſtiſement due to his offence. For this he brought his action, and the above circumſtances appeared in evidence.—The learned judge, in ſumming up, paid many compliments to captain Hall, for the juſtice of his conduct, not only in preſerving the neceſſary ſubordination, but for the gentle manner by which he had endeavoured, if poſſible, to prevent the neceſſity of puniſhment. The jury, without heſitation, gave a verdict for the defendant, the captain.

Perhaps the neceſſity of regularity and obedience is more peculiarly forcible on

board the East India ships, than in any other department of the navy. The loss of the Halsewell, it is but too notorious, was occasioned solely by a defect in this particular.

On Friday, an indictment was tried before lord Kenyon on the prosecution of lord Faulkland and one King, against a man of the name of Gillum, for taking, in the character of a money broker, more than ten shillings for every 100l. contrary to the statute.

Gillum had procured for lord Faulkland, Mr. Delves Broughton, and Mr. Speed, the sum of 2,450l. for which three gentlemen granted three annuities, two of 125l. a year each, and the third of 100l. a year; and Mr. Gillum was charged with having taken the sum of 322l. 10s. for his trouble in this business.

The trial lasted upward of eight hours. The jury found the defendant guilty.

FEBRUARY 25.

The following are the new taxes, as stated in the house of commons by Mr. Pitt, at the opening of the budget, on Monday:

Wines 20l. per tun	£500,000
Foreign Spirits 10d, Rum 8d, Home made Spirits 1d per gall.	259,000
Tea 7l. 10s. per cent	180,000.
Coffee and Cocoa	40,000
Insurances on Shipping and Lives	160,000
Raisins, Lemons, Oranges, Salad Oil, Silk, and Rock Salt	52,000
Coals exported	25,000
Deals and Fir timber	110,000
Stamps on Affidavits, Writs, Probates of Wills, *an additional* Tax on Receipts for above 100l.	68,000
Regulation of Franks	40,000
Licence for every person wearing Hair Powder at 1l. 1s. a year	210,000
	£1,644,000

BIRTHS.

LADY of the hon. Mr. Dundas, a son and heir.

Lady Auckland, a son.

MARRIAGES.

FRancis lord Down, son of the earl of Moray, to miss Lucy Scott, daughter of the late general Scott.

Earl of Barrymore, to miss Coghlan, daughter of Mr. Coghlan, of Ardo, in the county of Waterford.

Hon. Simon Butler, to miss Lynch, daughter of Edward Lynch, esq. of Hampstead.

Hon. Edward Massey, second son of the late lord Massey,, to miss Villiers, daughter of John Villiers, esq. of Limerick.

Rev. George Trevalyan, son of sir John Trevalyan, bart. to miss Neave, daughter of Richard Neave, esq. of Dagnam Park, Essex.

DEATHS.

LADY Vane, relict of the rev. sir Henry Vane, bart.

Countess dowager of Carlisle.

Edwin lord Harewood, the title extinct.

Sir John Hynde Cotton, bart.

Hon. miss Fitzroy, eldest daughter of lord Southampton.

Lieutenant-general Douglas, colonel of the 99th regiment of foot.

Sir John Duntze, bart. M. P.

Sir James Langham, bart.

Richard Edwards, esq. admiral of the blue.

George earl of Mount Edgcumbe.

John Webb, esq. M. P.

Thomas earl of Macclesfield.

Thomas Grosvenor, esq. M. P. brother to earl Grosvenor.

Margaret baroness of Cloncurry.

John Sawbridge, esq. alderman and M. P. for London.

PROMOTIONS.

JOhn earl of Portarlington and George lord Milton—Privy-counsellors of Ireland.

Robert Shore Milnes, esq.—Governor of Martinique.

Dr. William Newcombe, bishop of Waterford—Archbishop of Armagh.

Rev. Thomas Lewis O'Berne—Bishop of Ossory.

Hon. Charles Lawrence Dundas—Private secretary to the lord lieutenant.

Rev. Dr. Richard Murray—Provost of Trinity College, Dublin.

General the duke of York—Field-marshal of the forces.

BANKRUPTS. From the GAZETTE.

JANUARY 27.

JOnathan Pratt, of Portland-street, Marybone, plasterer.

John Gould, of Candwell, in Leicestershire, sheep-jobber.

Horatio Stevens, of Birmingham, grocer.

John Scott, of Wells, in Somerſetſhire, victualler.

John Hall, of Worceſter, porter-brewer.

Walter Haynes, of Worceſter, porter-brewer.

Samuel Haynes, of Worceſter, porter-brewer.

JANUARY 31.

John Buſh, of Shepherd's Market, May-fair, painter.

William Maclean, of Goſport, Hants, ſlopſeller.

John Mort, of Fore-ſtreet, London, callenderer.

William Maſley, of Market Drayton, in Salop, ſhopkeeper.

John Healy, of Manchester, watch-maker.

Thomas Skenfield, of Briſtol, timber-dealer.

FEBRUARY 3.

Mary Eliſabeth Churchill, of Bath, milliner.

John Langwith, of Grantham, in Lincolnſhire, builder.

Stephen Seager, of Birmingham, grocer.

Joſeph Cave, of Wakcot, in Somerſetſhire, carpenter.

Robert Frederic Eagle King, of Little Clacton, in Eſſex, brickmaker.

FEBRUARY 7.

George Careleſs, of King's-head Inn Yard, in the Borough High-ſtreet, corn-factor.

Bryant Hooper, of Upper Titchfield-ſtreet, Marybone, taylor.

William Henſh w, of Liverpool, coach-owner.

William Lovatt, of New Mills, in Oxfordſhire, paper-maker.

William Foſter, of Old Bond-ſtreet, victualler.

John Jelly, of Bath, money-ſcrivener.

William Cairncroſs, of Ship-yard, Wardour-ſtreet, Soho, cabinet-maker.

Thomas Gouldſmith, of Duke's-court, St. Martin's-lane, hoſier.

John Gamble, of Willoughby Waterleſs, Leiceſterſhire, money ſcrivener.

William Rogers, of Kingſwinford, in Staffordſhire, corn-chandler.

Edward Wheeldon, of Hartington, in Derbyſhire, dealer.

FEBRUARY 10.

Thomas Camm, of Dudley, in Worceſterſhire, victualler.

William Harris, of Birmingham, button-maker.

Stafford Gill, of Lambeth-marſh, dealer in horſes.

FEBRUARY 14.

Joſeph Grimwood, of Bury St. Edmund's, in Suffolk, innholder.

John King, of Newcaſtle, in Staffordſhire, liquor-merchant.

Adam Scott and John Robſon, of Maid-lane, Southwark, brewers.

William Gough, of Kingſwood, Wilts, maltſter.

John Gregory, of Frome Selwood, in Somerſetſhire, collar-maker.

Robert Remington, of Maidſtone, in Kent, ſhoemaker.

John Gilman, of Pitfield-ſtreet, Hoxton, money-ſcrivener.

Thomas Elwell, of Walmer-lane, in Birmingham, coal-merchant.

John Cole, of Chippenham, in Wilts, hatter.

Charles Rathbone, of Manchester, timber-merchant.

William Faulkner and George Faulkner, of Manchester, cotton-ſpinners.

Joſeph Lowe, of Cheſter, breeches-maker.

Charles Northbroke, of Piccadilly, ſtable-keeper.

Ebenezer John Lyddal, of Bunhill-row, money-ſcrivener.

FEBRUARY 17.

Thomas Holland, of New South End, Eſſex, builder.

Robert Poulden, of John-ſtreet, Oxford-ſtreet, dealer in porter.

John Hawkes, of Yardley, in Worceſterſhire, dealer in cattle.

Thomas Wyer, of Ilkeſton, in Derbyſhire, ſhopkeeper.

William Holt, of Tottenham, apothecary.

Joſeph Cotterell, of Walſall, Staffordſhire, linen-draper.

William Rutherford, of Wooller, in Northumberland, jobber.

Thomas Parke, of Hatton-wall, timber-merchant.

FEBRUARY 21.

John Williams, of Nightingale-lane, ſlopſeller.

Walter Vaughan, of Drury-lane, butcher.

William Rees, and Henry Borradaile, of Bucklerſbury, drapers.

William Withers, of Cannon-ſtreet, upholſterer.

John Tripp, of Dartmouth-ſtreet, Weſtminſter, victualler.

Peter Tyler, of Ancaſter, in Lincolnſhire, builder.

William York, of Melford, in Suffolk, innholder.

John Reader, of Pailton, in Warwickshire, victualler.

Charles Carne, of Helſtone, Cornwall, mercer.

George Vaſey, of Bath, hoſier.

FEBRUARY 24.

Gilbert Houghen, of London-ſtreet, Greenwich, perfumer.

George Warden, of the Strand, merchant.

John Emblin, of King-ſtreet, Weſtminſter, victualler.

Joſeph Dyke, of Birmingham, tin-plate-worker.

NEW PUBLICATIONS.

TRanſactions of the Royal Society of Edinburgh, vol. 3, 1l. 5s. boards.

Minutes of the Society for Philoſophical Experiments and Converſations, 8vo. 8s. boards.

Letters and Papers on Agriculture, &c. (Bath) vol. 7, 6s. boards.

Ferris' View of the Eſtabliſhment of Phyſic in England, 8vo. 3s. 6d. ſewed.

Voluntary Exiles, 5 vol. 12mo. 17s. 6d.

Holcroft's Narrative relative to a Proſecution for High Treaſon, 8vo. 3s. 6d. ſewed.

Selections from Sillery's Annals of Virtue, 8vo. 6s.

Monſigny's (Mrs.) Mythology, 12mo. 3s. 6d.

Cabal and Love, a Tragedy, 2s.

Whitaker's View of the Prophecies relating to the Gentiles, 12mo. 3s. 6d.

Scholar armed againſt Errors, or a Collection of Tracts on Chriſtianity, 2 vol. 8vo. 14s.

Bidlake's Sermons, 8vo. 6s.

Webb's Selections from M. Pauw, with Additions, ſmall 8vo. 5s.

Some Particulars of the Life of the late George Colman, Eſq. 2s.

Blue's Attic Nights of Aulus Gellius, Engliſh, with Notes, 3 vol. 8vo. 1l. 4s.

The Town before you, a Comedy, 2s.

Mercier's Fragments of Politics and Hiſtory, 2 vol. 8vo. 16s.

Euler's Letters to a German Princeſs, 2 vol. 8vo. 18s.

Hutton's Diſſertation on the Philoſophy of Light, Heat, and Fire, 8vo. 7s.

Mountaineers, a Play, 2s.

Hunter's Deſcription of the Human Gravid Uterus, by Baillie, 4to. 5s. ſewed.

Myſteries of the Caſtle, a Play, 2s.

AVERAGE PRICES OF CORN.

February 14, 1795.

By the Standard Wincheſter Quarter of Eight Buſhels.

INLAND COUNTIES.

	Wheat.		Rye.		Barley.		Oats.	
	s.	d.	s.	d.	s.	d.	s.	d.
Middleſex	61	10	—	—	34	0	25	4
Surry	64	0	36	0	35	6	28	0
Hertford	60	3	—	—	35	2	25	7
Bedford	01	3	—	—	33	0	24	6
Huntingdon	56	9	—	—	33	0	21	0
Northampton	59	2	45	0	32	0	22	4
Rutland	58	6	40	0	35	0	21	0
Leiceſter	60	8	47	10	36	0	23	3
Nottingham	61	6	45	0	38	11	23	4
Derby	60	6	—	—	40	4	25	3
Staffford	62	6	—	—	40	2	24	9
Salop	60	2	48	6	39	4	23	11
Hereford	58	0	44	10	38	7	24	4
Worceſter	62	6	—	—	39	1	30	4
Warwick	66	0	—	—	42	9	31	6
Wilts	55	8	—	—	35	4	26	2
Berks	60	0	—	—	33	0	25	0
Oxford	60	4	—	—	34	8	20	8
Bucks	59	0	—	—	33	0	24	0
Brecon	60	9	48	0	36	0	19	4
Montgomery	54	5	—	—	33	7	19	4
Radnor	59	0	—	—	33	7	21	5

MARITIME COUNTIES.

Eſſex	61	9	33	0	34	4	25	6
Kent	56	9	34	6	32	5	25	4
Suſſex	55	6	—	—	34	2	25	4
Suffolk	00	5	35	8	33	5	24	5
Cambridge	53	8	34	0	29	7	20	9
Norfolk	55	8	35	6	29	10	22	6
Lincoln	54	3	40	0	32	0	19	11
York	52	0	44	0	31	11	20	3
Durham	51	10	—	—	—	—	19	9
Northumberland	49	1	36	10	28	2	19	2
Cumberland	54	2	44	8	28	10	18	6
Weſtmorland	57	1	44	0	31	10	20	3
Lancaſter	59	8	—	—	38	5	21	3
Cheſter	58	6	—	—	38	10	23	2
Flint	64	0	—	—	41	7	20	9
Denbigh	61	6	—	—	41	8	17	11
Angleſea	—	—	—	—	32	0	16	0
Carnarvon	55	6	44	0	35	8	17	10
Merioneth	02	9	46	11	30	0	17	7
Cardigan	54	10	—	—	28	2	15	11
Pembroke	45	6	—	—	31	0	14	8
Carmarthen	51	4	—	—	31	5	15	11
Glamorgan	02	1	—	—	34	10	18	8
Glouceſter	60	8	—	—	35	11	27	3
Somerſet	61	3	—	—	35	4	20	8
Monmouth	02	7	—	—	40	4	21	4
Devon	63	1	—	—	33	0	20	4
Cornwall	59	9	—	—	29	4	17	1
Dorſet	57	9	—	—	33	5	25	4
Hants	57	2	—	—	34	5	25	12

Peck Loaf, 2s. 11d.

PRICES of STOCKS, from JANUARY 28, to FEBRUARY 25, 1795, both inclusive.

By ANTHONY CLARKE, Stock-Broker, No. 13, Sweeting's-Alley, Cornhill.

Days	Bank Stock.	3 per C. reduced.	3 per C. consols.	4 per C. consols.	5 per C. consols.	Long Ans.	Short Ans.	India Stock.	India Bonds.	South Sea Stock.	Old Ann.	New Ann.	Navy Bills.	English Lot. Tic.
28	152 ½	64 ¾	63⅛a62¾	79 ⅝	96 ⅛	18 ¼	8 ⅞	—	6s.pr.	—	—	—	2⅛dis.	20 1 0
29	153	64 ⅜	62⅞a⅝	79 ½	96 ⅛	18 ¼	8 ⅞	182 ¾	7	—	—	—	2 ¼	20 2 6
30	—	—	—	—	—	—	—	—	—	—	—	—	—	—
31	153 ½	64	62⅞a⅝	79 ⅛	96 ¼	18 ¼	8 ⅞	182 ¾	7	—	—	—	2 ⅛	20 0 6
2	153	—	62⅞a¾	—	—	—	—	183	7	—	—	—	2 ¼	19 18 0
3	153	64	62⅞a63	79 ⅜	96 ⅛	18 ¼	8 ⅞	183 ¼	7	—	—	—	2 ¼	19 17 0
4	152 ⅝	64	62¾a63	79 ⅜	96 ¾	18 ⅜	8 ⅞	183 ¾	6	—	—	—	2 ⅛	19 17 0
5	—	64 ¼	63a¼	79 ¾	96 ⅞	18 ½	8 ⅞	184 ¼	6	66	—	—	2 ¼	19 18 0
6	153 ¼	64 ⅜	63a62⅝	79 ¾	96 ⅞	18 ½	8 ⅞	—	6	—	—	—	2 ¼	19 18 0
7	—	64	62⅞a¾	79 ¾	96 ¼	18 ½	8 ⅞	183 ¼	8	—	—	—	2 ¼	19 10 6
9	153 ¼	—	62⅞a⅞	79 ⅝	96 ⅞	18 ¼	9	184	—	—	—	—	2 ⅛	19 19 0
10	153 ⅝	64 ⅛	62⅞a⅝	79 ⅝	96 ⅞	18 ½	9	184	9	—	—	—	2 ¼	19 14 0
11	—	63 ¾	62½a⅝	79 ¼	96 ¼	18 ⅜	8 ⅞	183 ¼	11	—	—	—	2 ⅛	19 1 6
12	152 ¾	63 ½	62⅛a62	79 ⅜	96 ¼	18 ⅜	—	183 ¾	10	—	—	—	2 ¼	19 3 0
13	152 ⅞	63 ¾	62a¼	79 ⅜	96 ¾	18 ⅜	8 ⅞	—	10	—	—	—	2 ⅛	19 8 0
14	—	—	62⅛a62	79 ⅜	—	18 ½	8 ⅞	183	10	—	—	—	2 ¼	18 11 0
16	152	63 ¼	62⅛a61⅞	79 ⅜	96 ¼	18 ½	8 ⅞	—	10	—	62 ¾	—	2 ¼	—
17	152 ⅛	63	61⅞a¾	79 ⅜	96 ¼	18 ⅜	8 ⅞	181 ½	10	—	—	—	2 ⅛	—
18	—	—	—	—	—	—	—	—	—	—	—	—	—	—
19	151 ⅝	62 ⅝	61⅝a¼	79 ⅜	96 ⅛	18 ¼	8 ⅞	—	10	—	—	—	2 ⅛	—
20	—	62 ½	61½a⅝	79 ¼	96	18 ¼	8 ⅞	180 ¾	9	—	—	—	2 ⅛	—
21	—	63	61⅜a¼	79 ¼	9[illegible]	18 ⅜	8 ⅞	181 ¾	—	—	—	—	2 ⅛	—
23	—	62 ⅞	61½a62⅛	79 ¼	95	18 ⅜	8 ⅞	182	4	—	—	—	2 ¼	—
24	—	63	62a61¾	—	—	—	—	182	4	—	—	—	2 ¼	—
25	—	—	—	—	—	—	—	—	—	—	—	—	—	—

☞ In the 3 per Cent. consols. the highest and lowest Price of each Day is given; in every other Article the highest Price only, the Long and Short Annuities excepted, which are given within a sixteenth of the highest Price. In the different Funds that are shut, the Prices are given with the Dividend till the Days of Opening.

Sir HANS SLOANE, Bart

PARTICULARS *of the* LIFE *of Sir* HANS SLOANE, *Bart. With a fine Portrait of that celebrated Phyſician and Naturaliſt.*

It has been more than once intimated to us, by ſome ſcientific Friends, that in a Work which contains ſo many Hundred Portraits of celebrated Men, that of a Character ſo illuſtrious as Sir Hans Sloane, *is wanting. This Deficiency we have taken the earlieſt Opportunity to ſupply, and here preſent our Readers with ſome Particulars of his Life, referring, for more copious Memoirs, to our Magazine for Auguſt 1763.*

SIR Hans Sloane, an eminent phyſician and naturaliſt, and the founder of the Britiſh Muſeum, was born at Killileagh, in the county of Down, and province of Ulſter, in Ireland, on the 16th of April 1660; his father, Alexander Sloane, being then at the head of that colony of Scots, which king James the firſt ſettled in the north of that kingdom. The very firſt bent of his genius diſcovered itſelf toward the knowledge of nature, and this was encouraged by a proper education. He choſe phyſic for his profeſſion; and in order to attain a perfect knowledge of the ſeveral branches of it, repaired to London. Here he attended all the public lectures of anatomy, botany, and chymiſtry. His turn to natural hiſtory introduced him to the acquaintance of Boyle and Ray; which he carefully cultivated, by communicating to them every curious or uſeful obſervation which he made. Having ſpent four years in London, he went to Paris; and there attended the hoſpitals, heard the lectures of Tournefort the botaniſt, of Du Verney the anatomiſt, and other eminent maſters. Having obtained letters of recommendation from Tournefort, he went to Montpellier; and was introduced by Mr. Chirac, then chancellor and profeſſor of that univerſity, to all the learned men of the province, but particularly to Mr. Magnol, who introduced him to an acquaintance with the ſpontaneous productions of nature in that happy climate, and taught him to claſs them in their proper order. He ſpent a whole year in collecting plants in this place, and travelled through Languedoc with the ſame view. In 1684, he returned to London, with an intent to ſettle, and follow his profeſſion.

He immediately tranſmitted to Mr. Ray a great variety of plants and ſeeds, which Ray has deſcribed, with proper acknowledgements in his 'Hiſtoria Plantarum.' About this time, he became acquainted with Sydenham, who took him into his houſe, and recommended him in the warmeſt manner to practice; and ſhortly he was choſen a fellow of the Royal Society, and of the College of Phyſicians. But a proſpect of making new diſcoveries in natural productions induced him to take a voyage to Jamaica, as phyſician to Chriſtopher duke of Albemarle, then governor of that iſland. His whole ſtay at Jamaica was ſcarce fifteen months; yet he brought together ſuch a variety of plants as greatly ſurpriſed Mr. Ray, not thinking there had been ſo many to be found in both the Indies. He now applied himſelf cloſely to his profeſſion, and became ſo eminent, that he was choſen phyſician to Chriſt's hoſpital on the firſt vacancy. What is ſingular, he applied the money he received from his appointment to the relief of poor objects in the hoſpital, not being willing to enrich himſelf by the gains he made there. He was choſen ſecretary to the royal ſociety in 1693, and immediately revived the publication of the 'Philoſophical Tranſactions,' which had been omitted for ſome time: he continued to be editor of them, till 1712; and the volumes, which were

publiſhed in this period, contain many pieces written by himſelf. As he had from his earlieſt days a ſtrong appetite for natural knowledge, he had made a great collection of rarities, and enriched his cabinet with every thing that was curious in art or nature. But this received a great augmentation by a bequeſt of William Courten, eſq. a gentleman who had employed all his time, and the greateſt part of his fortune, in collecting curioſities. The ſenſe, which the public entertained of his merit, is evidently ſhewn by the following honours conferred upon him. He was created a baronet by George I, choſen a foreign member of the royal academy at Paris, preſident of the college of phyſicians, and preſident of the royal ſociety on the death of ſir Iſaac Newton. Having faithfully diſcharged the reſpective duties of the places he enjoyed, and anſwered the high opinion which the public had conceived of him, he retired, at the age of eighty, to Chelſea, to enjoy in a peaceful tranquillity the remains of a well-ſpent life. Here he continued to receive the viſits of people of diſtinction, and of all learned foreigners; and admittance was never refuſed to the poor, who came to conſult him concerning their health. At ſixteen, he had been ſeized with a ſpitting of blood, which confined him to his chamber for three years, and he was always more or leſs ſubject to it; yet, by his ſobriety, moderation, and an occaſional uſe of the bark, he protracted life beyond the common meaſure of humanity, without even feeling the infirmities of old age.

After a ſhort illneſs of three days, he died the 11th of January 1752, in his ninety-firſt year. In his perſon he was tall and well proportioned; in his manners, eaſy and engaging; and in his converſation, ſprightly and agreeable. He was every way a liberal benefactor to the poor. He was a governor of almoſt every hoſpital about London; to each he gave a hundred pounds in his life-time, and at his death a ſum more conſiderable. He laid the plan of a diſpenſatory, where the poor might be furniſhed with proper medicines at prime coſt; which, with the aſſiſtance of the college of phyſicians, was afterward carried into execution. He gave the company of the apothecaries the entire freehold of their botanical garden at Chelſea; in the centre of which a marble ſtatue of him is erected, admirably executed by Ryſbrack, and the likeneſs ſtriking. He did all he could to forward the eſtabliſhment of the colony in Georgia in 1732, of the Foundling-hoſpital in 1739, and formed the plan for the bringing up the children. He was the firſt in England, who introduced into general practice the uſe of the bark, not only in fevers, but in a variety of other diſtempers; particularly in nervous diſorders, in mortifications, and in violent hæmorrhages. His cabinet of curioſities, which he had taken ſo much pains to collect, he bequeathed to the public; on condition, that the ſum of 20,000l. ſhould be paid to his family; which ſum, though large, was not near half the original coſt, and ſcarce more than the intrinſic value of the gold and ſilver medals, the ores and precious ſtones, that were found in it. Beſide theſe, there was his library, conſiſting of more than 50,000 volumes; 347 of which were illuſtrated with cuts, finely engraven and coloured from nature; 3566 manuſcripts; and an infinite number of rare and curious books. The parliament accepted the bequeſt; and that magnificent ſtructure, called Montague Houſe, in Ruſſel-ſtreet, Bloomſbury, was purchaſed for their reception of this collection, as well as for that of the Cottonian library, and the Harleian manuſcripts; and thus ſir Hans Sloane became the founder of the Britiſh Muſeum, one of the nobleſt collections in the world. The wits, however, who never ſpare a character, however eminently great and uſeful, more than once took occaſion to ridicule this good man for a taſte, the utility of which they did not comprehend, but which was honoured

with the unanimous approbation of the British legislature. Thus Young, in his 'Love of Fame:'

But what an address can be more sublime
Than Sloane, the foremost *layman* of his time?
His nice ambition lies in curious fancies,
His daughter's portion a rich *shell* inhances,
And Ashmole's baby-house is in his view,
Britannia's golden mine, a rich Peru!
How his eyes languish! how his thoughts adore,
That painted coat which Joseph *never* wore!
He shews, on holidays, a sacred pin,
That touch'd the ruff, that touch'd queen Bess' chin.

Sat. IV. 113—122.

He published 'The Natural History of Jamaica,' in two vol. folio; the first in 1707, the second in 1725. This elaborate work, says Dr. Freind in his 'History of Physic,' greatly tends to the honour of our country, and the enriching of the 'Materia Medica.'

Sir Hans Sloane married, in 1695, Elisabeth, the daughter of alderman Langley of London, who died in 1724, after she had brought him one son, and three daughters, the youngest of which died also in her infancy. Sarah, the eldest, married George Stanley, esq. of Poultons, in Hampshire; and Elisabeth, the second, married lord Cadogan, colonel of the second troop of horse guards, and governor of Tilbury Fort.—Hans Town, Sloane-street, &c. near Chelsea, distinguish, by their names, the site of the family estate. A monument, to the memory of sir Hans Sloane, is placed over his grave, at the east end of Chelsea churchyard, next the river.

IT IS NOT WISE TO BE TOO HONEST.

To the Editor of the Universal Magazine.

Sir,

ALTHOUGH I am one of those beings to whose lot it seldom happens to have a taste for reading, and as seldom to have the means of indulging it, yet, as from what I have seen of your Magazine, which I have often been employed to fetch from the bookseller's, it appears to me that you have occasionally touched upon the conduct of servants toward their masters, I am in hopes that you will shew your impartiality by admitting a letter from one of the former, on the same subject. I do not mean to answer the many objections that have been made to the conduct of servants, because I know, from experience, that they are, in the main, well-founded, but I nevertheless have taken upon me to think that objections, where two parties are concerned in a necessary and important relationship, ought not to be all on one side. I mean, sir, humbly to say, that although servants are far from being without faults, masters have not yet arrived at perfection.

I think it necessary to premise, that at a time, when certain persons, for very wicked purposes, are endeavouring to stir up servants against masters, by persuading them that they are *equal*, you have nothing to fear on that score from what I have to advance. Nor do I mean, as I have already hinted, to enter into a defence of the idleness, slovenness, drunkenness, carelessness, &c. of servants. Wherever these occur, they ought to be censured. It is nothing to us that our masters are very often guilty of our faults, nor have we any business to visit the sins of the kitchen upon the parlour. When our duty is pointed out, all we have to do is to perform it to the best of our power, and with diligent attention. These are matters, therefore, which I shall touch upon as little as possible, my principal intention being to give you a sketch of the unfortunate cir-

cumſtances, which have obſtructed my progreſs in uſeful ſervitude.

I was born, ſir, as many of us ſay when we come to be hanged, of poor, but honeſt parents in the north of England, who gave me the beſt education they could afford: they taught me to read and write, and eſpecially the principles of religion, out of the bible, catechiſms, and other good books. The reaſon of their beſtowing ſo much pains and expence (for my ſchooling coſt a matter of ten ſhillings a year) was that a neighbouring gentleman had promiſed them that, as ſoon as my education was finiſhed, he would take me up to London as his own ſervant. When this happy time came, I accompanied him to the great city, and being a ſtranger, my only buſineſs was the domeſtic employments of his houſe, the chief of which was to open the door, and give anſwers, and to wait at table.

Theſe, perhaps, may ſeem eaſy: to carry a meſſage, or a glaſs of wine, does not appear to require much ſtrength of mind or body; yet, ſir, I loſt my firſt, and upon the whole my beſt place, becauſe I could do neither, as I was told, a ſervant ought to do. I have told you how I was educated; and it is neceſſary now to add, that there were ſome of the inſtructions of my youth, which ſtuck ſo cloſe to me that I could neither ſhake them off my own ſtrength, nor by all the perſuaſions and ridicule of my fellow ſervants. The chief of theſe were, never to tell a lie upon any account whatever, to be ſincere to every body, never to allow my maſter to be injured in any reſpect without informing him, and to go to church, if I could poſſibly find time, on Sundays. Now, ſir, my maſter, though a very rich man, and whoſe education I was informed had coſt more than five hundred pounds a year, was far from being remarkably tenacious of truth, and I firmly believe had never ſeen the inſide of a church ſince he buried the good old lady his mother.

My firſt diſobedience aroſe from a gentleman, a very particular friend of my maſter's, calling one day upon him. I immediately announced him to my maſter, who, to my great ſurpriſe, bid 'me tell him he was not at home.'—'Sir,' ſaid I, 'you are pleaſed to be jocular, how can I tell him you are not at home, when you are.'—'Blockhead!' replied my maſter, 'go, and do as I bid you,' and ſhut the room-door in my face.

What was I to do? I could never think of delivering a meſſage which, beſide its being a downright untruth, was too ridiculous for belief. I concluded that my maſter was inclined to be facetious at my expence, and I thought I could not carry on his joke better than by delivering the meſſage, with his *compliments* prefixed, which in all other meſſages, was a general order. But what was my aſtoniſhment, when the gentleman received this information with great good humour, and added, that he would ſee my maſter another time. This might be a very good joke, but totally beyond my comprehenſion. A few days, however, cleared up this matter. My maſter, ſending for me abruptly, aſked me what meſſage I had delivered to the above gentleman? I candidly told him.—'If you ever dare to take ſuch an impertinent liberty, you leave this houſe.'—I anſwered, 'that I certainly had taken a liberty, but it was upon his account as well as my own.'—Your buſineſs is to ſay no more than I give you to ſay.'—'But,' I replied, 'I thought that'—'*Thought!* ſuch fellows as you have no buſineſs with thinking—you are to do what you are bid, and no more.' N.B. At dinner this day, while I waited behind my maſter's chair, he told this ſtory to a large company, whoſe fits of laughter convinced me that they were not of my way of thinking.

But the lie in queſtion was not ſo eaſily got rid off, and by avoiding it, although I at firſt provoked my maſter's laughter, yet he at laſt in-

formed me that I muſt leave the houſe. 'John, you were a very honeſt fellow when I took you from home, but you are become a d—d canting hypocrite. I never knew much good of you church-going footmen: you will not do with me: I want one who will not diſgrace me by wilfully miſtating any meſſage I may chooſe to give.'—After profeſſing that I meant no diſreſpect to him, and that he would find I had in all things been a faithful ſervant, I told him that I hoped he would not take it amiſs that I refuſed to tell what was untrue; and I was about to have given many good reaſons for being ſo ſcrupulous, when he ordered me out of the room, and never to ſee him more.

This was poor encouragement for one who was brought up near three hundred miles, and I deſpaired, ſtranger as I was, of obtaining another ſervice, when my maſter ſent to tell me that a friend of his wanted a ſervant; that I might apply, and that he would give me a character. This latter he fulfilled beyond my wiſhes; inſtead of making any one objection, he gave as the reaſon of my leaving him, that I wiſhed for an eaſier ſervice. Lord, lord! thought I, how genteel it is to ſet plain truth at defiance.

My new ſervice proved not more propitious than my laſt—but as I had not the honour of being door-keeper, I eſcaped the fatality of polite denials; yet my unfortunate propenſities returned. I loved the man who gave me bread to eat and raiment to put on. My maſter was young, lively, generous, and eaſily pleaſed. But on the other hand he drank, ſwore, gamed, and wenched moſt abominably. I ſaw his health decaying, and I was told his fortune was alſo upon the decline. Fool that I was, not to ſee and hear all this with indifference. I took the liberty, one afternoon, when he was getting up, in a violent fever from the preceding day's debauch, to hint that he would ſoon kill himſelf by ſuch courſes. He good naturedly ſmiled, and told me I was a blockhead. On other occaſions, I repeated my leſſons; ſo good-natured a gentleman, I thought, might at length liſten; but I had made a wrong calculation, and inſtead of a *blockhead*, I was called 'a troubleſome, impertinent, canting raſcal,' and diſmiſſed at an hours warning.

Bad as I was, however, I had been guilty of no diſhoneſty, and my laſt maſter, in the warmeſt terms, recommended me to the ſervice of the ducheſs of —— Here, if any where, I might have lived tolerably happy; my chief duty being to attend the young ladies to the park, the play, or the auction-room. But I was ever doomed to differ from perſons of faſhion in the article of veracity. For one untruth to be told at my firſt maſter's door, I had ten to tell here in every room of the houſe. I became bewildered; words appeared to have loſt all meaning, and I went on in a ſeries of blunders, which brought my noble miſtreſs into many awkward ſcrapes. As this was imputed merely to ignorance, and as I took care to do every thing lawful with the greateſt care and circumſpection, there would probably have long been no reaſonable pretence for diſmiſſing me, had not an unfortunate affair happened, one day, which completed my diſgrace. You are to know that, ſuch was the effect of the pains taken with me when young, I never allowed any day to paſs without beſtowing a few minutes in reading my bible, or ſome good treatiſe. This kept my principles firm, and never interrupted my buſineſs; for as the riſing hours of our family were the lateſt in vogue, I had full time for my own amuſements or employments before moſt of the ſervants were ſtirring. One unlucky day, I had riſen earlier than uſual—the morning was fine; I opened the drawing-room windows, and enjoyed the perfume of early day. Here I happened to read a few verſes in my bible, and being interrupted by one

of the ſervants, together with a violent knocking at the door, I left my book on the ſofa, and forgot it.

In the courſe of that day, one of our young ladies, happening to go into the drawing-room, found the book. Curioſity, as I was afterward informed, induced her to peruſe many parts of it with attention. I know not whether a better or a worſe motive induced her to take it to her room, without enquiring to whom it belonged. Soon after, the duchess coming into lady Betty's room, found her reading this ill-fated book, tore it from her in a violent rage, and threw it into the fire, aſking, with the greateſt indignation, '*if that was a book fit for the daughter of a duke?*' By what means her *grace* learned that it was my property, I know not, but I was immediately called, my wages paid, and diſmiſſed as a ſervant who was too dangerous for ſuch a family. The meaning of theſe laſt words I never could diſcover, and as they gave me no ſort of uneaſineſs, I thought it would be *preſumption* to aſk.

Were I, ſir, to go through the other families in which I obtained a ſhort-lived ſervice, I could make very little alteration in the above accounts. The ſame obſtructions I had to encounter every where, unleſs in my laſt ſervice, where I had the happineſs to meet with a maſter, as tenacious of truth and ſincerity as any *ſervant* could be. After ſome years ſervitude with him, and having ſaved ſome money from my former places, he aſſiſted me in procuring a ſhop, where I carry on an increaſing buſineſs, much to my ſatisfaction.

I wiſh, therefore, ſir, that maſters would conſider how much they muſt in the end loſe by taking from their ſervants the little portion of honeſty and fidelity with which they come into life. In vain have Sunday ſchools been inſtituted to raiſe a generation of faithful and honeſt ſervants, if their firſt duty be to tell a falſehood, which is the commencement of all other wickedneſs. In vain are they taught in Sach ſchools, the true principles of pious and regular conduct, if their maſters make it their *intereſt* to deviate from that conduct, and to imbibe all the follies and licentiouſneſs of the ſervants, who did not enjoy ſuch opportunities of early inſtruction. And laſtly, ſir, if this letter and theſe remonſtances ſhould produce no effect, I will venture to prophecy that faithful, ſober, and honeſt ſervants, will become ſcarce—a national calamity, for which the preſent race of maſters will have themſelves only to thank.

I am, ſir, &c.

I. T.

On the PROPAGATION *of certain* VICES *by erroneous Language.*

IT is among the misfortunes of mankind, that in their eagerneſs to avoid one evil, they are apt to run, and that often precipitately, into another—Minds ſo firm, as to avoid following the impulſe of the multitude, and ſo penetrating as to be able to ſtrike the happy medium between oppoſite exceſſes, are peculiar to the wiſe only, to thoſe who think before they act, and with whom no cuſtoms ever ſo well eſtabliſhed have any other authority than they can derive from truth and juſtice. The character of a hypocrite has, above all others, been held in the greateſt diſgrace. The terror of hypocriſy took its riſe in the laſt century; all who were concerned in the civil wars on the ſide of the people were conſidered as hypocrites, becauſe, under pretence of remedying certain grievances, they overturned the whole fabric of government. This imputation, whether true or falſe, promoted a hatred of religious and moral profeſſions, and induced that contempt of every thing ſacred and ſerious, which prevailed during the remainder of the reign of the houſe of Stuart. From theſe times we have

derived no inconſiderable portion of the ſame ſpirit, as far as regards the averſion to hypocriſy. Hence, to profeſs a regard for religious and moral duties is, to ſay the leaſt, ſuſpicious, and to ſpeak with indifference, or even boaſting, of certain vices, is the approved mark of a free ſpirit and open diſpoſition.

But if we conſider how much the morals, as well as the manners of youth, are formed by the converſation which they hear, we may be allowed to ſuſpect that the lenity, with which vices of the moſt diſhonourable and pernicious nature are mentioned, tends very much to efface the impreſſion of diſguſt, which they would naturally fix in an honeſt and ingenuous mind. This will be underſtood, when the reader is reminded of the frivolous and unconcerned manner in which the crimes of adultery, drunkenneſs, quarrels, and prodigality, are treated, and the many *pretty* names that have been invented to hide the real nature of ſuch vices. What is called an affair of gallantry, and an affair of honour, have often conducted a wife to miſery, and a huſband to an untimely grave. And when a raſh, proud, and unforgiving temper, is ſoftened by the names of *honour* and *proper ſpirit*, can we wonder if ſuch falſe virtues ſhould become ſo common as to enter into the eſtabliſhed forms of ſociety? It is owing to this, that a falſe notion of honour every day induces ſome raſh and miſguided man to imbrue his hands in the blood of a fellow-creature, and that this violation of the laws of God and man, is heard of with indifference, and paſſed by with impunity. This, we may fairly conclude; would not be the caſe, if all vices were called by their proper names, and never mentioned with levity, but with the contempt and abhorrence due to them.

In early youth, indeed, we are taught, if our education has not been wholly neglected, to form juſt conceptions of moral good and evil, and theſe enormities are then repreſented to us in their naked deformity. The impreſſion they make is then ſtrong, and we feel all the abhorrence that we can be ſuppoſed to feel, from having merely heard of ſuch things. We wonder then at the amazing folly of mankind; we ſee nothing manly, dignified, or praiſe-worthy in vice, and acts of diſhoneſty and diſhonour are particularly repugnant to our feelings; and repugnant to the ideas we form of the beauty and utility of a virtuous courſe.

But whoever has mixed much in the buſy or the gay world, knows how ſoon theſe impreſſions wear off, how ſoon we forget the theory of virtue by being attracted by the practice of vice—not open, undiſguiſed vice, which would at once put us upon our guard, but thoſe ſoftened and civilized vices (if I may uſe the phraſe) which conceal their native deformity under a gentleneſs of language and a tenderneſs of epithet, which we are not prepared to reſiſt, becauſe we do not ſee its danger. By and by we ſee a profeſſed duelliſt, a gambler, a ſeducer, and a ſpendthrift, introduced into the *beſt* company, and received with the ſame, often with greater reſpect, than a man of honour, learning, or piety. Theſe inconſiſtencies at firſt ſurpriſe us, but when we find the ſenſe of thoſe we keep company with is againſt us, we gradually ſubmit, our opinions gradually coaleſce with theirs, and we think we are perfectly ſecure from practiſing ſuch vices, merely becauſe opportunity has been wanting, and temptation abſent. With great truth, and with accurate knowledge of human life, which diſtinguiſhes all his writings, has Dr. Johnſon ſaid, that *there are few who do not learn by degrees to practiſe thoſe crimes which they ceaſe to cenſure.*

On the other hand, it may be pleaded, that ſociety requires of us thoſe duties of conviviality, and mutual forbearance, without which the vicious might be hardened, and the

virtuous leſt to their confined circles; that to be always finding fault, and inveighing againſt vice, may as often proceed from a peeviſhneſs of temper, as from a real abhorrence of vice, and a deſire to reform others; and that common good manners requires that we be not too ſevere upon the follies and crimes of thoſe with whom we are in habits of acquaintance. More may be urged on the ſame ſide of the queſtion, and as eaſily anſwered. It is not ſufficient for us not to do evil; we muſt not even countenance it, and what is the great merit of faſhionable vices that we dare not to mention them, unleſs with delicacy? What is the loſs that accrues from ſhewing a profligate that you deſpiſe his conduct? The company of ſuch a man may have charms, but it has no ſolid advantages, and it is beneath any man who poſſeſſes *reaſon*, to ſubmit himſelf to faſcination. To liſten without diſguſt, or with approbation, to a detail of profligate adventures or maxims, is to confound all diſtinctions between vice and virtue, and to make the latter crouch and bend to the former. The beſt company, may, by this conduct, be eaſily made the worſt.

There can be little doubt, that ſubmitting our opinions on ſuch ſubjects to the hacknied cant of the faſhionable world, is a chief cauſe of the errors and defections that are every day made from a virtuous courſe. No principles can ſtand againſt ridicule, if we will not take the trouble to defend them, and when they are attacked merely by ridicule, and a recital of the profligate adventures of knaves and fools, it is not perhaps eaſy to do this without exerciſing a proper ſeverity. But this no man ever did, and repented of it. When a creature of faſhion has told you of his midnight exploits, his low intrigues, and his gaming advantages, he has done. You need not be afraid that he will appeal to reaſon or common ſenſe, or that he will call in the aid of one juſt principle or rule of action. All theſe are againſt him.

In the affairs of buſineſs, it may be remarked, that to *take advantage* is an expreſſion in very common uſe, and when the words are compared with the fact to which they refer, they will be found to include many kinds of diſhonourable tranſactions. To enumerate theſe would require a volume, and it would be unneceſſary, if poſſible, to give them here, becauſe few who read this paper, if any, can be ſuppoſed ignorant of what happens every day. Theſe are practiſed without much conſideration, becauſe the *quantum* of criminality in each tranſaction is concealed in the gentleneſs of the phraſe *taking advantage*, and becauſe immemorial cuſtom has ſanctioned a thouſand of ſuch *advantages*, and even ſuggeſted the plea of neceſſity. That one man ought to take advantage becauſe another does, is a propoſition as abſurd as ever entered into the head of man, and there are no crimes it would not juſtify. Becauſe thieves have broken into my houſe and taken my property, am I to break into my neighbours, and repay myſelf by taking his? The law and the gibbet ſay, no—yet how much more conſiſtently does he argue who ſays, my neighbour has gained a fortune by taking ſuch and ſuch advantages, why ſhould not I do the ſame? It is thus that the juſt diſtinctions between good and evil are deſtroyed, and that ſo many men practiſe what is vicious and diſhonourable, without the conſciouſneſs of doing what is wrong. One of the ancients mentions it among the ſymptoms of a declining nation, 'when the things that are *vices* become manners.'

C.

A Picturesque Description of the River RHINE, *from its Sources in* Switzerland *to its Entrance, under different Names, into the* German Ocean: *With Historical Anecdotes and Reflections.*

To the Editor of the Universal Magazine.

Sir,

As the celebrated River Rhine *flows through so many of the Countries which are at present the Seat of War; as this noble Stream is remarkable for a Circumstance which attends no other in* Europe, *that of being degraded into a mere Rivulet and lost, ere it can reach the Ocean, in the only Branch of it that is permitted to retain its original Appellation; and as it exhibits, in its long Course, a Variety of sublime, and beautiful Objects; I have taken the Liberty to send you a Picturesque Account of it, from its Source, to what I may call its unfortunate Catastrophe. I shall be happy to see it inserted in a Miscellany so replete with various interesting and useful Information; and am, Sir, &c.*

AMATOR AMNORUM.

THE CONTENTS.

Source of the Hinder Rhine.—Beautiful Cascade.—Sources of Further Rhine and Middle Rhine.—Valley of Sopra.—Curious Bridges at the Town of Reichenau.—Environs of Coire.—First Navigable Part of the Rhine.—Lake of Constance.—The City.—Council of Constance.—Merton Abbey.—Island of Reichenau.—Deplorable Fate of an Imperial and Royal Sovereign.—Curious Bridge at Schaffhausen.—Celebrated Cataract at Lauffen.

THE celebrated Rhine, the boundary of so many considerable states in Europe, has its sources in the Alps of the country of the Grisons, in Switzerland. It is formed of two principal streams, the Upper Rhine to the east, and the Lower Rhine to the west.

The Upper Rhine, which is also called the Hinder Rhine, issues from one of the greatest glaciers in all Switzerland, in Mount Vogelberg, or the Bird Mountain.

——— Ruunt de montibus amnes.
VIRG.

Torrents roll roaring down the mountain's sides.

Those from the neighbouring mountain of St. Bernardin rush onward to augment the infant stream, which flows from the village of Splugen to Ander, through a mountainous region, presenting, at every point of view, the most awful magnificence of scenery. It flows hence to Zillis, and, afterward, by the side of the *Via Mala*, a road, so called from the supposed difficulties and dangers of passing through it. Such dreadful descriptions have been given of it by different travellers, that every new tourist may expect to find it the worst road he had ever explored. He will, however, be agreeably deceived; for he will not find it more incommodious than the way from Splugen to Ander; nor will he once think it necessary to dismount from his horse, except when he chooses to stop, to take a nearer view of any particular scene. The road even admits of carriages. No reason, therefore, can be imagined, why this particular way should be distinguished by the appellation of *Via Mala*, unless such descriptions allude to former times, and modern writers have adopted them as the mere echos of ancient travellers. Perhaps the peculiar gloom of the

valley, through which the road paſſes, may have contributed to convey their ideas of terror to perſons not accuſtomed to Alpine regions. Indeed, the *Via Mala* runs through a dark and uninhabited valley, overſpread in many parts with thick foreſts, which admit only a kind of twilight gloom, and ſo exceedingly narrow, that the ſteep rocks, which incloſe it, hang over, and ſeem almoſt to meet toward their ſummits. The Rhine foams at the bottom, ſometimes not viſible, and ſometimes faintly glimmering

Through darkſome pines, that, o'er the rocks reclin'd,
Wave high, and murmur to the hollow wind. POPE.

About three miles from the commencement of the *Via Mala* is a ſtone bridge of a ſingle arch, thrown acroſs a gulf; a ſublime ſcene, which the traveller will ſtop to admire, and will leave with regret. The river falls in a beautiful caſcade, rolls in a narrow channel at the depth of more than 400 feet perpendicular, furiouſly daſhes under the bridge, expands itſelf into a wide baſin, and then is loſt under a rock, through which it has forced a paſſage. The impending mountains, partly bare, and partly embrowned with firs, caſt an awful gloom over the gulf below.

The traveller will be greatly ſtruck here with a circumſtance, which he may have obſerved, indeed, in other vallies of Switzerland, but no where in ſuch perfection as at this place. The Rhine, which is, at preſent, about 400 feet below the bridge, ſeems evidently to have once flowed as high, or even higher than the bridge now ſtands, to have gradually worn away the rock, and excavated the deep channel in which it now runs.

Having paſſed this bridge, the traveller proceeds through a ſubterraneous opening, a few paces in length, which had been cut through the overhanging rock; and, a little farther, he will croſs a ſecond bridge, ſimilar to the firſt. Hence this branch of the Rhine proceeds by Tuſis and Furſtenau, and joins the Upper Rhine at Reichenau.

To the Lower Rhine two ſources are aſcribed: the firſt, called the *Vorder Rhein*, or Further Rhine, deſcends from a glacier on the ſummit of Mount Badus, and forms a piece of water, half a mile in circumference, called the Lake of St. Thomas: the ſecond, named the Middle Rhine, iſſues from Mount St. Barnabas. They are both inſignificant rivulets till their junction below Diſentis, when the Upper Rhine is not larger than the Hinder Rhine. It paſſes by Ilants, the capital of the Grey League, flowing through the valley of Sopra Selva, in a rapid and ſhallow ſtream, which forms repeated cataracts. The valley of Sopra Selva, which is the moſt populous of the Grey League, extends from Mount St. Gothard to Reichenau, where, as before obſerved, the Upper and Lower Rhine unite.

At Reichenau, are two curious bridges, built by the nephew of Ulric Grubenman, the ſelf-taught architect of the celebrated bridges of Schaffhauſen and Wettingen. The firſt, which is thrown acroſs the Hinder Rhine, meaſures 105 feet. The ſecond is built acroſs the Rhine, below the point of union, and forms a very beautiful object. It is a wooden bridge, of a ſingle arch, covered like that of Schaffhauſen; and the ſpan of the arch is 220 feet in length.

From Reichenau, the Rhine paſſes within a mile of Coire, the capital of the country of the Griſons, the environs of which are delightful. The plain, through which the Rhine rapidly flows, is richly diverſified with corn and paſture; the hills, gradually ſloping to the foot of the mountains, are covered with vines, which yield wine of an agreeable flavour, but not ſtrong. The points of view vary ſurpriſingly, from agreeable to romantic, from romantic to wild. The river begins here to be navigable for rafts, and merchandiſe is tranſported by it toward Lindau and Zuric. After

paſſing by Mayenfeld, Sargans, Werdenberg, and Sax, and forming the boundary between the Rheintal, or Valley of the Rhine, and the circle of Auſtria, it enters the lake of Conſtance, below Rheinec, the capital of this valley. This lake is one of the largeſt in Swiſſerland, and ſeparates it from Suabia. It is divided into three parts: the upper part, which is the largeſt, is alſo called the *Boden See*: that in the middle is named the *Bodmer See*: and the lower part is denominated the *Unter See*, the *Zeller See*, or the lake of Zell. The lake of Conſtance, including its three diviſions, is about twelve leagues in its greateſt length, and four in its greateſt breadth. On its banks are the towns of Zell, Überlingen, Merſpurg, Buchorn, and Lindau, in Suabia; of Bregens, in the Tirol; and of Roſchach and Arbon, in Swiſſerland. At Merſpurg it is 300 fathoms deep. It is well ſtored with fiſh, with which a great trade is carried on; quantities of them being ſent pickled as far as Vienna. The veſſels employed on this lake are from 120 to 150 tons burden. Its environs are pleaſant and well cultivated, its borders conſiſting of gentle-riſing hills. It is ſurrounded by a number of towns, villages, caſtles, monaſteries, &c. The juriſdiction of this lake belongs partly to the houſe of Auſtria; and partly to the eight ancient cantons, ſovereigns of Thurgau; and to the abbot of St. Gall. Their limits were determined by a treaty concluded in 1685, with the emperor Leopold.

Between its outlet at the weſtern extremity of the Boden See and its entrance into the eaſtern extremity of the lake of Zell, the Rhine, on its left bank, forms a delightful ſituation for the city of Conſtance, within the limits of Suabia, oppoſite to which is Peterhauſen. A ſuſceptible mind will be much affected with the ſolitary appearance of a town, once ſo flouriſhing in commerce, and ſo celebrated in hiſtory. A dead ſtillneſs reigns throughout; graſs grows in the principal ſtreets; in a word, it wears the melancholy aſpect of being almoſt totally deſerted; and ſcarcely contains 3000 inhabitants. It has experienced a melancholy reverſe of fortune: ſupported by the alliance of Zuric and Baſle, the inhabitants had expelled their biſhop, and embraced the reformation. But the Proteſtant cantons having been worſted in 1531, and the league of Smalkald, of which Conſtance was a member, having been defeated by Charles V, the town was obliged to ſubmit to the emperor, and to readmit the Catholic religion. From this period, it loſt its independence, and being neglected by the houſe of Auſtria, fell, by degrees, into its preſent almoſt annihilated ſtate; exhibiting to ſome of the neighbouring Swiſs cantons an inſtructive contraſt, which muſt ſenſibly endear to them their own invaluable happineſs, in the commerce and liberties which they enjoy.

Travellers who viſit this city are ſhewn the chamber in which the council of Conſtance was held in 1415, and they may have the honour of ſitting in the two chairs, in which ſat pope John XXIII, and the emperor Sigiſmund; if any honour can be derived from a turbulent pontiff and a perjured ſovereign. By the ſentence of this council, the celebrated reformer, John Huſs, who had embraced the doctrines of our illuſtrious Wickliffe, was burnt as a heretic, notwithſtanding the infamous emperor had granted him a ſafe-conduct *. Jerome of Prague, his diſciple, had the weakneſs to recant before the ſame council; but this weakneſs was amply atoned for by the magnanimity with which he retracted this recantation, and the calm intrepidity which he diſplayed, in his laſt moments, at the ſtake.

In 1785, the emperor Joſeph II

* It is remarkable, that, afterward, at the diet of Worms, Luther, in like manner, truſted to the ſafe-conduct of Charles V; but that emperor would not imitate his predeceſſor.

invited a colony of emigrant Genevans to ſettle in this city; and by the year 1787, ſeventy families, chiefly watchmakers, had ſettled here, attracted by the aſſurances of the free exerciſe of their religion, and other liberal encouragement. A convent of Dominicans, which had been ſecularized; was granted to them, for the purpoſe of eſtabliſhing a manufactory of printed linens and cottons; and the refectory was appropriated for the chapel of the new colony. Mr. Coxe viſited this convent in 1787: 'I did not omit,' ſays this excellent writer, 'viſiting a ſmall dungeon, about eight feet long, ſix broad, and ſeven high, in which John Huſs was confined, and wherein I obſerved the very ſtone to which he was chained. I entered it, however, with very different ſenſations from thoſe which I experienced in 1776, when this convent was the abode of monkiſh ſuperſtition. It is now the ſeat of trade and induſtry *; and it muſt ſuggeſt a pleaſing reflection to a philoſophic mind, that a ſucceſſor of Sigiſmund, who violated his word, ſhould have conſigned to a reformed eſtabliſhment that very convent in which the Bohemian divine was impriſoned, and from which he was triumphantly led to the ſtake; and that the moſt enlarged principles of toleration ſhould be manifeſted in the ſame place, where perſecution was inculcated by precept and example. It is the triumph of reaſon and religion over bigotry and intolerance.'

'Leaving Conſtance, the Rhine enters the Zeller See, which it leaves near Stein, an independent town, under the protection of Zuric. Travellers ſeldom fail to viſit the iſland of Reichenau, in this lake. It is about three miles long and one broad; and contains about 1600 inhabitants (all Catholics) three pariſhes, one village, and a rich Benedictine abbey, of which the biſhop of Conſtance is abbot. This abbey once counted 500 gentlemen among its vaſſals, and its abbot was a prince of the empire. Among the relics in the convent is ſhewn a curious tooth of Charles le Gros. That monarch, who was emperor, and king of France, and who poſſeſſed dominions as extenſive as thoſe of Charlemagne, lived to want the common neceſſaries of life, and to depend for ſubſiſtence upon the charity of an archbiſhop of Mentz. He was publicly depoſed, in 887, at a meeting of the principal French, German, and Italian barons, whom he himſelf had ſummoned. He died, a year after, in extreme want and miſery, at a ſmall village, near Mentz, and his remains were conveyed to this convent, where his tomb is to be ſeen †.

'Hitherto the Rhine had kept a courſe nearly north by eaſt: from Stein it takes a weſterly direction to Dieſſenhoffen and Scaffhauſen. At the latter town, the Rhine is near 400 feet wide, and has a curious wooden bridge built by Ulric Grubenman, a carpenter of Tuffen, in the canton of Appenzel; a man, totally ignorant of the theory of mechanics. The river being extremely rapid here, had already deſtroyed ſeveral ſtone bridges of the ſtrongeſt conſtruction, when Grubenhagen offered to throw a wooden bridge of one arch over the river. The magiſtrates, however, required that it ſhould conſiſt of two arches, and that he ſhould, for that purpoſe, employ the middle pier of the old bridge. He has done ſo, but has contrived to leave it

* In a ſhort excurſion from London, the pleaſing contraſt between a retroſpective view of the monkiſh abodes of indolence and ſuperſtition, and the actual contemplation of the ſeat of trade and induſtry, muſt inſpire the philoſophic traveller with the moſt pleaſing reflections. At Merton, in Surry, was one of the moſt celebrated abbies in England, the walls of which ſtill remain entire, and incloſe a ſpot of about ſixty acres, containing two calico manufactories, and copper mills, which employ, upon a moderate computation, one thouſand perſons.

† Other accounts ſay, that he died in this iſland.

a matter of doubt, whether the bridge is really ſupported by the middle pier, and whether it would not have been equally as ſafe if formed of one arch. 'It is,' ſays Mr. Coxe, 'a wooden bridge, of which the top and ſides are covered, and is what the Germans call *hængewerk*, or hanging bridge: the road, which is almoſt level, is not carried, as uſual, over the top of the arch, but, if I may uſe the expreſſion, is let into the middle of it, and there ſuſpended. The pier is not in a right line with the buttreſſes, as it forms with them a very obtuſe angle pointing down the ſtream, being eight feet out of the rectilinear direction. The diſtance of this middle pier from the ſhore that lies toward the town is 171 feet, and, from the other ſide 193; in all 364; making, in appearance, two arches of ſurpriſing width, and forming a beautiful perſpective when viewed at ſome diſtance. A man of the ſlighteſt weight feels it almoſt tremble under him; yet waggons heavily laden paſs over without danger. It has been compared to a tight rope, which trembles when ſtruck, but ſtill preſerves its firm and equal tenſion. I went under this bridge, in order to examine its mechaniſm, and could not avoid being highly pleaſed with the ſimplicity of the architecture. I was not capable of determining whether it reſts on the middle pier; but many judges agree that it does not.'—Subſequent obſervations, however, ſatisfied Mr. Coxe that it did.

Three miles below Schaffhauſen, at the village of Lauffen, is a celeberated cataract. A ſcaffolding is erected in the very ſpray of this tremendous fall, and upon the moſt ſublime point of view; the ſea of foam ruſhing down; the continual cloud of ſpray ſcattered to a great diſtance, and to a conſiderable height; the magnificence of the whole ſcenery, in a word, ſurpaſſing the moſt ſanguine expectations, and exceeding all deſcription. Within about 100 feet of the ſcaffolding, two crags riſe in the middle of the fall. The neareſt is perforated by the continual action of the river; and the water forces itſelf through, in an oblique direction, with inexpreſſible fury and a hollow ſound. 'After having contemplated,' ſays Mr. Coxe, 'the awful ſublimity of this wonderful landſcape, we deſcended, and croſſed the river, which was extremely agitated. Hitherto I had only viewed the cataract obliquely; but here it opened by degrees, and diſplayed another picture, which I enjoyed at my leiſure, as I ſat down upon the oppoſite bank. The moſt ſtriking objects were the caſtle of Lauffen, erected upon the very edge of the precipice, and projecting over the river; near it, a church and ſome cottages; a clump of cottages cloſe to the fall; in the back ground, rocks, planted with vines, or tufted with hanging woods; a beautiful little hamlet upon the ſummit, ſkirted with trees; the great body of water, that ſeemed to ruſh out from the bottom of the rocks; the two crags abovementioned boldly advancing their heads in the midſt of the fall, and in the very point of its ſteepeſt deſcent, their tops ſprinkled with ſhrubs, and dividing the cataract into three principal branches. The colour of the Rhine is extremely beautiful, being of a clear ſea-green; and I could not but remark the fine effect of the tints, when blended with the white foam in its deſcent. There is a pleaſing view from an iron foundry cloſe to the river, which is dammed up, in order to prevent its carrying away the works and neighbouring cottages. By means of this dam, a ſmall portion of the river is diverted, turns a mill, and forms a little ſilver current, gliding down the bare rock, and detached from the main cataract. Below the fall, the river widens conſiderably into a more ample baſin: at the fall the breadth ſeems to be about 300 feet. As to its perpendicular height, travellers differ: thoſe who are given

to exaggeration reckon it 100 feet; but I ſhould imagine fifty or ſixty feet will be nearer the truth.'

Mr. Keate, in his Poem on the Alps, has noticed this celebrated fall, in his deſcription of which he had a large ſcope for imitative harmony; but he ſeems to have contented himſelf with preciſion of imagery. Speaking of the junction of the two principal branches of the river at the town of Reichenau, he ſays,

Here the double Rhine
Blends its twin ſtreams yet ſlender, and from Coire
In circuit ſweeps to Conſtance; then adown
The rugged cliffs of Lauffen furious pours
The boiling cataract, with thundering roar
Far-echoed; in its daſhing fall the foam
Snatch'd by the eddying winds, diſperſes round
A miſty ſhower.—

[To be continued.]

HINTS *reſpecting the* CULTURE *and the* USE *of* POTATOES.

[Printed and circulated by the Board of Agriculture.]

THE Board of Agriculture think it incumbent upon them to take the earlieſt opportunity of ſubmitting the following hints to the public; they come recommended by the experience of many who have cultivated potatoes largely.

SORTS.

Two circumſtances require attention: 1, That the ſorts ſhould not be liable to the *curl*; and 2, That they ſhould be mealy. The kind known under the name of the champion has thoſe qualities, and is alſo very early and productive. The ox-noble is hardy, keeps well, and, in the ſpring, boils mealy. The kidney is of an excellent quality, and though the crop is leſs productive, and in ſome ſoils liable to curl, the price at market is proportionably greater. The ſurinam, cluſter, or yam, ſo well calculated for ſtock, never curls, and is extremely productive. Thoſe who cultivate potatoes on a great ſcale, ought to have different ſorts,—for early uſe,—for keeping,—and for ſtock.

MODES of PLANTING.

1. Drilling on land already in tillage. 2, Dibbling upon graſs or lays. 3, Lazy beds on bogs, wet peat moors, and lands too rough to plough.

Drilling.

Soils liable to be wet during the winter ſhould be ploughed in autumn, ſo as to lie dry. In the ſpring, plough and harrow flat. In April and May, the ſets may be planted. Draw furrows three feet aſunder; in thoſe furrows lay the dung, not leſs than twenty loads or tons per acre. Drop the ſets on the manure nine inches aſunder. If the land be at all ſtiff, cover the dung and ſets, by drawing earth over them with hand-hoes; adding more, afterward, with the plough; if it be light and friable, they may be covered with the plough. Keep the intervals clean, by ploughing or horſe-hoeing, for ſix or eight weeks after the potatoes appear; afterward by hand-hoeing: hand-hoe the rows when young, and afterward weed them. Take up the crop by opening the rows with a plough, and harrow and pick more than once.

Lands prepared and dunged for wheat that could not be ſown, or where the plant has been deſtroyed by the froſt, are ready, without further manuring, to receive potatoes in this mode of culture.

Dibbling.

If the ſoil of the graſs be very rich, it will want no manure; if moderately good, only ten or twelve tons per acre. If no manure be ſpread, plough late in autumn, and ſcuffle or ſhim the ſurface ſhallow; or, for want of thoſe tools, if weeds or graſs ariſe, hand-hoe it in March. If manure be uſed,

ſpread it on the lay in ſpring, and plough it in; in either caſe, dibble in the ſets ſtraight on the centre of every other furrow, nine inches from plant to plant. Keep clean by hand-hoeing; but a narrow ſhim may be paſſed twice along the intervals. Weed the rows, if neceſſary. When the crop is taken up, plough *acroſs* the former furrows.

This method is applicable alſo to dry moors and waſtes, capable of being ploughed; and, by paring and burning the ſurface, during the drying north-eaſt winds of March, dung may be ſaved. To add lime, in ſuch caſes, to the aſhes, is beneficial.

After an early crop of graſs for hay, or after the firſt crop of clover, the land may be ploughed and potatoes dibbled in, if proper ſets have been preſerved for that purpoſe; and in the more ſouthern parts of the iſland a good crop may be obtained.

Lazy Beds.

Upon bogs, partially or wholly drained, and upon ſuch rough ſoils as are difficult to plough, this method may be adopted. Pare and burn the ſurface; add lime to the aſhes. Strike the land into ſtraight beds, ſix feet wide, with intervals of two feet, or two and a half. Lay the ſets twelve inches ſquare on the beds, and cover them two or three inches deep, with ſpades, from the intervals; when the plants appear, cover them again in the ſame manner, one and a half or two inches more. Keep them clean, by one hand-hoeing and ſucceſſive weeding. They may be taken up with the plough, by ſplitting the beds and filling the former intervals; converting the open furrows, left in the centre of the former beds, into drains, deep enough to leave the land dry in winter.

Produce.

In any of theſe methods the farmer may expect from 200 to 300 buſhels an acre, of 75 lb. per buſhel. Some ſoils will yield more, and ſome may afford leſs. The ſelling price, throughout the kingdom, may be reckoned from 1s. to 1s. 6d. the buſhel; at 1s. 3d. 300 buſhels yield 18l. 15s. the acre; even at 1s. it is 15l. The expences will vary with circumſtances, but they can ſcarcely be reckoned more than 10l. and conſequently leave from 5l. to 8l. 15s. profit per acre, counting on an average. In ſome places the charges will run higher; in others, perhaps, ſomething leſs. The drill method is, by much, the cheapeſt. If the whole ſhould not be ſaleable, the reſt may be given to fatting oxen, to horſes, and to any other live-ſtock, with advantage; particularly if, when boiled or ſteamed, a handful of ſalt be added to two buſhels of potatoes.

Double Crops.

In Cornwall, in Cheſhire, in Lancaſhire, and in the neighbourhood of London, two crops have been obtained from the ſame ground in one year; the mode of raiſing which, will be found in the agricultural reports from the counties of Cheſhire and Lancaſhire *. Thoſe who raiſe early potatoes, may certainly have a ſecond crop on the ſame ground.

The Following Crop.

Wheat has been ſown with ſucceſs after potatoes; but barley or oats are more to be recommended. On dry moory ſoils, treated as above, turnips may follow, fed off by ſheep, and theſe by ſpring corn and graſſes.

Preservation.

The moſt approved method, is that

* The method purſued in Cheſhire, for raiſing early potatoes, is to keep the ſets of the earlieſt kinds in a warm place, where they may ſprout, at leaſt, three inches by the beginning of March; being covered with ſtraw or ruſhes every night, in froſts. They are carefully planted with the ſprouts on, in drills, on a light ſoil; the end of the ſprout juſt under the ſurface of the ground. Yield a crop the middle of May.—Cheſhire Report, page 18. See alſo Lancaſhire Report, page 32, where a very full account is given of the proceſs.

of digging, in a very dry ſpot, trenches, ſix feet wide and eighteen inches deep; ſpread ſtraw; pile the potatoes into the ſhape of the roof of a houſe; cover tight and cloſe, with ſtraw, ſix inches thick; and then with earth, fifteen or eighteen more; flatted regularly and firmly, and ſharp at top, raiſed from three feet to five feet above ground. If there ſhall be any apprehenſion of moiſture, dig a trench a few yards off, deeper than that in which the roots are laid. The drier they are, when thus packed up, the ſafer they will be.

GENERAL HINTS.

There are a great number of borders round the corn fields of every farm, which may be broken up to great advantage; as potatoes always thrive beſt upon newly broken up ground; and if the ſoil ſhall be tolerably good, the turf, being inverted at about eight or ten inches depth, will be nearly as efficacious as dung.

Upon large farms, labourers might be allowed to plant for themſelves, in ſuch angles and corners as might otherwiſe be neglected, which would be a beneficial indulgence to them, and no material loſs to the poſſeſſor. In waſtes in general, alſo, potatoes might be raiſed, with little manure, to great advantage.

POTATOE BREAD.

To thoſe who prefer making potatoes into bread, to the common modes of uſing them, the following receipt is recommended,

'Chooſe the moſt mealy ſort of potatoe, boil and ſkin them. Take 12 lb.; break and ſtrain well through a very coarſe ſieve of hair, or a very fine one of wire, in ſuch manner as to reduce the roots, as nearly as poſſible, to a ſtate of flour. Mix it well, with 20 lb. of wheaten flour. Of this mixture, make and ſet the dough exactly in the ſame manner as if the whole were wheaten flour. This quantity will make nine loaves, of about 5 lb. each in the dough; and, when baked about two hours, will produce 42 lb. of excellent bread.'

The raw potatoe alſo, ſkinned and grated down, and mixed with flour in the above proportion, make very good bread.

The board takes the liberty of deſiring the clergy, in their ſeveral pariſhes, to have the goodneſs to communicate the above to their neighbours; and, at the ſame time, to encourage, as much as they can, the farmers and cottagers to plant potatoes this ſpring, in order that the kingdom may experience no ſcarcity, if the next harveſt ſhould prove either very late, or not ſufficiently productive in bread corn.

The board would have taken a more direct and reſpectful mode of requeſting the aſſiſtance both of the clergy and laity, in promoting theſe objects, had they not conceived this to be the moſt expeditious and extenſive.

The board will be happy to give any additional information, to thoſe who may be inclined to enter, with zeal and energy, into the meaſures above propoſed. Any letters upon the ſubjects may be addreſſed to ſir John Sinclair, bart. M. P. London, or to any other member of the board.

A more enlarged paper, pointing out the additional experiments neceſſary for bringing the culture of potatoes to perfection, is preparing, and will ſoon be publiſhed. In the interim, the board thought it adviſable to print and circulate the preceding hints as early as poſſible, that the attention of the public might be drawn to ſo important an object; and that thoſe who might be induced, from the recommendation of the board of agriculture, to attend to the culture of this valuable root, might have it in their power to take, without delay, the neceſſary ſteps for that purpoſe; more eſpecially that of ſecuring, without loſs of time, a ſufficient quantity of the beſt ſorts for planting.

Signed, by order of the board,

JOHN SINCLAIR, Preſident.

Whitehall, Feb. 20, 1795.

DIALOGUES OF THE DEAD.

By Mr. J. BEATTIE *.

To the Editor of The Universal Magazine.

Sir,

The handſome Notice you took of my laſt Communication, induces me to ſend you the incloſed, by the earlieſt Opportunity. It would be impertinent in me to point out its ſeveral Merits. You will at once ſee that, in the moſt pleaſing Way, it ridicules and corrects thoſe many Errors into which, not only the Vulgar, but moſt of our beſt Speakers and Writers have lately fallen, from an Affectation of Novelty. I know no Publication, in which ſo many of theſe new-coined Words are taken Notice of; and, independently of the Pleaſure this Dialogue affords, as a Piece of Satire and juſt Criticiſm, it will prove an uſeful Vade Mecum to Writers and Speakers in general. I am, Sir, &c. D. E. R.

DIALOGUE II.

SWIFT, a BOOKSELLER, and MERCURY.

Bookſeller.

TO enjoy *in future* the company of a gentleman whoſe *conſequential* character *in the literary line* I have long *made up my mind upon*, is a pleaſure which I *ſet great ſtore by*, though obtained by the loſs of my exiſtence.

Swift.—Pray, friend, where did you learn your Engliſh?

Bookſeller.—I was born and bred in London, and of ſuch *marked* regularity in my *line of conduct*, that no man could charge me with a ſingle act of *inciviſm*, or any thing that *went* to the *diſorganization* of the ſociety of which I was a member. I ſerved an apprenticeſhip to a *tip-top* bookſeller, and have often heard the moſt learned authors diſcuſs points of literature. I have ſeen them, ſir, for hours, *on their legs*, and *going into a variety of matter*. The deuce is in it, if I do not ſpeak Engliſh of the very neweſt and beſt pattern.

Swift.—In what part of the town did your learned authors find kennels and dunghills to wade into the way you mention? Fleetditch, I am told, is now very decent; and has not half that variety of filthy matter, dead cats and dogs, drowned puppies, and ſtinking ſprats †, which it formerly had. But firſt of all, friend, what was your laſt employment in the other world?

Bookſeller.—*In place* of *negativing* your queſtions as *inimical*, though I own that at *this firſt bluſh of the buſineſs* they appear ſo, I ſhall be happy, *on the inſtant*, to *meet your ideas*, and *narrate* what you *deſiderate*, not doubting of being *well heard*.

Swift.—Sir, I am not deaf now, as I was in the other world; I ſhall hear you well enough, if you ſpeak diſtinctly. I aſk, what trade you followed?

Bookſeller.—You mean, I ſuppoſe, in what *profeſſional line* I was bred. I hinted already that my employment was to *bring forward* to the view of the public *at large* the *ideas* of the learned; in other words, I was in the typographical and *bookſelling lines*; and am *free to ſay*, that in both *lines* my *line of conduct* was *indicative* of *exactitude* to a *degree*. I *netted*, ſir, although my *expenditures* were not ſmall, ſo conſiderable a ſum, that, on the *demiſe* of my wife, who *reſigned her exiſtence* about a year ago, I *ſported ſables* in my own *gig and pair*. I *had in contemplation* a ſeat *in the commons*; but—

Swift.—So; you were a bookſeller. In my time, however, the

* See our Magazine, for Feb. p. 92. † See Swift's deſcription of a city ſhower.

idea of a learned man could have been comprehended by the *large public*, or the *public at large* (how did you call it, pray?) without the help of an interpreter. But perhaps I did not take your meaning.

Bookſeller.—Dear ſir, what *unfounded ideas* you *bring forward*? You take me up *on a ground* entirely different from that on which I intended to *meet you*. I have formerly *ſet ſtore by you*; having heard you *held forth* as one who had ſecured the *marked* approbation of many. You ſeem inclined to *maltreat* me, but have ſaid nothing that *militates* againſt me as a *profeſſional* man, or *goes to ſubſtantiate* any charge *inimical* to my character. And ſince you are pleaſed to be *productive*, I am *bold to ſay*, that ſome of our beſt critics *ſcout* and *reprobate* your yahoos with the moſt *marked* energy; complain, that they *feel* ſqueamiſh when they think of them; and *have the idea* that deſcriptions of that *deſcription* can be agreeable to readers of no *deſcription*. I have heard one author, whoſe name has long been *inregiſtrated* in the annals of literature, affirm that they are *diſguſting to civilization*. A juſtice of peace of my acquaintance *committed himſelf*—

Swift.—The deuce he did! The laws, as well as language of England, muſt be greatly changed of late years. Go on, ſir, perhaps I may at laſt underſtand you.

Bookſeller.—I ſay, the juſtice *committed himſelf*, that he would prove your diction as well as imagery to be low and vulgar; that it has nothing of the *ton* in it, no long ſonorous phraſeologies, no appearance of your being *conversant* in ancient or foreign language; nothing, in a word, but what the common people may underſtand, as well as the moſt learned men in the kingdom.

Swift. Was there ever ſuch a fellow? Hark you, ſir, do you know whom you ſpeak to, or what you are ſpeaking?

Bookſeller.—Moſt *decidedly*, ſir; but *fellow me no fellows*, if you pleaſe. Your writings, however great their *publicity* may once have been, *have had their day*; they are now a *bore*, ſir, a mere *boar*, I *took more money* laſt winter by the *Sorrows of Werter*, than I have *taken* by a ſeven years ſale of the lucubrations of Swift.

Swift.—*Werter!* What is that?

Bookſeller.—Have you never heard of Werter? What an illiterate out-of-the-way world is this! You can have no *faſhion* among you: nothing *clever* or *ſentimental*, nothing that *implicates reciprocity* of the finer feelings. Why, ſir, Werter is one of the moſt *eventful* and *impreſſive* of all our *novel* novels; the demand there is for it *out-bounds* your comprehenſion. You ſmile; but what I ſay is a *truiſm*. If you would *be agreeable* to hear, I would give you a *ſtatement* of ſome particulars. Werter is a true hero, and in his *line of conduct*, as a perſon of the higheſt honour and faſhion, moſt *correct*; though a German by birth, he muſt have kept the beſt company in France; and ſo extraordinary a ſcholar, that he actually carried a Homer, a Greek Homer, ſir, in his pocket. But misfortune *ingurgitated* him in the very loweſt ebb of diſtreſs. His affections were *captured* by a neighbouring gentleman's lady, with whom he wiſhed to have a *ſentimental arrangement*, a little *flirtation*— (you underſtand me) an *affair of gallantry*, I mean; and whoſe cruelty *fractured* the good young man's heart, and made him *temerariouſly* put a termination to his *exiſtence*.

Swift.— *(to* Mercury *entering)* You come in good time, Mercury. Our friend Horace ſays you were famous in your day for eloquence; perhaps you may be able to interpret ſome of this learned perſon's gibberiſh. He was ſpeaking of one Werter.

Mercury.—I overheard all that paſſed, ſo you need not recapitulate. Thoſe ſame Sorrows of Werter I have ſeen. Werter tried to corrupt his neighbour's wife, and not wholly without ſucceſs; but, finding the lady not quite ſo forward as he wiſhed, he

left her in a rage, blew out his brains with a piſtol, and (if we may believe ſome men of rhime, who have been whimpering on the occaſion) went incontinently to heaven.

Swift.—Is it poſſible that ſo filly a tale can be popular?

Mercury.—It is poſſible, for it is true; or, as this gentleman would perhaps ſay, is a *truiſm*.

Swift.—I am glad I have got out of that vile world. It was in my time ſo bad, that I fooliſhly thought it could not be worſe; but now it muſt have renounced both common honeſty and common ſenſe. But whence comes it that I underſtand ſo little of this man's Engliſh?

Mercury.—Would you have Engliſhmen of the preſent age ſpeak the language of queen Anne's reign?

Swift.—Certainly. Why did Addiſon, and I, and ſome others, take ſo much pains to improve and fix the Engliſh tongue? Should we have done that, think you, if we had imagined that, in ſo ſhort a time, it would be ſo miſerably altered and debaſed? But who are they who thus take it upon them to diſfigure the language; and by ſo doing to diſcredit the literature of England? Not, ſurely, the moſt reſpectable part of the community. Men of true learning and good judgment are anxious to preſerve the purity of language. Thoſe barbarous idioms I take to be the manufacture of illiterate and affected perſons, who miſtake grimace for elegance, and aſſume the appearance of learning becauſe they know nothing of its reality.

Mercury.—You are a pretty good gueſſer, my old friend. But you muſt know there is now, in the world you left, a moſt vehement rage of innovation in language, government, religion, and every thing elſe. That a thing is new, is now a ſufficient recommendation, however inconvenient it may be, however unnatural and unſeemly; nay the more unnatural it is, the better chance it has of coming into faſhion. On the Britiſh ſtage, with infinite applauſe, young and beautiful actreſſes, perform ſometimes the parts of highwaymen; and ſome ſinging actors ſquall in an affected voice reſembling, and intended to imitate, that of women: the moſt humorous dramatic pieces are frittered away into ſongs; and I ſhould not be ſurpriſed to hear, that henceforth Miranda and Juliet are to be perſonated by grim-viſaged grenadiers ſeven feet high, and Falſtaff by a ſlender miſs juſt entered her teens; that Hotſpur and Henry of Monmouth are to fight to the tune of Lillibullera; and that Hamlet and Cato will ſing their reſpective ſoliloquies in a dance accompanied with a Scotch bagpipe. Similar remarks I could make on other public exhibitions. The pulp—

Swift.—We will, if you pleaſe, defer thoſe to another opportunity. In the meantime I wiſh to hear more particulars of the degeneracy of the Engliſh tongue, and of the principles on which it ſeems to have been conducted. It is a ſubject, you know, which engaged my attention not a little, while I was on the earth.

Mercury. Would you have me give you the arrangement and natural hiſtory of chaos? However, though I cannot pretend to enter minutely into ſo complex a buſineſs, I ſhall offer a few directions, which would enable you, if you were ſo diſpoſed, to make Engliſh *of the neweſt and beſt pattern* as well nearly as this learned bookſeller.—My firſt rule is a very comprehenſive one: 'Avoid ſhort words as much as poſſible, however ſignificant and well-ſounding, eſpecially if they be of Engliſh or Saxon original, and univerſally underſtood; and, in order to raiſe admiration of your learning, uſe, in their ſtead, longer words derived from the Greek, Latin, or French. Inſtead of life, new, wiſh for, take, plunge, &c. you muſt ſay *exiſtence, novel, deſiderate, capture, ingurgitate*, &c. as,—a fever put an end to his *exiſtence*——

Swift.—But that would mean—annihilated him both body and ſoul.

Mercury.—True; but language is

not now thought the worſe for being ambiguous; and ambiguity of manner is not in leſs requeſt than ambiguity of phraſe: it is conſidered as a proof of conſummate urbanity, when a writer, even a writer of hiſtory, and of ancient hiſtory too, ſo diſguiſes himſelf, that his reader cannot find out whether he be in jeſt or earneſt. Beſides, I need not tell you, that by many genteel people death and annihilation are ſuppoſed to be the ſame thing.

Swift.—Proceed, if you pleaſe.

Mercury.—Inſtead of a new faſhion, you would do well to ſay—a *novel* faſhion; for this looks like French, and this by the common people will not be underſtood. For the ſame reaſon, and to ſhew your ſkill in the Latin tongue, ſay, not—I wiſh to be quiet, but—I *deſiderate* quietneſs, or rather *quietude:* and you muſt on no account ſpeak of taking the enemy's ſhips, towns, guns, or baggage; it muſt be *capturing*. About twenty years ago, when this word was imported, I heard a ſurly Engliſh ghoſt remark, that ſince his countrymen had learned to talk of *capturing* ſhips, they ſeemed to have loſt the art of taking them; but Rodney and Hood have ſince proved that he was miſtaken.

Swift.—You mentioned *plunge* as an unfaſhionable verb.

Mercury.—*Ingurgitate* is more genteel; becauſe it is long, uncommon, and ſonorous, and to thoſe who have no Latin utterly unintelligible. He was *ingurgitated in the loweſt ebb of diſtreſs* is fine language.

Swift.—*Ebb*, that muſt mean *abatement* of diſtreſs.

Mercury.—Formerly it might have been ſo; but you may now ſee *loweſt ebb* uſed for *greateſt depth*, and it is thought elegant, becauſe new. I know not whether I mentioned *fort* and *kind* as unfaſhionable nouns; they are quite vulgar: *deſcription* being longer, and of Latin original, is thought much better than either, whatever harſhneſs or confuſion it may occaſion. Our friend the bookſeller gave a good example, when he ſaid, of your deſcription of the yahoos, that deſcriptions of that *deſcription* can be agreeable to readers of no *deſcription*. But of this part of the ſubject we have had enough. Proceed we now, therefore, to rule the ſecond, which is this: 'Always, when you can, prefer figurative to proper expreſſion, and be not nice in the choice of your figures, nor give yourſelf much trouble about their conſiſtency.'

Swift.—That is juſt the contrary of what I uſed to recommend. A few examples, if you pleaſe.

Mercury.—Inſtead of—He ſpoke an hour on various topics, you muſt ſay—*He was an hour upon his legs, and went into a variety of matter:* an idiom which is now very common, and much admired; becauſe it is *figurative*, *verboſe*, and *ambiguous:* three qualities of ſtyle, which are now, among faſhionable writers and ſpeechers, indiſpenſable. Inſtead of—He undervalues his enemies—ſay, *He ſets no ſtore by his enemies*, or rather *he ſets no ſtore by thoſe who are inimical to him. Inimical* is a great favourite, though they who uſe it are not yet agreed about the pronunciation of it. It came in at the ſame time with the verb *capture*, and from the ſame quarter. Unfriendly and hoſtile muſt both give place to *inimical*; the former, becauſe it is mere Engliſh, the latter, becauſe, though of Latin original, it is univerſally underſtood. Inſtead of—At firſt view, you muſt ſay—*At the firſt bluſh of the buſineſs. Hold out* is a figurative phraſe of very general uſe: every imaginable conception of the human mind is now ſuppoſed to have hands and arms for holding out ſomething. Letters from Spain *hold out* an *inimical* appearance. This plan or idea *holds out* great advantages: diſtreſs of mind is *held out* by phyſicians as the cauſe of his bad health. But I ſee you grow impatient, and I ſhall go on to my third rule, of which I gave a hint already. 'Avoid conciſeneſs, and uſe as many words as poſſible.' When you ſpeak of a man's

conduct, you muſt always call it, *his line of conduct*; and inſtead of an authentic narrative—you muſt ſay, a narrative *marked with authenticity*. Indeed the words *line*, *meet*, *marked*, *fall*, *go*, and ſome others, may be uſed on all occaſions, whether they have meaning or not; as—He was received with *marked* applauſe, *marked* inſult, *marked* contempt, *marked* admiration: *meet* your wiſhes, *meet* your arguments, *meet* your ſupport, *meet* your ideas, *meet* your feelings, *meet* you on any ground, &c. Then as to *line*—every thing is now a *line*. You muſt not ſay, he is in the army, but, he is in the *military line*, or in the *army line*; nor, he is bred to buſineſs, but, he is bred in a *profeſſional line*. So, inſtead of, he is a hair-dreſſer, clergyman, printer, perfumer, merchant, fiſherman, &c. you will be laughed at if you do not ſay, he is in the *hair-dreſſing line*, *in the clerical line*, *in the printing line*, *in the perfumery line*, *in the mercantile line*, *in the fiſhing line*, &c. *Feel* has become ſo faſhionable, that your old Engliſh ſubſtantive verbs, *am* and *be* are in danger of being forgotten. Inſtead of—I am anxious, I am afraid, I am diſappointed, I am warm, I am ſick, he is bold, they are aſhamed, the room is damp, the day is cold, &c. you muſt ſay, I *feel* anxious, I *feel* afraid, I *feel* diſappointed, I *feel* warm, I *feel* ſick, he *feels* bold, they *feel* aſhamed, the room *feels* damp, the day *feels* cold, &c. his arguments *went to* prove, &c. Accounts from Spain *go to* ſay that, &c. This, becauſe more verboſe, is thought more elegant than—Accounts from Spain ſay—his arguments proved, &c.

Swift.—Thoſe people ſeem to be put to hard ſhifts to make their books and ſpeeches long and enigmatical. But ſurely ſuch affectation cannot be univerſal.

Mercury.—It is not. In the Britiſh ſenate, and in ſome Britiſh pulpits, you might hear ſtrains of eloquence that would do honour to Demoſthenes, and tranſcend the abilities of Tillotſon and biſhop Taylor. You formerly admired Bolingbroke as a ſpeaker, but were you to hear Mr. P——.

Swift.—Bolingbroke was a ſhallow fellow, though I own he impoſed on Pope and me; but on a better, wiſer, and more learned man than either of us, I mean Arbuthnot, he did not impoſe: the doctor underſtood him well. Bolingbroke's oſtentation kept his ignorance out of ſight, and becauſe he was poſitive, we thought him penetrating. He could turn a ſentence ſo as to make it ſound well; but it was all *words*, *words*, as Hamlet ſays. For my part, you know I never valued thoſe modulated periods, as I think your critics call them; brevity, ſimplicity, and proper words in proper places, form, in my opinion, the perfection of eloquence. But I interrupt you.

Mercury.—I mentioned the neceſſity which an Engliſh writer, who aims at popularity, is now under, of uſing long words: I ought to have added, that it is alſo thought genteel ſometimes to ſhorten ordinary expreſſions. For *reformation* every body now ſays *reform*; this being French, and the other vile old Engliſh: inſtead of—for the future, it is faſhionable to ſay *in future*; and beautiful (or ugly) *to a degree*, inſtead of—to a great degree. The laſt example has alſo the advantage of being elegant on account of its ambiguity: as the following very faſhionable phraſes have, of being not merely ambiguous, but unintelligible: he *ſported fable*, *ſcouted the idea*, *netted a cool thouſand*, has not *made up his mind*, &c.

Swift.—Theſe indeed are ſuch jargon, that I can make nothing of them. But I ſuppoſe they hardly deſerve interpretation.

Mercury.—In elyſium they do not deſerve it: but in Great Britain you would be ſtared at as a prodigy of ignorance and ruſticity, if you ſhould ſeem ignorant of their meaning. I know not whether I told you of a rule, which in the fabrication of this new dialect is much attended to: 'Affect uncommon terminations as much as poſſible.' Inſtead of reference, pre-

ference, commitment, approbation, &c. ſay *referral, preferral, committal, approval*, &c. and the *tranſferral* of property, inſtead of the tranſferring of property. But above all, to ſhow your great learning, affect terminations of a Greek form, as —*iſm* and —*iſt*; as *truiſm* for truth, *agriculturiſt* for huſbandman. Since boxing became a fine art——

Swift.—Boxing is a black-guard art: who made it *fine*, pray? There were ſaid to be only four fine arts; and one of them, *fiddling*. I could never prevail on myſelf to honour that with approbation. I acknowledge only three, poetry, painting, and architecture.

Mercury.—There are many fine arts now: dancing, tumbling, wagering, gaming, legerdemain, horſe-racing, face-painting in both ſexes, cock-fighting, are all fine arts, and hair-dreſſing is a very fine art. But, as I was ſaying, ſince boxing became a fine art, it is quite vulgar to call a profeſſor of it a *boxer*. Some learned innovator, having heard of the Latin *Pugil*, thought of introducing it; but *pugil* was too diminutive a name for a thing of ſuch magnitude; and therefore, clapping to it part of a Greek termination, he made it *pugiliſt*; which being inſtantly adopted by the *dilettanti* (or admirers) of boxing and new words, gave riſe to the adjectives *pugiliſtic* and *pugiliſtical*, as in this example: 'We hear *it is in contemplation* to *run up* a *novel* and *ſuperb* pavilion at New-market for *pugiliſtical* exhibitions.' *Pugiliſticiſm* and *pugiliſticity* have not yet appeared, but are every hour expected, and I will venture to inſure them a favourable reception.

Swift.—Nay, good Mercury, I am afraid you are now going too far, and at your old trade of putting tricks upon travellers. However, I thank you for your information, though you have made me ſick of the ſubject. I ſee my friend Addiſon coming this way; it will require an hour even of his converſation to wear out the diſagreeable impreſſions left in my mind by this abominable detail of vulgarity, pedantry, and barbariſm.

The HISTORY *of* KNOWLEDGE, LEARNING, *and* TASTE, *in* Great Britain, *during the Reign of King* JAMES *the Firſt. Part the Firſt: Concluded from Page* 89.

FROM this period may principally be dated the beginning of a great revolution in the religious ſentiments of the divines of the church of England. The diſcuſſions of the ſynod of Dort, and the vaſt number of publications that followed the meeting of that aſſembly, opened the way for the more ſtrict enquiry into the truth of the ſeveral points in debate. Among the defenders of Arminianiſm exiſted able and learned men, who excelled in a rational and critical explanation of the ſcriptures, and who appeared with eminent advantage in the controverſy. By ſuch advocates many converts were made, and of theſe converts England was not deſtitute. Their number at firſt was ſmall, but it daily increaſed; and, particularly, we believe, in the univerſity of Oxford. Still, however, Arminianiſm was rejected by the great body of the people, both clergy and laity; and in England an odium was attached to it which did not take place in other countries, and which did not belong to it in its own nature. This is ſo curious a circumſtance in the hiſtory of the human mind, and is ſo intimately connected with our main ſubject, that it merits a diſtinct explication.

It is obſervable, that the patriots who diſtinguiſhed themſelves in the parliaments which ſat in the latter end of king James the firſt's reign, and the beginning of Charles the firſt's, frequently in their ſpeeches join popery and Arminianiſm together,

having a connection with each other, and as maintaining principles which were hoſtile to the liberties of the nation. In a proteſtation which was made in the houſe of commons, on the ſecond of March, 1628-29, and which was the reſult of a ſpirit that had been operating for ſome years back, one article was as follows:—'That whoſoever ſhall bring in innovation in religion, or by favour ſeek to extend or introduce popery or Arminianiſm, or other opinions, diſagreeing from the truth, or orthodox church, ſhould be reputed a capital enemy to this kingdom and commonwealth.' To any man who is not accurately acquainted with the hiſtory of theſe times, it may appear ſtrange that Arminianiſm ſhould thus obnoxiouſly be joined with popery: but a due attention to that hiſtory will explain the fact. The puritan miniſters were almoſt univerſally very zealous Calviniſts. Having been much perſecuted, and deprived of the liberty of preaching, they were obliged to betake themſelves to different employments, or to ſeek for ſhelter in the houſes of pious and beneficent perſons, who approved of their principles, or eſteemed their characters. Many of them were taken by the nobility and gentry into their families, with the purpoſe of educating their children. To this they were induced not only by the learning of the puritan miniſters, in which they ſhared with the reſt of the clergy, but by their ſeverity of manners. The puritan miniſters, having gotten ſo important a buſineſs into their hands, would not, we may be aſſured, neglect the opportunity of inſpiring their pupils with their own views of things; and this they did with regard to theological as well as political ſubjects. They were eſpecially careful to lead the young men under their tuition into a great averſion to Arminianiſm. There were two circumſtances which, at that period, contributed to render Arminianiſm peculiarly hateful. One of theſe was, its imagined conformity to popery in the article of juſtification. It is, not, indeed, true that the Arminians, as ſuch, could reaſonably be conſidered as entertaining any opinions which favoured the abſurd doctrines of the papiſts concerning merit, and works of ſupererogation. It was, however, then generally believed that they did; and popery, with the greateſt reaſon, was looked upon in ſo dangerous a light, that it is not ſurpriſing that every thing which was thought to come near it excited a ſimilar alarm and averſion.

Another circumſtance, which contributed ſtill more to a diſlike of Arminianiſm, was the real character of moſt of the Arminian clergy, and eſpecially the dignified part of them, during the reigns of king James and king Charles the firſt. The Arminian clergy of that time were, in fact, the clergy who approached the neareſt to the church of Rome, in their fondneſs for eccleſiaſtical power, oſtentatious ceremonies, and other things which wore a popiſh aſpect. They were the men who appeared the moſt deſirous of accompliſhing ſome kind of union with that church. Beſide this, they were the great aſſerters of regal prerogative. Several of them went even ſo far as to aſcribe to the prince an abſolute uncontrollable authority; an authority by divine right, which ſet him above all parliaments, and all law. This was the caſe with Laud and others. The Arminian clergy, therefore, being actually of this ſtamp, jealouſy and diſlike were naturally conceived with reſpect to their theological principles; though their theological principles, ſo far as related to the particular doctrinal tenets of Arminius or Epiſcopius, had no real tendency to promote popery and arbitrary power. There are ſome authors, indeed, who appear to be of a different opinion; but without good reaſon. The ſentiments which a perſon may entertain concerning election, grace, univerſal redemption, perſeverance, and matters of a ſimilar nature, whether on the Calviniſtical or

Arminian ſide of the queſtion, cannot, of themſelves, be conſidered as favourable either to eccleſiaſtical or to civil tyranny. The connection which, at the period we are ſpeaking of, and in this kingdom, ſubſiſted between Arminianiſm and arbitrary principles in church and ſtate, was owing to peculiar circumſtances. It aroſe partly from Laud and his friends happening to be Arminians, while, in other reſpects, they were abetters of the abſolute power of the prince; and partly from the critical ſituation of the Arminian clergy. Theſe clergy were ſuppoſed to have the eſtabliſhed articles of the church of England againſt them, and it is certain that the ſtream of the people did not run in their favour. They betook themſelves therefore to the protection of the ſovereign; and, in order the more fully to obtain that protection, zealouſly fell in with all his prejudices; which was the eaſier to them, in conſequence of having been themſelves educated in narrow views both of religious and civil polity. They had reaſon, likewiſe, to apprehend, from the averſion which the patriots had conceived againſt them, that they would be brought into a ſtate of perſecution, if the oppoſition to the crown ſhould prevail; and this apprehenſion would almoſt unavoidably throw them ſtill farther on the other ſide.

The ſituation of things in the United Provinces was directly the reverſe. There the Arminians were the patriots, and oppoſed the arbitrary deſigns of the houſe of Orange; while the Calviniſts were zealouſly devoted to the princes of that family, and too much favoured them even in their unjuſtifiable purpoſes. The remonſtrants, Barnevelt and Grotius, were ardently attached to the liberties of their country, and eminently ſuffered in the cauſe; the firſt unto death. This happened at the very period in which the Arminians in England began to be peculiarly obnoxious to their countrymen, on account of their attachment to regal prerogative and prieſtly dominion; and it is a deciſive proof that Arminianiſm has no neceſſary or natural connection with tyranny or with popery. It cannot be doubted that there were ſeveral of the Arminian clergy of this nation who were far from entertaining principles which were hoſtile to the privileges of their fellow ſubjects. Mr. John Hales of Eton, and afterward Dr. Jeremy Taylor, had ſuch enlarged ſentiments with regard to religious liberty, that we cannot eaſily ſuppoſe them to have been hoſtile to civil freedom. It is a fact worthy of particular notice, that, during the civil wars, Mr. John Goodwin, who was a bigoted Arminian, was, at the ſame time, a moſt zealous republican, and wrote a treatiſe in vindication of the beheading of king Charles the firſt.

Were it neceſſary, much farther evidence might be accumulated upon the ſubject. But it is ſufficient to appeal to our own times, as an undeniable demonſtration that there is nothing in Arminianiſm which leads a perſon to be a favourer either of popery or of abſolute monarchy. The accidental connection between theſe things, which took place in the reigns of king James and king Charles the firſt, has long been broken. We cannot but be ſenſible, that, whether a man be a Calviniſt or an Arminian, it is of no importance to his political ſentiments. It is a plain fact, that Arminians, in perfect conſiſtence with their peculiar theological opinions, not only may be, but actually are, as averſe to the Roman catholic religion, and to arbitrary power, as any perſons whatſoever.

The laſt public queſtion of a theological nature that was agitated during James the firſt's reign, was concerning the toleration of the papiſts. That they ſhould be tolerated was propounded by the king, and zealouſly oppoſed by Abbot, archbiſhop of Canterbury. Arguments were drawn up on both ſides, and the point was warmly diſcuſſed. The ſcheme, however, was ſoon laid aſide; for it

originated with the Spaniſh match, and with the failure of that match it was finally fruſtrated and defeated.

In looking back upon the ſtate of theological knowledge and learning in this reign, we cannot give it a very high encomium; nor, indeed, does its luſtre ſeem, on the whole, to have been equal to that of Eliſabeth's period. It is not, however, meant to inſinuate, that there was a deficiency of literature. An extenſive acquaintance prevailed with the Hebrew, Greek, and Latin tongues; the fathers and the ſchoolmen were much read; and the ſubjects in controverſy with the papiſts and the puritans employed many a pen. Divines, therefore, there were, who were not a little celebrated in their day; but whoſe names are now deemed of little conſequence, and whoſe works are ſtill more forgotten than their names. The figure that was made by the archbiſhops Bancroft and Abbot did not ariſe from their ſcholarſhip, which was not ſupereminent, but from their concern in public tranſactions. Theſe two prelates were very different in their characters. Bancroft, with ſtrong and active talents, was haughty in his temper, devoted to prerogative, and perſecuting in his principles and his conduct. Abbot, on the contrary, was indulgent to the puritans, and a friend to the liberties of the ſubject. In his doctrinal ſentiments, he adhered to Calviniſm, with ſome degree of narrowneſs; and the diſlike he conceived to Grotius does not reflect much credit on the penetration of his mind. Biſhop Andrews, who was poſſeſſed of great general learning, has been juſtly blamed for the wrong taſte which he introduced into the eloquence of the pulpit. There are, however, proofs in his works, that he could occaſionally riſe above quaintneſſes and falſe wit, and expreſs himſelf with a manly ſimplicity and energy of language. John Davenant, who had been lady Margaret's profeſſor of divinity of Cambridge, obtained conſiderable reputation, eſpecially abroad, by the publication of the lectures which had been delivered by him during his profeſſorſhip. George Carleton was diſtinguiſhed not only by his literature, but by his ſuperiority to ſome of the prejudices of the age in which he lived. He had the good ſenſe to write a book againſt judicial aſtrology. His knowledge was various; and it has been ſuggeſted, that perhaps he publiſhed upon more ſubjects than any clergyman of his time. The ingenious and excellent Dr. Joſeph Hall appertains, as a divine, to the next reign; and to the ſame reign we refer John Hales of Eton, as his ſmall but moſt valuable productions did not appear in the period to which we are particularly confined. The famous Iſaac Caſaubon, who ſettled, was preferred, and died in England, will more properly be noticed under the department of claſſical, critical, and philological learning. Dr. John Donne, though principally known as a poet, is not without ſome title to remembrance on account of his theological writings. His proſe works diſplay the ſtrength of his mind; and, in one of his youthful performances, he extended his ſpeculations to a great freedom of ſentiment. Hugh Broughton might have been mentioned in the laſt reign, though he continued his literary labours in the time of king James the firſt. He was probably the profoundeſt ſcholar of his age in Oriental literature. His productions might to this day have been peruſed with advantage, had they been accompanied with a greater degree of taſte and judgment. Reſiding much abroad, and, at the ſame time, poſſeſſing a remarkable eccentricity of temper, he never roſe to any conſiderable preferment. But the divine, who, in this period, truly ſhone above all his contemporaries, was Joſeph Mede. The extent and depth of his learning were united with a ſoundneſs of judgment and liberality of mind in which few could compare with him. His works are ſtill read, and will continue to be read, by thoſe perſons

who are deſirous of increaſing their ſtore of uſeful literature in general, and of ſcriptural knowledge in particular.

Among the puritan divines of the time, the firſt place ſeems to be due to Dr. John Raynolds, king's profeſſor of divinity at Oxford, who took the lead on the Nonconformiſts ſide of the queſtion, in the conference at Hampton-court. There is an univerſal concurrence of teſtimony to his abilities, learning, and character. What farther recommended him was the moderation of his temper. Though diſſatisfied with the ceremonies of the church, he did not encourage a violent oppoſition to them; and he complied in many things for the ſake of peace. Such was the attachment of Dr. William Ames, to the puritanical principles, that he quitted his native land, and ſettled in the Low Countries; where he flouriſhed many years as profeſſor of divinity in the univerſity of Francker. In this capacity he publiſhed a number of works that were far better known and celebrated abroad than they ever were in England. Henry Ainſworth, a Brownift, and very eager in the contentions of his party, diſtinguiſhed himſelf in a much more honourable manner by his acquaintance with Oriental literature. His commentaries on the five books of Moſes, and on the Pſalms, are ſtill held in reputation for the critical knowledge with which they abound. Ainſworth, as well as Dr. Ames, fixed upon the Low Countries as the place of his reſidence, and was paſtor of a congregation at Amſterdam. The toleration allowed in theſe countries drew thither, likewiſe, Mr. John Robinſon, whoſe name is entitled to remembrance as having been the father of the independants, a ſect which ſubſiſts in great ſtrength and numbers to the preſent day, and the tranſactions of which, during the courſe of the civil war, became of eminent importance both in the political and eccleſiaſtical hiſtory of Britain. Another eminent divine among the puritans, and in the theological world in general, was Mr. Thomas Brightman, who wrote a commentary on the book of Revelation; that book, which hath afforded ſuch abundant ſcope for elaborate enquiry, critical reſearches, and doubtful conjecture. Brightman's work has not been forgotten by the ſpeculatiſts of the preſent day. Mr. Robert Bolton exerted his talents in practical compoſition; and his devout and energetic writings are ſtill read by thoſe who accord with the author in doctrinal ſentiments.

Dr. James Uſher, the eminently learned metropolitan of Ireland; Luke Wadding, the famous Roman catholic divine of the ſame country; and the Forbeſes of Scotland, will demand our attention when we come to the ſucceeding period.

With regard to preaching, a very falſe taſte generally prevailed in the reign of king James the firſt. Many Latin quotations, numerous diviſions, and a great degree of quaintneſs, both in ſentiment and expreſſion, deformed the eloquence of the pulpit. There were few exceptions to this character. Biſhop Andrews we have already mentioned. Another prelate, Dr. Babington, is ſaid to have been happy in raiſing the attention and affections of his audience, which he would keep up till the end of his ſermon. There was a young man among the puritans, a Mr. Ward, of Ipſwich, and who died at the age of twenty-eight years, that diſplayed uncommon genius as a preacher. In his diſcourſes are many bold metaphors, ſtrong and lively figures, and fine ſtrokes of Chriſtian oratory, which prove the eminence to which he would have ariſen, had he lived in a more judicious period. The time in which Engliſh ſermons attained to that ſimple, elegant, rational, and manly mode of compoſition, of which we have now ſuch a number of beautiful examples, was ſtill at a very conſiderable diſtance *.

* Fuller, Neal, Hume, Newcombe, Athenæ Oxonienſes, Biographia Britannica, New Hiſtorical Dictionary, &c.

The OLD SAILOR: *An affecting Story.*

MRS. Smith, who has ſo much diſtinguiſhed herſelf by her Novels and Sonnets, has lately preſented ſome affecting pictures of the dreadful conſequences which have reſulted from the unparallelled revolution in France, in a Novel, entitled 'The Baniſhed Man.' We ſhall preſent our readers with an extract from the third volume, in which D'Alonville, the hero of the piece, endeavours to return to his native country, under the diſguiſe of a French republican priſoner eſcaped from the Auſtrians, in order to find out, if poſſible, his two friends, De Touranges and St. Remi, and to ſee what advantages might be derived from the ſtate of the royaliſts in France.

D'Alonville's heart revolted as the execution of his ſcheme approached. To enter his native country in diſguiſe; in the mean garb of a peaſant—and repreſenting one of the perſons whoſe politics he deteſted, appeared to him ſo degrading, that he was ſometimes tempted to renounce his plan of ſeeking De Touranges and St. Remi, and enter a volunteer in one of thoſe corps of emigrants that were now aſſembling, and which were to be paid by ſome of the combined powers; but the advice of Elleſmere, and the ſolemn engagement with madame de Touranges, and ſtill more with her daughter, which he thought himſelf bound to fulfil; together with a belief, that if parties could be formed in the interior of the kingdom, it would be of more effectual ſervice than any attempt without—conquered his repugnance, and he determined to purſue his firſt intention.

He had a long journey to make through the whole of Picardy and Normandy; and every precaution was neceſſary to ſecure his reaching the place of his deſtination. To appear as a priſoner eſcaped from the Auſtrians, ſeemed to be the leaſt objectionable means of making his way back to his own country. He found that there were priſoners confined at Bruges; he went thither, and found it eaſy to procure a ſort of certificate, from one of them, with his name, and that of the national regiment in which he ſerved. He made himſelf maſter of the circumſtances that happened when this man and a party of French were taken priſoners; and arranging the ſtory he ſhould have to tell, he furniſhed himſelf with a number of ſmall aſſignats, which he placed in the linings of his clothes; and depoſiting what other money he had in ſafe hands at Oſtend, he departed thence on an evening, and took the road to Dunkirk. His former walk to Roſenheim had given him conſiderable experience, and he reached Dunkirk without any difficulty. The examination he underwent there, was more ſtrict than he expected: but certain of not being perſonally known, and having taken every precaution againſt being ſuſpected for a gentleman, he anſwered the enquiries that were made, with ſo much clearneſs, that he was believed, and was offered either the permiſſion of returning to his own province, which he ſaid was Normandy, or to enter into any of the regiments at Dunkirk. He told a very plauſible ſtory of an old mother; and of his other brothers being all killed in the ſervice; which was alſo believed; and he even received a certificate from the commanding officer of the town, granting him a furlough for ſix weeks, and deſcribing him as Jacques Philippe Couté, ſerving heretofore in ſuch a regiment; lately eſcaped from impriſonment; who had deſired leave to reviſit his family before he returned to the ſervice of his country. Thus provided, and having well ſtudied the cant of the day, he embarked at Dunkirk, in a ſmall ſloop, for St. Maloes. The firſt two days the voyage was proſperous; but

on the third, they were chaſed by an Engliſh privateer, of which a few were already fitted out; and D'Alonville, as the veſſel gained upon them, felt inconceivable uneaſineſs from the apprehenſion of being taken, and carried to an Engliſh priſon under circumſtances ſo degrading, that it would be almoſt impoſſible ever to vindicate himſelf to his Engliſh friends. When he had for more than an hour ſuffered an alarm, that he dared not avow, it fortunately abated by a change of the wind, which enabled the ſloop in which he was, to run into Cherbourg; and D'Alonville, thinking himſelf moſt fortunate to eſcape ſuch a return, to a country where his only hopes of happineſs were fixed, would not again ſubject himſelf to the ſame danger, but quitted the ſloop, and hired a ſmall boat under pretence of diſpatch, which he knew muſt keep along ſhore; and the maſter of which agreed for a very ſmall conſideration to land him at St. Maloes; from thence to the town of Merol which St. Remi had named for the place of their rendezvous, was about five-and-forty or fifty miles; ſituate on the extreme edge of the province of Britanny.

It was in an afternoon, toward the middle of March, that D'Alonville went on board a long fiſhing-boat, rowed by an old, but athletic inhabitant of Cherbourg. With the aſſiſtance of a lad of thirteen, they kept as cloſe to the ſhore as poſſible; and as night came on, hauled ſtill nearer to the rocks; as they intended, in caſe of bad weather, to land: but the evening was calm and ſerene: and the owner of the boat, who appeared to have ſome other buſineſs at St. Maloes, beſide conveying D'Alonville thither, was diſpoſed to make the moſt ſpeed in his power; and the wind was fortunately in his favour, and filled his little ſail with a ſteady breeze. D'Alonville, who had taken his paſſage as a man from the northern army, who had been a priſoner eſcaped to Dunkirk, and was now ſent by the commander to St. Maloes on public buſineſs, had been ſo fatigued by the repetition of this fiction, and ſo reluctantly acted the part it impoſed on him, that having once given this account of himſelf to his conductor, he did not wiſh to enter into farther converſation; being but too well aſſured, that in anſwer to any queſtion he might aſk, as to the ſtate of the country, or the diſpoſition of its inhabitants, he ſhould hear nothing but what would add to the painful ſenſations with which he approached it.

It was midnight; a few ſtars, and a waning moon already fading in the diſtant waves, afforded all the light they had. The old ſeaman kept at the helm, frequently fortifying himſelf with a cordial of Eau-de-Vie, reinforced with repeated quantities of tobacco. The boy was ſleeping on a bench that croſſed the gun-wales; and the ſilence of the night was unbroken, ſave by the roar of the ſurf on the beach, which they were near enough diſtinctly to hear in a dull and hollow murmur. Uneaſy as were the thoughts of D'Alonville, this monotony of ſounds, and the fatigue he had for ſo many days gone through, together with the ſuppoſition that he was now at leaſt in temporary ſecurity, induced him to indulge the heavineſs that was coming upon him. Since he had eſcaped any ſuſpicion as far on his way as Cherbourg, he had there ventured to purchaſe a ſmall pair of piſtols, which he concealed within his waiſtcoat. He knew his companions thought him unarmed, and he was not ſorry to be provided with theſe as a defence; not that he ſuſpected him of any intention to take advantage of that circumſtance, but there was a ſullen ſilence about the old man that did not altogether pleaſe him; and he had more than once occaſion to remark, how much ſince the revolution the character of the lower claſs of the French people were changed. Notwithſtanding the little confidence he had in his boatman, he put on the red cap with which he had provided himſelf, and wrapping his coarſe coat round him,

he ſoon fell aſleep; from which he was, after ſome time, ſuddenly ſtartled, by the noiſe of fire arms, which appeared to be ſo near him, that he ſprang upon his feet, and looked round him; but all remained juſt as it was before forgetfulneſs overtook him; except that the veſſel was immediately beneath the high cliffs that bound the land. The old ſeaman was at the helm, but he had lowered his ſails; and the boy paddled the boat along, while he guided it ſlowly among ſome high pointed rocks that ſeemed to riſe here perpendicularly out of the water, which was deep, and ſtill around them.

D'Alonville aſked, haſtily, where they were? And what was the noiſe they heard? The man anſwered, in a mournful and reluctant ſort of way, that they were cloſe under the town of Granville, on the weſtern coaſt of Normandy: 'And for the noiſe,' ſaid he, 'they are at the old buſineſs, I ſuppoſe, killing ſome of the people who happen to have ſaid or done any thing againſt the new government.' This opinion ſeemed to be founded in truth; for the cries of the victims, and the ſhouts of the executioners, were diſtinctly heard after another volley of fire-arms. D'Alonville ſhuddered, yet felt half impelled to leap on ſhore, and throw himſelf among the demons who were buſied in this work of death. 'Are you going to land?' enquired he, as the boat ſtill ſeemed to get near the ſhore. 'Have you any buſineſs in this town?'—'Who, I?' replied the man:—'No, thank the bon Dieu, I have no buſineſs there, and I aſſure you, no mind at all to be among them.' 'Are they then bad people in this town of Granville? What! are they royaliſts, my friend? Are they enemies to liberty?'

'Liberty! liberty!' muttered the man, with an oath half ſtifled—'Liberty! but you have been in the midſt of all, it ſeems—and like it, I ſuppoſe—though one would think you muſt have had pretty near enough of it—Sacre Dieu! but one muſt hold one's tongue.'

'Why, how is this?' ſaid D'Alonville, agreeably diſappointed in the principles of his ſea-faring companion. 'Why are you not a friend to the republic—to our glorious new privileges? Why, is it poſſible you can ſpeak thus of our conſtitution, of our liberty?'

'Bah!' cried the old man, peeviſhly. 'Tell me what good we have got by it.'

D'Alonville enumerated the advantages that have been held out, in all the parading terms with which they have been dreſſed to catch the multitude. 'Ah! yes, to be ſure,' anſwered the ſailor; 'Now I'll tell you what I have got by all this, mort Dieu! I have been out of luck, ſure enough, if ſo many bleſſings were going about, to have caught none of them; but, on the contrary, diable! I've had nothing but plagues and ſorrows; but I ſuppoſe, if I complain to you, monſieur le Soldat, I ſhall be clapped up in priſon as ſoon as you catch me on ſhore.'

'If you think ſo, friend, don't truſt me with your confidence; but I aſſure you, though I am a ſoldier, and have been at the army, that I don't want to hurt any man for his opinions.'

'I don't much care,' ſaid the man; 'I'd as ſoon go to the guillotine, I think, as not, unleſs times mend.' 'I am ſorry,' cried D'Alonville, 'they are ſo bad with you; but what have you particularly to complain of?'

'Why, in the firſt place, I had four ſons, grown up, fine young men as I ever ſaw; the ſhorteſt of them was as high as you are, and ſtouter; the eldeſt of them belonged to a merchantſhip that traded to the iſlands—he was killed by the black people at St. Domingo. The ſecond was in the king's ſervice—an excellent ſailor—he was forced, whether he would or not, to ſea in a republican veſſel;

and it is only a fortnight ſince I have known that he has been taken by the Engliſh, and is now in an Engliſh priſon, poor lad! and they ſay that the Engliſh, who, when I was a priſoner among them in the laſt war, treated us very well, and even gave me my parole, ſo that I ſuffered little, are now grown very ſevere, and endeavour to make confinement as bad as it can be; ſo I think I ſhall never ſee my ſon again.' 'You ſerved then in the laſt war?' ſaid D'Alonville. 'Yes,' replied the old man; 'and was in two or three engagements; in the laſt I was a boatſwain, by favour of my commander, who, when we were exchanged, and went back to France, took me particularly under his protection; and my wife was received into the family of his lady, who brought up my daughter; my poor dear girl!'

'You have not been unfortunate in regard to her too, I hope,' ſaid D'Alonville.

'Ah!' cried the ſailor, with a deep ſigh, 'that is what hurts me moſt of all—but I will tell you how it happened:—my third boy, a fine fellow of nineteen, was taken when he was quite a child into the ſervice of my commander, and brought up to be his ſervant. Alas! he was with him when he was ſeized and carried to priſon on the fatal ſecond of September; and he periſhed with him in the Abbaye. The fourth, who was but a year younger, was ſo enraged at this injuſtice and cruelty (for what had Michel done that deſerved death?) that he quitted the revolutionary army where he had entered, and went to ſerve under the princes in Flanders; where, I believe, he fell the end of laſt year in the retreat, for I have never heard of him ſince.'

The poor man was ſo affected, that his voice failed him.

D'Alonville, however fearful of betraying himſelf, could not conceal that he ſympathiſed with this unfortunate father. 'Perhaps,' ſaid he, 'your fears may be groundleſs; though you have not heard from him, your ſurth ſon may ſurvive.'

'I have no hope,' he replied; 'had he not been dead, I am very ſure he would have found ſome means of letting me hear of him; for he was a dutiful boy, and knew what his mother and I ſuffered about his brothers—Ah! no; I have none left now, unleſs Pierre ſhould ſurvive a long impriſonment: I have none left but that lad you ſee there; and as ſoon as he is old enough to carry arms, he too will be put under requiſition, and be compelled to ſerve, whether he likes it or no.'

'But your daughter,' ſaid D'Alonville—

'My daughter,' reſumed the poor man; 'my daughter was the hope of my life; my commander's lady took her, and brought her up to be about her perſon; and ſhe was pretty, and every body admired her; a reputable tradeſman at Paris would have married her, but madame de Blanzac, her miſtreſs, thought her too young, and deſired her to ſtay a year or two, till her lover was got a little forwarder in the world. She was at Paris at the dreadful time when her poor brother was murdered; ſhe was not indeed in priſon, but remained with her miſtreſs at an hotel, where ſhe ſaw four people killed before her eyes; ſhe was ſo terrified, as to be immediately deprived of her ſenſes, and was rather, I fear, a burden, than of any uſe to the lady ſhe ſerved—when ſhe found means to eſcape to England, after the murder of her huſband. During the voyage, my poor girl recovered ſome recollection; but on the veſſel's arriving in the port of Pool, where they were to land, the cries of the ſailors, and the loud voices of the people who ſurrounded the ſhip, brought ſo ſtrongly to her mind the noiſes ſhe had heard at Paris during the maſſacre, that in the frenzy which this terror occaſioned, ſhe flew upon deck, and, before any one was aware

of what ſhe intended, ſhe threw herſelf* into the ſea.

A dead ſilence enſued for a moment; the old man could not proceed.

D'Alonville, at length, ſaid, 'And was there no attempt made to ſave her?'

'Oh! yes,' replied he; 'and ſhe was ſaved from the water, but her ſenſes were quite gone. I do not know how madame de Blanzac, diſtreſſed as ſhe was herſelf, was able to ſuſtain the additional burden of my poor girl, in ſuch a condition; but ſhe promiſed never to forſake her, and ſhe kept her word. Some ladies in England, to whom her melancholy ſtory became known, were very kind to my unfortunate daughter, and tried to get her reſtored to her ſenſes, but it was all in vain; they were irrecoverable; and ſhe is now in one of the public hoſpitals of London, where lunatics are received.'

The laborious life to which the old ſailor had been inured, had not hardened his heart—Nature had ſtill a powerful influence; and his voice bore teſtimony to the tribute he paid it, as he thus concluded his mournful narrative.

D'Alonville would have ſpoken comfort to him, but he could find none. Theſe wounds to domeſtic happineſs he knew could not be cured. He remained ſilent, therefore, reflecting on the dreadful havoc that civil war had made in his country within ſo ſhort a ſpace; and he ſhuddered when he truſted his imagination for a moment with the horrors that were yet to come. He was now aſhamed of having ſuſpected his conductor of deſigns againſt him, and of having miſtaken the ſad ſilence of ſorrow, for the ſullen meditation of the aſſaſſin. They were, by this time, at ſome diſtance from the place where the report of fire-arms had been heard; and D'Alonville, endeavouring to ſhake off the melancholy impreſſion his companion's hiſtory had left on his mind, enquired why he had kept his boat ſo near the ſhore as they paſſed under the rocks of Granville?

The ſailor replied, 'that there were frequently centinels placed on the cliffs, to prevent thoſe from eſcaping who were called diſaffected; and that had the boat been diſcerned, or heard, they would have been fired upon with very little ceremony; but that under the cliffs they were leſs likely to be perceived.

D'Alonville then entered into converſation on the preſent appearance of France, and received an account of the deſolation that reigned throughout the northern provinces, which, when he landed, and ſurveyed the ſtate of the ground, did not appear to have been exaggerated.

Without hazarding too much by confidence in his boatman, they became much better acquainted before they had finiſhed their voyage; D'Alonville diſcovered, in the courſe of their converſation, that his conductor would more willingly put him on ſhore at any place near St. Maloes than in the port; and D'Alonville was much more willing to land in ſome remote part of the coaſt. They therefore perfectly agreed in their plans, and keeping at ſome miles diſtance from land the whole day, as if they were engaged in fiſhing, as night approached they drew toward the ſhore, about five miles to the weſt of St. Maloes; where, in a ſmall creek, formed by projecting rocks, they might land, and by a winding path gain the country.

The wind, which had hitherto been extremely favourable, ſtill blew to the ſhore; but it had riſen as the ſun ſet, and the water, curling and whitening as it rolled toward the beach, threatened an approaching ſtorm. The veſſel, therefore, could carry no ſail; and the old man taking in his canvas,

* This ſtory, I have been aſſured, is fact—and that the melancholy circumſtance here related, happened to a young woman in a ſituation of life ſomewhat ſuperior to that of the perſon to whom they are here given.

rowed ſlowly and laboriouſly toward the point where they had agreed to land. As the boat mounted the dark waves, or ſunk between them, and as the coaſt before him roſe indiſtinctly, or wholly diſappeared, D'Alonville could not help reflecting on his ſtrange ſituation, returning thus to the land of his anceſtors. The cliffs, whoſe rugged forms were diſtinguiſhable through the gloom of evening, were the boundaries of Britanny! Once before he had ſeen them in returning from an excurſion of pleaſure, when in his early youth he had, with his father, viſited Breſt, and gone back by water with ſeveral ladies and friends. He recollected all the parties; not one, perhaps, now ſurvived, unleſs it was his brother, of whom he dreaded to hear; but with whom, in the part of Britanny to which he was going, he comforted himſelf that it was improbable he ſhould meet. At length, with very painful emotions, he ſaw himſelf once more on ſhore on the coaſt of France. He paid his conductor more than their agreement, and took his name, and the name of his ſon, whom he ſuppoſed to be a priſoner in England. There was a poſſibility that ſhould he ever return thither, he might find the young man living, and relieve the anguiſh of his unfortunate father, to whom, however, he forbore to hold out a hope that might never be realiſed.

A curious ANECDOTE *of* PAINTING.

IN the church of St. Peter, in the city of Cologne, is one of the moſt celebrated paintings of the Flemiſh ſchool. It invites that attention, which both its worth and its hiſtory claim, by affecting concealment; being hid from vulgar and unappreciating eyes by a curtain, which is never removed without paying a gratuity to the intendant.

It is a celebrated performance of Rubens, who was a native of this city. It was, in his own eſtimation, one of his beſt pieces, which he painted with particular care and exertion, in compliment to the church where he received baptiſm, and which he preſented, at the time he claimed a copy or certificate from the baptiſmal regiſter. It repreſents the Crucifixion of St. Peter, to whom the church was dedicated, and is much admired both for its expreſſion and colouring. The body of the apoſtle is in an inverted direction. The tenſion and relaxed ſtate of the different abdominal muſcles, which are delineated, in order to expreſs, if the phraſe may be uſed, a languid curvature, are worthy the pencil of this maſter. Anguiſh is ſtrongly marked in every feature, and particularly by the mouth: yet it is admirably blended with firmneſs and pious reſignation. It was painted in 1642, and yet the colours are freſh and vivid.

The mercenary directors of the church, at that period, ſo far from receiving this ſplendid gift with the gratitude it merited, manifeſted a diſcontent, that the donation was not of a pecuniary nature. Propoſals were made by ſome of the more ſordid, to return a preſent that was of perſonal advantage to no one. But this motion was over-ruled. Rubens, being informed of the conteſt, offered them ſeveral thouſand crowns if they would return it; it is ſaid, no leſs a ſum than *twenty-eight* thouſand. The poſſeſſors, ſtill conſiſtent with themſelves, concluded immediately, that the artiſt muſt conſider this piece to be inimitable, or he would have painted its fellow, rather than part with ſo large a ſum. The price offered, as is too frequently the caſe with profeſſed connoiſſeurs, gave them more exalted ideas of its merits than their eyes or judgment could have diſcovered. They became, at once, *Men of Taſte*; and the painting has, ever ſince, been treated with becoming reſpect.

...e's Evaporator.

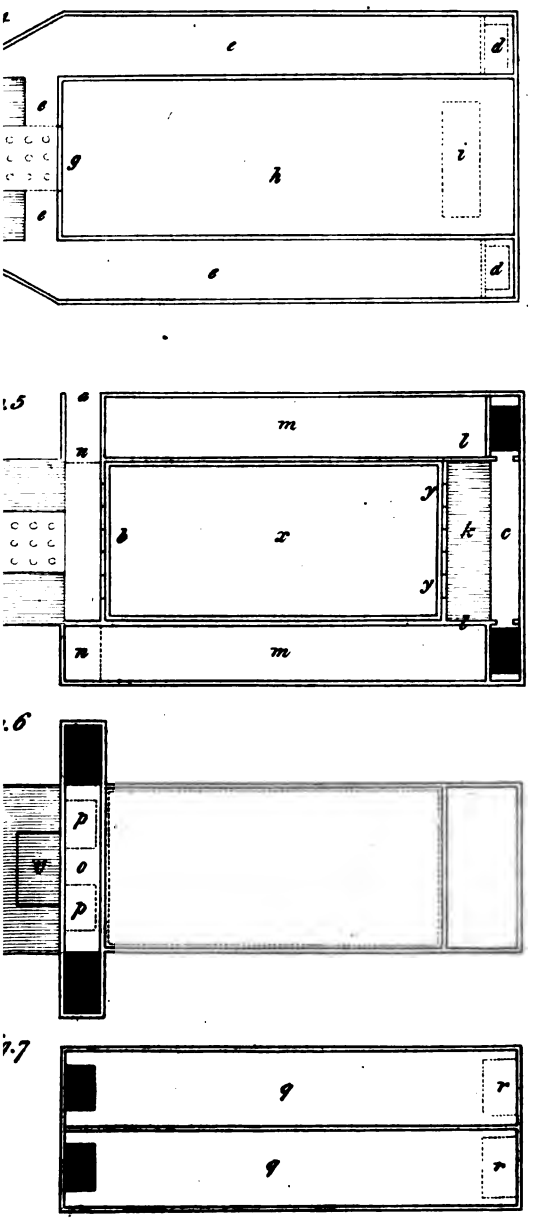

ACCOUNT *of an* EVAPORATOR, *on a new and ingenious Conſtruction, for the Uſe of Chymiſts and Preparers of the various Kinds of Salts, by Mr.* Henry Browne *of* Derby, *for which the Society for the Encouragement of Arts, Manufactures, and Commerce, voted the Gold Medal to that Gentleman: In a Letter to the Secretary.*

SIR,

I HEREWITH ſend you a plan and model of a furnace I uſe for evaporation, and have found more ſerviceable for that purpoſe than any copper or boiler I ever ſaw; and I am of opinion it might be advantageouſly applied to the drying malt, as the heat is more equally diſperſed, and the vapour carried off, much quicker than by the mode now practiſed. I have not obſerved the exact quantity of moiſture which may be exhaled in a given time by a given quantity of fuel; but I can with ſafety ſay, that at leaſt one half of the fuel, and a great deal of trouble, is ſaved by this contrivance; as it does not require near the attendance that boilers in general do, in ſupplying it with liquor or fuel, which need only be done twice in twenty-four hours; for the fire, being confined in the firſt inſtance to the bottom, and the evaporation being regular, a certain quantity either of fuel or liquor may be put in at certain times: but the greateſt advantage this furnace poſſeſſes, and the only part I flatter myſelf may be called new, is, the atmoſphere being rendered of an equal heat with the liquor; by which means more moiſture is carried away by the current of hot air, than by any other means I am acquainted with.

The utility of this evaporator, therefore, is in my opinion twofold: firſt, the evaporation is much quicker, with a leſs quantity of fuel, than in the generality of the boilers now in uſe; ſecondly, the operator, as well as the whole neighbourhood, cannot in the leaſt be affected or annoyed, let the vapour or ſteam be ever ſo pernicious. That evaporation is much greater by this mode, will appear very plain, when the courſe of the heat is pointed out: it is firſt carried under the veſſel, then reverted back on the ſides, and finally it is carried over the ſurface; by which means the air, that is in contact with the liquor, is ſo heated and highly rarified, that the fluid is raiſed into vapour or ſteam, much quicker, and with leſs fuel, than if the atmoſphere was cold; and, as the air neceſſary to keep the fuel in combuſtion paſſes over the ſurface of the liquor, every pernicious vapour is carried with it into the fire, where it is decompoſed, or at leaſt ſo changed as to be no longer pernicious.

As the diminution of labour in all operations is ſo much to be wiſhed, I think it neceſſary to add, that by this contrivance one man can do more work than three can in the uſual method, the fire-place being ſo contrived, that as much fuel may be put on at one time as will ſerve twelve, or even twenty-four hours; and the ſame may be ſaid of the ſupplying the veſſel with freſh liquor. I am, ſir, &c.

HENRY BROWNE.

Derby, Jan. 31, 1794.

Mr. MORE.

EXPLANATION of the PLATE.

Fig. 1. Is a view of the whole furnace or evaporator complete.

Fig. 2. A ſection lengthwiſe of the boiler, fire-place, &c.

Fig. 3. A tranſverſe ſection of the boiler and flues, looking toward the fire-place.

Fig. 4. A plan from A. to B, of fig. 2

Fig. 5. Plan from C. to D.

Fig. 6. Plan from E. to F.

Fig. 7. Plan from G. to H.

a. The opening or hole through which the air enters; and being ad-

mitted through the three holes *b*, *b*, *b*, paſſes over the ſurface of the liquor in the ciſtern or boiler *x*, and then paſſing again by ſimilar openings at the oppoſite end of the ciſtern *y*, *y*, deſcends by the vacuity *c*, *c*, and, by the holes *d*, *d*, is conveyed, by the paſſages *e*, *e*, to the aſh-hole or underſide of the grate, and thus ſerves to actuate the fire, bringing with it the ſteam ariſing from the boiler.

The air and ſteam, having thus ſerved the purpoſe of actuating the fire, are, with the ſmoke ariſing from the fuel, conveyed by the back of the furnace *g*, *g*, under the boiler along the paſſage *b*, *b*; and, riſing through an aperture *i*, *i*, under an inclined caſt-iron plate *k*, *k*, paſſes through two holes, *l*, *l*, into the paſſages *m*, *m*, and riſes, by two other holes *n*, *n*, into a vacuity *o*, *o*, whence it ariſes again by two holes *p*, *p*, enters the flues *q*, *q*, and thence into the chimneys *r*, *r*.

s, *s*. The ſtoking-hole of the furnace.

t, *t*. The aſh-hole.

v, *v*. The opening through which the fuel is put into the furnace.

w. The door, or opening to the ciſtern.

The ſame letters refer to the ſame parts in all the ſeveral drawings.

On the POETICAL CHARACTER *of* AKENSIDE.

A New edition of The Pleaſures of Imagination, by Dr. Akenſide, has juſt been publiſhed, together with a Critical Eſſay on the Poem by Mrs. Barbauld. From this eſſay we ſhall have the pleaſure of giving ſome extracts, which will ſufficiently evince the peculiar excellence of this edition, excluſive of a fine type, and ſome beautiful plates.

Our fair critic introduces her obſervations by a general account of didatic or preceptive poetry, and then enters into the ſubject of the poem.

'The ground-work of The Pleaſures of Imagination,' ſhe proceeds, 'is to be found in Addiſon's eſſays on the ſame ſubject, publiſhed in the Spectator. Except in the book which treats on ridicule, and even of that the hint is there given, our author follows nearly the ſame track; and he is indebted to them not only for the leading thoughts and grand diviſion of his ſubject, but for much of the colouring alſo; for the papers of Addiſon are wrought up with ſo much elegance of language, and adorned with ſo many beautiful illuſtrations, that they are equal to the moſt finiſhed poem. Perhaps the obligations of the poet to the eſſay-writer are not ſufficiently adverted to, the latter being only ſlightly mentioned in the preface to the poem. It is not meant however to inſinuate that Akenſide had not various other ſources of his ideas. He ſat down to this work, which was publiſhed at the early age of three-and-twenty, warm from the ſchools of ancient philoſophy, whoſe ſpirit he had deeply imbibed, and full of enthuſiaſm for the treaſures of Greek and Roman literature. The works of no author have a more claſſic air than thoſe of our poet. His hymn to the Naiads ſhews the moſt intimate acquaintance with their mythology. Their laws, their arts, their liberty, were equally the objects of his warm admiration, and are frequently referred to in various parts of his poems. He was fond of the platonic philoſophy, and mingled with the ſplendid viſions of the academic ſchool, ideas of the fair and beautiful in morals and in taſte, gathered from the writings of Shafteſbury, Hutchinſon, and others of that ſtamp, who then very much engaged the notice of the public. Educated in the univerſity of Edinburgh, he joined to his claſſic literature, the keen diſcriminating ſpirit of metaphyſic enquiry, and the taſte for moral beauty which has ſo much diſtinguiſhed our northern ſeminaries, and which the celebrity of their profeſſors, and the genius of the

place has never failed of communicating to their diſciples. Thus prepared, by nature with genius, and by education with the previous ſtudies and habits of thinking, he was peculiarly fitted for writing a philoſophical poem.

'The firſt lines contain the definition of his ſubject, which he has judiciouſly varied from his maſter Addiſon, who expreſly confines the pleaſures of imagination to "ſuch as ariſe from viſible objects only;" and divides them into "the primary pleaſures of the imagination, which entirely proceed from ſuch objects as are before our eyes, and thoſe ſecondary pleaſures of the imagination which flow from the ideas of viſible objects when the objects are not actually before the eye, but are called up into our memories, or formed into agreeable viſions of things that are either abſent or fictitious." This definition ſeems to exclude a blind man from any ſhare whatever of thoſe pleaſures, and yet who would deny that the elegant mind of Blacklock was capable of receiving and even of imparting them in no ſmall degree. Our author therefore includes every ſource by which, through any of our ſenſes or perceptions, we receive notices of the world around us; as well as the reflex pleaſures derived from the imitative arts.

With what attractive charms this goodly frame
Of nature touches the conſenting hearts
Of mortal men, and what the pleaſing ſtores
Which beauteous imitation thence derives,
To deck the Poet's or the Painter's toil,
My verſe unfolds.

'After this clear and conciſe definition, and a lively and appropriate invocation to the powers of fancy guided by truth and liberty, the author begins by unfolding the platonic idea that the univerſe with all its forms of material beauty was called into being from its prototype, exiſting from all eternity in the divine mind. The different propenſities that human beings are born with to various purſuits, are enumerated in ſome very beautiful lines, and *thoſe* are declared to be the moſt noble which lead a choſen few to the love and contemplation of the ſupreme beauty by the love and contemplation of his works. The poet thus immediately, and at the very outſet, dignifies his theme, by connecting it with the ſublimeſt feelings the human mind is capable of entertaining, feelings without which the various ſcenes of this beautiful univerſe degenerate into gaudy ſhows, fit to catch the eye of children, but unintereſting to the heart and affections; and thoſe laws and properties about which philoſophy buſies herſelf, into a bewildering maſs of unconnected experiments and independent facts. Theſe lines afford more than one example of climax, graceful repetition, and richneſs of poetic language. The ſubject is then branched out into the three grand diviſions marked by Addiſon, the *ſublime*, the *wonderful*, and the *beautiful*. Each is exemplified with equal judgment and taſte, but the ſublime is perhaps expreſſed with moſt energy, as it certainly was moſt congenial to the mind of our author. The paſſage of which the thought is borrowed from Longinus, *ſay why was man ſo eminently raiſed*, is almoſt unequalled in grandeur of thought and loftineſs of expreſſion, yet it has not the appearance, as ſome other parts of the poem have, of being laboured into excellence, but rather of being thrown off at once amid the ſwell and fervency of a kindled imagination. The final cauſe of each of theſe propenſities is happily inſinuated: of the ſenſe of the ſublime, to lead us to the contemplation of the Supreme Being; of that of novelty to awaken us to conſtant activity; of beauty to mark out to us the objects moſt perfect in their kind. Thus does he make philoſophy and poetry to go hand in hand. The exemplification of the love of novelty in the audience of *the village matron* who tells of *witching rhymes and evil ſpirits*, is highly wrought. The author however had doubtleſs in his

mind not only the eſſays of Addiſon, which were immediately under his eye, but that paſſage in another paper where he repreſents the circle at his landlady's cloſing their ranks, and crowding round the fire at the concluſion of every ſtory of ghoſts. *Around the beldam all erect they hang. Congealed with ſhivering ſighs*, very happily expreſſes the effects of that kind of terror, which makes a man ſhrink into himſelf, and feel afraid, as it were, to draw a full inſpiration. It may be doubted however whether the attraction which is felt toward theſe kind of ſenſations when they riſe to terror, can be fairly referred to the love of novelty. It ſeems rather to depend on that charm, afterward touched upon, which is attached to every thing that ſtrongly ſtirs and agitates the mind. In his deſcription of beauty, which is adorned with all the graces of the chaſter Venus, the author takes occaſion to aim a palpable ſtroke at the Night Thoughts of Dr. Young, which are here characteriſed by "the ghoſtly gloom of graves and hoary vaults and cloiſtered cells, by walking with ſpectres through the midnight ſhade, and attuning the dreadful workings of his heart to the accurſed ſong of the ſcreaming owl." The ſame alluſion is repeated in one of his odes,

Nor where the boding raven chaunts,
Nor near the owl's unhallow'd haunts
Will ſhe (the Muſe) her cares employ;
She flies from ruins and from tombs,
From Superſtition's horrid glooms,
To day-light and to joy.

'This antipathy is not ſurpriſing: for never were two poets more contraſted. Our author had more of taſte and judgment. Young more of originality. Akenſide maintains throughout an uniform dignity. Young has been characteriſtically deſcribed in a late poem as one in whom

Still gleams and ſtill expires the cloudy day
Of genuine Poetry.

'The genius of one was clouded over with the deepeſt glooms of Calviniſm, to which ſyſtem however he owed ſome of his moſt ſtriking beauties. The religion of the other, all at leaſt that appears of it, and all indeed that could with propriety appear in ſuch a poem, is the pureſt theiſm; liberal, cheerful, and ſublime; or, if admitting any mixture, he ſeems inclined to tincture it with the myſticiſm of Plato, and the gay fables of ancient mythology. The one declaims againſt infidels, the other againſt monks, the one reſembles the Gothic, the other the Grecian architecture, the one has been read with deep intereſt by many who, when they have abandoned the tenets of orthodoxy can ſcarcely bear to re-peruſe him, the other, dealing more in general truths, will always be read with pleaſure, though he will never make ſo deep an impreſſion.

'The poem goes on to trace the connection of beauty with truth, by ſhewing that all the beauty we admire in vegetable or animal life reſults from the fitneſs of the object to the uſe for which it is intended, and ſerves as a kind of ſtamp ſet by the Creator to point out the health, ſoundneſs, and perfection of the form in which it reſides. This leads him on to ſpeak of moral beauty, and tracing the regular gradations of beauty through colour, ſhape, ſymmetry, and grace to its higheſt character in the expreſſion of moral feelings, he breaks out into an animated apoſtrophe,

Mind, mind alone—the living fountain in itſelf contains
Of beauteous or ſublime.

'The poem continues in a high ſtrain of noble enthuſiaſm to the end of the book, and concludes with an invocation to the genius of ancient Greece, with whoſe philoſophy and high ſenſe of liberty he was equally enamoured. It is eaſy for the reader who is converſant in the writings of Shaftesbury and Hutchinſon to perceive how much their elegant and faſcinating ſyſtem is adapted to ennoble our author's ſubject, and how much

the Pleaſures of Imagination are raiſed in value and importance by building the throne of virtue ſo near the bower of beauty. This book is compleate in itſelf; and if we may be allowed to hazard a conjecture, contains nearly the whole of what the author on the firſt view might think neceſſary to his ſubject.'

Mrs. Barbauld proceeds to examine, in the ſame manner, the ſecond and third books of this philoſophical poem, in order to ſhow, more particularly, the poetical uſe which the author had made of his ſubject. She then concludes with the following general obſervations on his poetical character:

'If the genius of Akenſide be to be eſtimated from this poem, and it is certainly the moſt capital of his works, it will be found to be lofty and elegant, chaſte, claſſical, and correct: not marked with ſtrong traits of originality, not ardent nor exuberant. His enthuſiaſm was rather of that kind which is kindled by reading and imbibing the ſpirit of authors, than by contemplating at firſt hand the works of nature. As a verſifyer Akenſide is allowed to ſtand among thoſe who have given the moſt finiſhed models of blank verſe. His periods are long but harmonious, the cadences fall with grace, and the meaſure is ſupported with uniform dignity. His muſe poſſeſſes the *mien erect, and high commanding gait*. We ſhall ſcarcely find a low or trivial expreſſion introduced, a careleſs or unfiniſhed line permitted to ſtand. His ſtatelineſs however is ſomewhat allied to ſtiffneſs. His verſe is ſometimes feeble through too rich a redundancy of ornament, and ſometimes laboured into a degree of obſcurity from too anxious a deſire of avoiding natural and ſimple expreſſions. We do not conceive of him as *touring eaſy his unpremeditated ſtrain*. It is rather difficult to read from the ſenſe being extended ſometimes through more than twenty lines; but when well read fills and gratifies the ear with all the pomp of harmony. It is far ſuperior to the compoſitions of his contemporary Thomſon (we ſpeak now only of the meaſure) and more equal than Milton though inferior to his fineſt paſſages. It is indeed too equal not to be in ſome degree monotonous. He is fond of compound epithets, led to it perhaps by his fondneſs for the Greek, and delights in giving a claſſic air to his compoſitions by uſing names and epithets the moſt remote from vulgar uſe. Like Homer's gods his poetry ſpeaks a different language from that of common mortals.

* * * * *

'On the whole, though we may not look upon Akenſide as one of thoſe few born to *create* an era in poetry, we may well conſider him as formed to ſhine in the brighteſt; we may venture to predict that his work, which is not formed on any local or temporary ſubject, will continue to be a claſſic in our language; and we ſhall pay him the grateful regard which we owe to genius exerted in the cauſe of liberty and philoſophy, of virtue and of taſte.'

ON CRUELTY TO ANIMALS.

To the Editor of The Univerſal Magazine.

Sir,

IN your Magazine for November laſt, I read with much pleaſure a letter ſigned Clemens, 'On a prevalent ſpecies of cruelty,' cruelty to animals. I cannot help being of opinion, that the cruelties we exerciſe upon thoſe helpleſs objects ariſes from a principle, which pride forbids us to acknowledge, I mean, a principle of oppreſſion and tyranny which lurks in our minds, and is reſtrained from action only when our fellow-creatures are made the ſubjects of it. Much as we talk, for it is the cant of the day, of enthroned tyrants, we ſeldom ſee tyranny ſo unfeelingly exerciſed

as in the conduct of thoſe petty tyrants, which may be found in every town, village, and ſtreet. Power is the moſt dangerous of all things, and very wiſely, therefore, reſtrained by the laws, and placed in as few hands as poſſible. Tied down, nevertheleſs, from exerciſing it upon one another, we find ſome gratification of the paſſion, in exerciſing it upon domeſtic animals, or upon thoſe objects which are ſubjected to us.

——— 'O! but man, proud man,
(Dreſt in a little brief authority;
Moſt ignorant of what he's moſt aſſured,
His glaſſy eſſence) like an angry ape,
Plays ſuch fantaſtic tricks before high heaven
As make the angels weep.'

An old, but very ſenſible writer on this ſubject, ſays, that he knows not upon what principle of juſtice it is, that mankind have founded their right on the lives of every creature that is placed in a ſubordinate rank of being to themſelves. Whatever claim they may have in right of food and ſelf-defence, did they extend their privilege no farther than thoſe articles would reaſonably carry them, numberleſs beings might enjoy their lives in peace, who are now hurried out of them by the moſt wanton and unneceſſary cruelties. I cannot indeed diſcover why it ſhould be thought leſs inhumane to cruſh to death a harmleſs inſect, whoſe ſingle offence is that he eats that food which nature has prepared for his ſuſtenance; than it would be were I to kill any more bulky creature for the ſame reaſon. There are few tempers ſo hardened to the impreſſions of humanity, as not to ſhudder at the thought of the latter; and yet the former is univerſally practiſed without the leaſt check of compaſſion. This ſeems to ariſe from the groſs error of ſuppoſing, that every creature is really in itſelf contemptible, which happens to be clothed with a body infinitely diſproportionate to our own; not conſidering that great and little are merely relative terms.

The well-known expreſſion of Shakſpeare, quoted by your correſpondent Clemens, is not thrown out in the latitude of poetical imagination, but ſupported by the diſcoveries of the moſt improved philoſophy: for there is every reaſon to believe that the ſenſations of many inſects, are as exquiſite as thoſe of creatures of far more enlarged dimenſions; perhaps even more ſo. The millipedes, for inſtance, rolls itſelf round, upon the ſlighteſt touch; and the ſnail gathers in her horns upon the leaſt approach of your hand. Are not theſe the ſtrongeſt indications of *their* ſenſibility? And is it any evidence of *ours*, that we are not therefore induced to treat them with a more ſympathizing tenderneſs?

Montaigne obſerves, that there is a certain general claim of kindneſs and benevolence, which every ſpecies of creatures has a right to from us. It is to be regretted that this generous maxim is not more attended to, in the affair of education, and preſſed home upon tender minds in its full extent and latitude. I am far indeed from thinking, that the early delight which children diſcover in tormenting flies, &c. is a mark of any *innate* cruelty of temper; becauſe this turn may be accounted for upon other principles, and it is entertaining unworthy notions of the Deity, to ſuppoſe he forms mankind with a propenſity to the moſt deteſtable of all diſpoſitions. But moſt certainly, by being unreſtrained in ſports of this kind, they may acquire by habit, what they would never have learned from nature, and grow up into a confirmed inattention to every kind of ſuffering but their own. Accordingly, the ſupreme court of judicature at Athens, thought an inſtance of this ſort not below its cognizance, and puniſhed a boy for putting out the eyes of a poor bird, that had unhappily fallen into his hands.

It might be of ſervice, therefore, it ſhould ſeem, in order to awaken as early as poſſible in children an extenſive ſenſe of humanity, to give

them a view of ſeveral ſorts of inſects, as they may be magnified by the aſſiſtance of glaſſes, and to ſhew them that the ſame evident marks of wiſdom and goodneſs prevail in the formation of the minuteſt inſect, as in that of the moſt enormous Leviathan: that they are furniſhed equally with whatever is neceſſary, not only to the preſervation, but the happineſs of their beings in that claſs of exiſtence to which Providence has aſſigned them: in a word, that the whole conſtruction of their reſpective organs diſtinctly proclaims them the objects of the divine benevolence, and therefore that they juſtly ought to be ſo of ours. I am, &c.

ALTER CLEMENS.

An Account of ſome extraordinary NATURAL *and* ARTIFICIAL CURIOSITIES *in* Poland; *particularly of the wonderful Salt Mines in the Neighbourhood of* Cracow.

[From The Hiſtory of Poland, from its Origin as a Nation, to the Commencement of the Year 1795.]

AMONG the natural curioſities of Poland, muſt be reckoned the wild men that have been found in the woods of that country. The frequent incurſions of the Tartars and other barbarous nations, who often bore off whole villages of people into ſlavery, probably forced the women to carry their children into the woods for ſafety, and, in caſe of farther purſuit, to leave them behind; for they are frequently found among bears and other wild beaſts, by whom they are nouriſhed, and taught to feed like them. Such beings have been frequently found in the woods both of Poland and Germany, diveſted of almoſt all the properties of humanity, except the form. Thoſe that have been taken went generally upon all-fours, though ſometimes they ſtood upright. They had not the uſe of ſpeech at firſt, but were taught to ſpeak when brought into towns, and uſed kindly; retaining no memory of their former ſavage lives when they came to be humanized, and made converſable by cultivation.

The ſalt mines of the country are ſtriking objects of natural curioſity. Theſe are wonderful caverns, ſeveral hundred yards deep, at the bottom of which are many intricate windings and labyrinths. Out of theſe are dug four different kinds of ſalts; one extremely hard, like cryſtal; another, ſofter, but clearer; a third, white, but brittle; theſe are all brackiſh; but the fourth is ſomewhat freſher. Theſe four kinds are dug in different mines near the city of Cracow; on one ſide of them is a ſtream of ſalt water; and on the other, one of freſh. The revenue ariſing from theſe and other ſalt-mines is very conſiderable, and formed part of the royal revenue, till they were ſeized by the emperor, being ſituated within the provinces which he diſmembered from Poland; the annual average profit of that of Wielitſka was 3,500,000 Poliſh florins, or 97,222l. 4s. 6d. ſterling. The latter, indeed, is the moſt conſiderable ſalt-mine in the world, and from it a great part of the continent is ſupplied with that article. Wielitſka is a ſmall town about eight miles from Cracow: the mine is excavated in a ridge of hills at the northern extremity of the chain which joins to the Carpathian mountains, and has been wrought above 600 years, for they are mentioned in the Poliſh annals ſo early as 1237 under Boleſlaus the Chaſte, and not then as a new diſcovery: how much earlier they were known cannot be aſcertained.

There are eight openings or deſcents into this mine, ſix in the field, and two in the town itſelf, which are

moſtly uſed for letting down the workmen, and taking up the ſalt; the others being chiefly uſed for letting in wood and other neceſſaries.

The openings are five feet ſquare, and about four wide; they are lined throughout with timber, and at the top of each there is a large wheel with a rope as thick as a cable, by which things are let down and drawn up; and this is worked by a horſe. When a ſtranger has the curioſity to ſee the works, he muſt deſcend by one of theſe holes; he is firſt to put on a miner's coat over his clothes, and then being led to the mouth of the hole by a miner, who ſerves for a guide, the miner faſtens a ſmaller rope to the large one, and ties it about himſelf; he ſits in this, and, taking the ſtranger in his lap, gives the ſign to be let down. When ſeveral go down together, the cuſtom is, that when the firſt is let down about three yards the wheel ſtops, and another miner takes another rope, ties himſelf, takes another in his lap, and deſcends about three yards farther; the wheel then ſtops for another pair, and ſo on till the whole company are ſeated, then the wheel is again worked, and the whole ſtring of adventurers are let down together. It is no uncommon thing for forty people to go down in this manner. When the wheel is finally ſet a-going, it never ſtops till they are all down; but the deſcent is very ſlow and gradual, and it is a very uncomfortable time, while they all recollect that their lives depend on the goodneſs of the rope. They are carried down a narrow and dark well to the depth of ſix hundred feet perpendicular; this is in reality an immenſe depth, but the terror and tedioufneſs of the deſcent makes it appear to moſt people vaſtly more than it is. As ſoon as the firſt miner touches the ground at the bottom, he ſlips out of the rope and ſets his companion upon his legs, and the rope continues deſcending till all the reſt do the ſame.

The place where they are ſet down is perfectly dark, but the miners ſtrike fire and light a ſmall lamp, by means of which (each taking the ſtranger he has care of by the arm) they lead them through a number of ſtrange paſſages and meanders, all deſcending lower and lower, till they come to certain ladders by which they deſcend an immenſe depth, and this through paſſages perfectly dark. The damp, cold, and darkneſs of theſe places, and the horror of being ſo many yards under ground, generally make ſtrangers heartily repent before they get thus far; but when at bottom they are well rewarded for their pains, by a ſight that could never have been expected after ſo much horror.

At the bottom of the laſt ladder the ſtranger is received in a ſmall dark cavern, walled up perfectly cloſe on all ſides. To increaſe the terror of the ſcene, it is uſual for the guide to pretend the utmoſt terror on the apprehenſion of his lamp going out, declaring they muſt periſh in the mazes of the mine if it did. When arrived in this dreary chamber, he puts out his light, as if by accident, and after much cant catches the ſtranger by the hand and drags him through a narrow creek into the body of the mine, when there burſts at once upon his view a world, the luſtre of which is ſcarcely to be imagined. It is a ſpacious plain, containing a whole people, a kind of ſubterraneous republic, with houſes, carriages, roads, &c. This is wholly ſcooped out of one vaſt bed of ſalt, which is all a hard rock, as bright and glittering as cryſtal, and the whole ſpace before him is formed of lofty arched vaults, ſupported by columns of ſalt, and roofed and floored with the ſame, ſo that the columns, and indeed the whole fabric, ſeem compoſed of the pureſt cryſtal.

They have many public lights in this place continually burning for the general uſe, and the blaze of thoſe reflected from every part of the mine, gives a more glittering proſpect than any thing above ground can poſſibly exhibit. Were this the whole beauty of the ſpot, it were ſufficient to re-

traſt our wonder; but this is only a ſmall part. The ſalt (though generally clear and bright as cryſtal) is in ſome places tinged with all the colours of precious ſtones, as blue, yellow, purple, and green; there are numerous columns wholly compoſed of theſe kinds, and they look like maſſes of rubies, emeralds, amethyſts, and ſapphires, darting a radiance which the eye can hardly bear, and which has given many people occaſion to compare it to the ſuppoſed magnificence of heaven.

Beſide the variety of forms in theſe vaults, tables, arches, and columns, which are framed as they dig out the ſalt for the purpoſe of keeping up the roof, there is a vaſt variety of others, groteſque and finely figured, the work of nature, and theſe are generally of the pureſt and brighteſt ſalt.

The roofs of the arches are in many places full of ſalt, hanging pendent from the top in the form of icicles, and having all the hues and colours of the raiobow; the walks are covered with various congelations of the ſame kind, and the very floors, when not too much trodden and battered, are covered with globules of the ſame ſort of beautiful materials.

In various parts of this ſpacious plain ſtand the huts of the miners and families, ſome ſtanding ſingle, and others in cluſters like villages. They have very little communication with the world above ground, and many hundreds of people are born and live all their lives here.

Through the midſt of this plain lies the great road to the mouth of the mine. This road is always filled with carriages loaded with maſſes of ſalt out of the farther part of the mine, and carrying them to the place where the rope belonging to the wheel receives them; the drivers of theſe carriages are all merry and ſinging, and the ſalt looks like a load of gems. The horſes kept here are a very great number, and when once let down, they never ſee the day-light again; but ſome of the men take frequent occaſions of going up and breathing the freſh air. The inſtruments principally uſed by the miners are pick axes, hammers, and chiſſels; with theſe they dig out the ſalt in form of huge cylinders, each of many hundred weight. This is found the moſt convenient method of getting them out of the mine, and as ſoon as got above ground, they are broken into ſmaller pieces, and ſent to the mills, where they are ground to powder. The fineſt ſort of the ſalt is frequently cut into toys, and often paſſes for real cryſtal. This hard kind makes a great part of the floor of the mine; and what is moſt ſurpriſing in the whole place is, that there runs conſtantly over this, and through a large part of the mine, a ſpring of freſh water, ſufficient to ſupply the inhabitants and their horſes, ſo that they need not have any from above ground. The horſes uſually grow blind after they have been ſome little time in the mine, but they do as well for ſervice afterward as before.

After admiring the wonders of this amaſing place, it is no very comfortable remembrance to the ſtranger, that he is to go back again through the ſame diſmal way he came, and indeed the journey is not much better than the proſpect; the only means of getting up is by the rope, and little more ceremony is uſed in the journey than in the drawing up of a piece of ſalt.

The ſalt dug from this mine is called Ziebna, or green ſalt, but for what reaſon it is difficult to determine, its colour being an iron grey; when pounded, it has a dirty aſh colour, like what we call brown ſalt. The mine appears to be inexhauſtible, as will eaſily be conceived from the following account of its dimenſions, given by Mr. Coxe: its known breadth (ſays he) is 1115 feet, its length 6691 feet, and depth 743; this, however, is to be underſtood only of the part which has been actually worked; as to the real depth, or longitudinal extent to the mine, it is not poſſible to conjecture.

Under the mountains adjoining to Kiow, on the frontiers of Ruſſia, and

in the deſerts of Podolia, are ſeveral catacombs, or ſubterranean vaults, which the ancients uſed for burying places, and where a great number of human bodies are ſtill preſerved entire, though interred many ages ſince, having been better embalmed, and become neither ſo hard nor ſo black as the Egyptian mummies. Among them are two princes in the habits they uſed to wear. It is thought that this preſerving quality is owing to the nature of the ſoil, which is dry and ſandy.

Of antiquities Poland can boaſt of but few, as ancient Sarmatia was never perfectly known to the Romans themſelves.

Its artificial curioſities alſo are not numerous, conſiſting chiefly of the gold, ſilver, and enamelled veſſels preſented by the kings and prelates of Poland, and preſerved in the cathedral of Gneſna.

ON PROPHETICAL IMPOSITIONS.

To the Editor of the Univerſal Magazine.

Sir,

I THINK it has been remarked in an eſſay in one of your late Magazines, that there are many circumſtances, which occur to check our pride in eſtimating the wiſdom of the preſent age, and calling it an *enlightened* one, and conſequently deſpiſing the wiſdom of our forefathers. The improvements of the preſent age in juſt thinking are, no doubt, great in the aggregate; but we do not find that they ſpread over a very extenſive ſurface. There is ſcarcely any folly, or ſuperſtition of former times which may not be revived by artful men to great advantage, and find abundance of advocates even among thoſe who in other reſpects are not thought unwiſe, becauſe in them they give free ſcope to their reaſoning powers. At this time, at the cloſe of this very enlightened century, many artful men have ſtept forward, and with too much ſucceſs, to delude the public into a belief of pretended prophecies, and diſtract their minds ſo as to make them ſluggiſh and remiſs in the performance of the duties, or ſuperſtitiouſly fearful of a ſomething, which they dread the more as they underſtand it the leſs. A variety of pamphlets have been publiſhed, to prove that the leading events accompanying the French revolution were predicted one, one and a half, and two centuries ago, and ſome have repaired to the books of Daniel and St John, to carry on this farce of prophecy yet farther, and to predict the final concluſion of the tranſactions now carrying on in Europe.

Were theſe impoſtures confined only to the vulgar and the illiterate, it might be left to the arm of civil power to puniſh ſuch diſturbers of public peace; but when we ſee perſons profeſſing religious principles, and poſſeſſing ſome ſhare of good ſenſe, giving way to theſe deluſions, it becomes neceſſary to recall to their remembrance certain facts and principles, which may ſhow *them* the impiety of joining in ſuch conſpiracies, as well as its abſurdity. With your permiſſion, therefore, I would briefly ſtate the following particulars, taking it for granted that I am addreſſing myſelf to thoſe only who believe in revealed religion.

The only uſe for which prophecies were given was to confirm the truth of revelation, and they form one of the ſtrongeſt evidences in its favour. Many of theſe prophecies have been literally fulfilled in the hiſtory of the Jews, of the manner and progreſs of the propagation of the Chriſtian religion, and the events therewith connected. Many of them have not yet been fulfilled; at leaſt we have not been able to diſcover the relationſhip between them and any events which have taken place. Others, perhaps, may be now fulfilling, although, from our narrow and limited comprehenſion of the ways of Providence, we are

not able to say which of them, nor in what circumstances the events may conclude.

Secondly, It ought to be observed, that the spirit of prophecy, which came immediately from heaven, ceased when the propagation of Christianity took place. There has been no instance since, of any human being gifted with the knowledge of future events. The impertinent curiosity of mankind has, indeed, given rise to a multitude of impostors, but they have been generally easily detected, and have never imposed on any but the weak and ignorant. The intention of the prophecies being merely to confirm the truth of revelation, that mode of declaring the will of the Almighty became no longer necessary. And if this were not true in point of fact, it would certainly be so in point of reason, because a knowledge of future events would overturn the whole system of life and action. Those events, therefore, it is reasonable to believe, will ever be concealed from our knowledge; we could not else have the exercise of our judgment or our will, but would be mere machines, a supposition contrary to all that we know and have read of the intention of the Almighty in the formation of man.

Thirdly, It appears from experience, and the history of mankind, that the meaning of none of the prophecies was ever found, or intended to be found out, before the fulfillment had taken place. There is no book nor record by which we can discover that any person ever had discernment enough to discover the true meaning of a prophecy, before its full accomplishment. This, at first sight, appears to be extraordinary, and perhaps absurd; but let us not judge too rashly. It is perfectly consistent with the intention of the Almighty in giving such intimations of future events, which was, as already observed, not to disturb the progress of human action, but to remain as a test or proof of the truth of the Christian revelation. The moment we know *certainly* what shall befall us as a nation, or as individuals, from that moment all action upon our part would cease; and whether the event were good or bad, we could neither promote nor avert it—a case too absurd to be seriously put, and which yet must be admitted by every person who is weak enough to give credit to the prophecies of modern impostors.

When these three circumstances, therefore, are taken into the consideration, namely, the intention of prophecy, the time at which the spirit of prophecy ceased, and the impossibility of discovering the meaning of a prophecy before its accomplishment, it will be evident that the credulity in modern impostures is impious as well as weak, and absurd as well as impious. I shall conclude this short letter by a passage from bishop Newton, whose work on the prophecies cannot be too much recommended:

'Obscurities,' says he, 'there are indeed in the prophetic writings, for which many good reasons may be assigned, and this particularly, because prophecies are the only species of writing, which is designed more for the instruction of future ages, than of the times wherein they are written. If the prophecies had been delivered in plainer terms, some persons might be for hastening their accomplishment, as others might attempt to defeat it; men's actings would not appear so free, nor God's Providence so conspicuous in their completion. But though some parts are obscure enough to exercise the church, yet others are sufficiently clear to illuminate it; and the obscure parts, the more they are fulfilled, the better they are understood. In this respect, as the world groweth older, it groweth wiser. Time, that detracts something from the evidence of other writers, is still adding something to the credit and authority of the prophets. Future ages will comprehend more than the the past: and the perfect accomplishment will produce a perfect knowledge of all the prophecies.'

I am, sir, &c.

C. H.

METEOROLOGICAL JOURNAL, February 1795.

[See the Explanation, Vol. 92, Page 111.]

	H.	Baro.	T. out.	T. in.	Hyg.	C	Wind.	Weather, &c.
1	8	29,58	34,5	38	89	f	SSW 1	. much gentle rain
	2	29,26	37,5	39,5	84,5	5	SE 1	gentle rain. fine eve
2	8	29,26	34	39	67,5	5	W 1	: little small snow
	2	29,20	35,5	40	68	5	W 1	little snow. fine eve : snow
3	8	29,16	32	37	70	5	S 1	little snow : less cloudy
	2	30,08	36	40	69	4	W 2	little snow. fine eve : wind and sleet
4	8	30,06	29	39,5	63	5	W 2	sleet. snow. fine
	2	30,22	36	40	53,5	1	WSW 2	hazy. snowy eve. fine
5	8	30,54	32	38	66,5	3	WSW 1	hazy
	2	30,68	37	40,5	65	2	W 1	hazy. foggy eve. fine
5	8	29,92	29	36,5	66	f	W 0	. dark fog. wind N and less fog
	2	29,90	35,5	40	67,5	f	ENE 1	thick upward
7	8	29,53	33	38	70	h	E 1	
	2	29,43	37	38,5	69	h	E 1	
8	8	29,26	38,5	41,5	85	h	SE 1	
	2	29,23	44,5	42,5	79	5	SSW 1	. rainy eve and night
9	8	29,19	45,5	44,5	89	6	SW 1	. chiefly gentle rain
	2	29,17	50	47,5	87	5	SW 2	. rainy eve. wind and rain
10	8	29,16	50,5	50	82	5	SW 4	chiefly gentle rain
	2	28,99	52	51,5	77	5	SW 4	rain. chiefly fair eve and night
11	8	29,12	49	50	77,5	5	SW 3	. little wet : fine
	2	29,07	51,5	51	72	3	S 2	. cloudy and rain at times
12	8	29,09	46	50	73	5	SW 2	
	2	29,25	46	51	69	5	WSW 2	. gentle rain at night : much snow
13	8	29,21	34	44	77	5	NE 2	little snow. less cloudy and snow at times
	2	29,37	37	44,5	71,5	4	NE 1	. little snow at times. fine night
14	8	29,90	31,5	42	67	2	NNW 1	. little snow. fine but hazy
	2	30,05	37	44	66	2	N 1	hazy. cloudless eve but foggy
15	8	30,41	30	40	68	0	N 1	foggy : thin clouds and foggy
	2	30,43	36,5	42,5	68	2	NW 1	foggy. clear night
16	8	30,60	35,5	42,5	76	h	N 1	
	2	30,62	37,5	42	77	h	ENE 1	
17	8	30,53	31	40	81	f	NE 1	
	2	30,48	34	40	79	h	ENE 1	. drizzling eve. clear night
18	8	30,39	30	40	63	3	ENE 2	hazy. little snow at times
	2	30,29	32,5	40	62	3	ENE 3	. cloudy eve and more wind
19	8	30,04	28,5	37	62	3	ENE 3	. cloudy : gentle snow
20	2	29,97	30	36	64	5	NE 3	small snow. chiefly fair night
	8	29,87	27	34	64	4	NE 3	. much snow
	2	29,75	27,5	33	72	5	ENE 3	much snow. fair eve. clear
21	8	29,70	27	32,5	67	2	SE 1	foggy. little snow at times
	2	29,70	31	35,5	67	2	SE 2	. cloudy eve
22	8	29,54	32	36	70	h	E 1	
	2	29,44	37	38,5	68	5	SE 1	. little rain at times
23	8	29,49	40	40,5	79,5	4	S 1	hazy and little wet. fine. cloudy
	2	29,57	46,5	45,5	75	5	S 1	little wet at times
24	8	29,54	40	43,5	73	h	SSW 2	
	2	29,56	43	46	72	h	W 1	
	8	29,43	41	45	78,5	f	W 1	. fine
	2	29,37	46	47,5	69	3	S 1	. hazy. little wet at times
	8	29,15	40,5	46	81	f	S 0	. thick upward
	2	29,00	44,5	47	76	5	E 1	hazy. drizzling eve. rain : fair
	8	29,06	39,5	45,5	73	h	N 1	
	2	29,17	41	46,5	68	h	NNW 1	. little snow. fine eve. cloudy : sleet
	8	29,39	34	43,5	75	h	E 1	much sleet and snow
	2	29,22	35,5	42,5	80	h	E 1	snow. chiefly fair. clear frosty night

Remarks *on the State of the* Air, Vegetation, &c. February 1795

*** Thoſe on Vegetation from a Village near London.

1. The barometer 29,01 at ten at night.—6. Aconite and ſnowdrop in flower, but do not open.—8. Brocoli and cabbage rotted in a great degree, by the ſecond froſt, and many evergreen ſhrubs hurt, particularly laurustine.—26. The barometer 28,94 at ten at night.—28. This month having been in general frolty, no progreſs was made in vegetation, but rather much deſtruction: however, it muſt be remarked, that a row of peas ſixty yards in length, which were ſown in November, and ſcreened by a fruit-wall from NE winds, have not only ſurvived the inclemency of the ſeaſon, but are in a moſt healthy ſtate; while others, in different ſituations, have been deſtroyed.

Fall of Rain, 1 inch 39 hundredths.

Observations *on the* Diseases *in* February 1795.

The catarrhal affection, which commenced in the laſt month, prevailed univerſally at the beginning of this; very few eſcaped it altogether: to the ſtrong and robuſt it proved a diſeaſe of ſhort duration, ſcarcely requiring any remedy; but to the delicate, and particularly to thoſe with a tendency to pulmonic affections, its effects were very ſerious, frequently producing inflammation of the lungs, and terminating fatally. There has in fact been a greater mortality in this and the preceding month, than within the ſame ſpace of time for many years paſt; evidently from diſeaſes produced by cold applied to the ſurface of the body and lungs, which diminiſhed the ſecretions. Colic, attended by conſtipation, was very common: in general, if care was taken at its commencement to evacuate the bowels, it was ſpeedily cured; but in a few inſtances it was ſucceeded by inflammation of the bowels, and became fatal. Eryſipelas of the inflammatory kind was very prevalent: the liberal uſe of the lancet, and the antiphlogiſtic regimen, ſoon removed the diſeaſe. Smallpox ſtill continued very rare.

An Account of the Composition *of a* Water *which has the Property of deſtroying* Caterpillars, Ants, *and other* Insects; *invented by* C. Tatin, *Seedman and Floriſt, at* Paris *.

Take of black ſoap, of the beſt quality, one pound three-quarters; of flowers of ſulphur, one pound three-quarters; of muſhrooms, of any kind, two pounds; of river or rain water, fifteen gallons.

Divide the water into two equal parts; pour one part, that is to ſay, ſeven gallons and a half, into a barrel, of any convenient ſize, which ſhould be uſed only for this purpoſe; let the black ſoap be ſtirred in it till it is diſſolved, and then add to it the muſhrooms, after they have been ſlightly bruiſed.

Let the remaining half of the water be made to boil in a kettle; put the whole quantity of ſulphur into a coarſe open cloth, tie it up with a packthread in form of a parcel, and faſten to it a ſtone or other weight, of ſome pounds, in order to make it ſink to the bottom. If the kettle is too ſmall for the ſeven gallons and a half of water to be boil-

* The Bureau de Conſultation of Paris gave a reward to the author of this compoſition for his diſcovery, which they deſired might be made as public as poſſible.

ed in it at once, the ſulphur muſt alſo be divided. During twenty minutes (being the time the boiling ſhould continue) ſtir it well with a ſtick, and let the packet of ſulphur be ſqueezed, ſo as to make it yield to the water all its power and colour. The effect of the water is not rendered more powerful by increaſing the quantity of ingredients.

The water, when taken off the fire, is to be poured into the barrel, where it is to be ſtirred for a ſhort time with a ſtick; this ſtirring muſt be repeated every day until the mixture becomes fetid in the higheſt degree. Experience ſhews that the older, and the more fetid, the compoſition is, the more quick is its action. It is neceſſary to take care to ſtop the barrel well every time the mixture is ſtirred.

When we wiſh to make uſe of this water, we need only ſprinkle it, or pour it, upon the plants, or plunge their branches into it; but the beſt manner of uſing it is to inject it upon them with a common ſyringe, to which is adapted a pipe of the uſual conſtruction, except that its extremity ſhould terminate in a head of an inch and a half in diameter, pierced in the flat part with ſmall holes, like pin-holes, for tender plants; but, for trees, a head pierced with larger holes may be made uſe of.

Caterpillars, beetles, bed-bugs, *aphides*, and many other inſects, are killed by a ſingle injection of this water. Inſects which live under ground, thoſe which have a hard ſhell, hornets, waſps, ants, &c. require to be gently and continually injected, till the water has penetrated to the bottom of their abode. Ant-hills, particularly, require two, four, ſix, or eight quarts of water, according to the ſize and extent of the ant-hill, which ſhould not be diſturbed till twenty-four hours after the operation. If the ants which happen to be abſent ſhould aſſemble, and form another hill, it muſt be treated in the way before mentioned. In this manner we ſhall at laſt deſtroy them, but they muſt not be too much diſturbed with a ſtick; on the contrary, the injection ſhould be continued till, by their not appearing upon the ſurface of the earth, they are ſuppoſed to be all deſtroyed.

We may advantageouſly add to the mixture two ounces of *nux vomica*, which ſhould be boiled with the ſulphur; the water, by this means, will acquire more power, particularly if uſed for deſtroying ants.

When all the water has been made uſe of, the ſediment ſhould be thrown into a hole dug in the ground, leſt the poultry, or other domeſtic animals, ſhould eat it.

A New and Intereſting Account of PENNSYLVANIA.

[From A View of the United States of America, by Tench Coxe, Commiſſioner of the Revenue, at Philadelphia.]

THE ſtate of Pennſylvania is an oblong 156 miles wide from north to ſouth, by about 290 miles in length from eaſt to weſt. On the eaſt of it lies the Delaware river, dividing it from Weſt-Jerſey and New-York; on the north New-York, and a territory of about 200,000 acres on lake Erie, which Pennſylvania purchaſed of congreſs. On the north-weſt lies lake Erie, on which it has a conſiderable front and a good port, lying within the purchaſe from congreſs. On the weſt are the new lands called the weſtern territory, and a part of Virginia. On the ſouth lie another part of Virginia, Maryland, and the ſtate of Delaware. The contents of Pennſylvania are about 29 millions of acres, including the lake Erie territory. It lies between 39 43 and 42 of north latitude. The bay and river of Delaware are navigable from the ſea up to the great falls at Trenton,

and have a light-houſe, buoys, and piers, for the direction and ſafety of ſhips. On this river are the ſmall towns of Cheſter and Briſtol, and the city of Philadelphia, which is the capital of the ſtate, and by much the largeſt and moſt populous ſea port and manufacturing town in the United States. The diſtance of this city from the ſea, is about 60 miles acroſs the land to the New-Jerſey coaſt, and 120 miles by the ſhip-channel of the Delaware. A 70 gun ſhip may lie before the town, and at many of the wharfs, which occupy the whole eaſt front of the city for near two miles, affording every veſſel an opportunity of unlading and lading without the expence of lighterage. Rafts of maſts, timber, boards, hoops, and ſtaves, with other articles upon them, can be brought down the Delaware from the counties of Montgomery and Otſego, in New-York, 200 miles above the city, by the courſe of the river. Some money was expended by the government and landholders, in improving the navigation up toward the ſource, before the revolution; and there has been a ſurvey lately begun, for the purpoſe of proceeding in the improvement of this and other principal rivers of Pennſylvania, and for making communications by canals in the improved part, and by roads in the unimproved part of the ſtate. The Pennſylvanians are much inclined to ſuch enterpriſes, having found great benefit from them. On the completion of the preſent plan, the ſtate will be more conveniently interſected by roads than any other of its ſize in the union, which will greatly facilitate the ſettlement of its new lands. A ſlight view of the map will ſhow how advantageouſly this ſtate is watered by the Delaware and its branches, the Schuylkill, the Juniata, the Suſquehanna and its branches, the Ohio, Allegeny, Youghiogeny, and Monogahela. The Potomac and lake Erie alſo afford proſpects of conſiderable benefit from their navigations. Nature has done much for Pennſylvania in regard to inland water-carriage; which is ſtrikingly exemplified by this fact, that although Philadelphia and lake Erie are diſtant from each other above 300 miles, there is no doubt that the rivers of the ſtate may be ſo improved, as to reduce the land carriage between them nine-tenths. In the ſame way the navigation to Pittſburg, after due improvement, may be uſed inſtead of land carriage, for the whole diſtance except twenty or thirty miles. By theſe routes it is clear, that a large proportion of the foreign articles, uſed on the weſtern waters, will be tranſported; and that their furs, ſkins, ginſeng, hemp, flax, pot-aſh, and other valuable commodities, may be brought to Philadelphia. The hemp and oak timber for the Ruſſian navy is tranſported by inland navigation 1,200 miles: and yet hemp is ſhipped from that kingdom on lower terms than from any other part of the world. Ruſſia, for ſome time after the ſettlement of Pennſylvania by civilized and enlightened people, was in a ſtate of abſolute barbariſm, and deſtitute of theſe improvements. Much therefore is to be expected from the continued exertions of the prudent, induſtrious, and intelligent inhabitants of Pennſylvania, in the courſe of the preſent century *.

The produce, manufactures, and exports of Pennſylvania, are very many and various, viz. wheat, flour, midlings, ſhip-ſtuff, bran, ſhorts, ſhip-bread, white water biſcuit, rye, rye flour, Indian corn or maize, Indian meal, buckwheat, buckwheat meal, bar and pig iron, ſteel, nail rods, nails, iron hoops, rolled iron tire, gun-powder †, cannon ball, iron cannon, muſ-

* In the laſt three years more public funds and private capital have been applied to the improvement of roads and rivers, and the cutting of canals, than in all the time between the year 1790 and the firſt ſettlement of the ſtate. A. D. 1793.

† It is ſaid there are at this time near 50,000 quarter caſks of gun-powder in the Philadelphia magazine, manufactured in the ſtate of Pennſylvania. A. D. 1793.

quets, ſhips, boats, oars, hand-ſpikes, maſts, ſpars, ſhip-timber, ſhip-blocks, cordage, ſquare timber, ſcantling, plank, board, ſtaves, headings, ſhingles, wooden hoops, tanners bark, corn ſans, coopers ware, bricks, coarſe earthen or potters ware, a very little ſtone-ware, glue, parchment, ſhoes, boots, ſole leather, upper leather, dreſſed deer and ſheep ſkins, and gloves and garments thereof, fine hats, many common, and a few coarſe; thread, cotton, worſted, and yarn hoſiery; writing, wrapping, blotting, ſheathing, and hanging paper; ſtationary, playing cards, paſteboards, books; wares of braſs, pewter, lead, tinplate, copper, ſilver and gold; clocks and watches, muſical inſtruments, ſnuff, manufactured tobacco, chocolate, muſtard-ſeed and muſtard, flaxſeed, flaxſeed oil, flax, hemp, wool, wool and cotton cards, pickled beef, pork, ſhad, herrings, tongues and ſturgeons, hams and other bacon, tallow, hog's lard, butter, cheeſe, candles, ſoap, beeswax, loaf-ſugar, pot and pearl aſhes, rum and other ſpirits, beer, porter, hops, winter and ſummer barley, oats, ſpelts, onions, potatoes, turnips, cabbages, carrots, parſnips, red and white clover, timothy, and moſt European vegetables and graſſes, apples, peaches, plums, pears, apricots, grapes, both native and imported, and other European fruits, working and pleaſurable carriages, horſes, horned cattle, ſheep, hogs, wood for cabinet-makers, lime-ſtone, coal, free-ſtone, and marble.

Some of theſe productions are fine, ſome indifferent. Some of the manufactures are conſiderable, for a young country, circumſtanced as this has been; ſome inconſiderable: but they are enumerated, to ſhew the general nature of the ſtate, and the various purſuits of the inhabitants. In addition to them we may mention, that a lead-mine and two or three ſalt-ſprings have been diſcovered in our new country; which, no doubt, will be worked, as ſoon as the demand for lead and ſalt to the weſtward increaſes. We ought alſo to notice our great foreſt for making pot aſhes and glaſs.

The manufactures of Pennſylvania have increaſed exceedingly within a few years, as well by maſter-workmen and journeymen from abroad, as by the increaſed ſkill and induſtry of our own citizens. Houſehold or family manufactures have greatly advanced; and valuable acquiſitions have been made of implements and machinery to ſave labour, either imported or invented in the United States. The hand-machines for carding and ſpinning cotton have been introduced by foreigners, and improved; but we have obtained the water mill for ſpinning cotton, and a water mill for flax, which is applicable alſo to ſpinning hemp and wool. Theſe machines promiſe us an early increaſe of the cotton, linen, and hempen branches, and muſt be of very great ſervice in the woollen branch. Additional employment for weavers, dyers, bleachers, and other manufacturers, muſt be the conſequence. Paper-mills, gun-powder-mills, ſteel-works, rolling and ſlitting mills, printing figured goods of paper, linen, and even of cotton, coach-making, book printing, and ſeveral other branches, are wonderfully advanced: and every month ſeems to extend our old manufactures, or to introduce new ones.

The advancement of the agriculture of Pennſylvania is the beſt proof that can be given of the comfort and happineſs it affords to its farming, manufacturing, and trading citizens. In the year 1786, our exports of flour were 150,000 barrels: in 1787, they were 202,000 barrels: in 1788, they were 220,000 barrels: and in 1789, they were 369,000 barrels: which exceed any exports ever made in the times of the province, or in the times of the commonwealth *. The

* The exports of flour in the year 1792 from Philadelphia amounted to above 420,000 barrels, and in the ſpring quarter of 1793 it exceeded 200,000 barrels.

produce of flax is increaſed in a much greater degree: and that of wool is conſiderably more than it was before the revolution. A new article is added to the liſt of our productions, which is a well-taſted and wholeſome ſugar, made of the maple tree. It has been proved, by many fair and careful experiments, that it is in the power of a ſubſtantial farmer, who has a family about him, eaſily to make 1 200 weight of this ſugar every ſeaſon, without hiring any additional hands, or utenſils, but thoſe that are neceſſary for his family, and farm uſe. The time, in which it can be made, is from the middle of February to the end of March, when farmers in this country have very little to do, as it is too early to plough or dig. The price of ſugar being lower here than in Europe, this article may be reckoned at 150 dollars per annum, to every careful and ſkilful farmer, who owns land bearing the ſugar maple. Of theſe there are ſome millions of acres in Pennſylvania and the adjacent ſtates. It ſeems alſo highly probable, that this valuable tree may be tranſplanted, and thus be obtained by almoſt any farmer in the ſtate; and that men of property, who will purchaſe kettles, and hire hands for the above ſhort period, may make larger quantities.

Pennſylvania has always afforded an aſylum to the perſecuted ſects of Europe, and of the other ſtates, in former times. No church or ſociety ever was eſtabliſhed here: no tythes or tenths can be demanded: and tho' ſome regulations of the crown of Britain excluded two churches * from a ſhare in our government, in the times of the province, they are now done away, with regard to every religious ſociety whatever, except the Hebrew church. But at this time a convention of ſpecial repreſentatives of the cities of Pennſylvania, have under conſideration all the errors, which have inadvertently crept into our conſtitution and frame of government; and in the act which they have publiſhed for the examination of the people, they have rejected the half-way doctrine of toleration, and have eſtabliſhed upon firm and perfectly equal ground all denominations of religious men. By the proviſions of the new code, a Proteſtant, a Roman Catholic, and a Hebrew, may elect or be elected to any office in the ſtate, and purſue any lawful calling, occupation, or profeſſion †. The conſtitution of general government of the United States alſo guarantees this ineſtimable and ſacred right—and it is ſurely a ſacred right; for it belongs to the Deity to be worſhipped according to the free-will and conſciences of his creatures.

We lay no difficulty in the way of any perſon, who deſires to become a free and equal citizen. On the day of his landing, he may buy a farm, a houſe, merchandiſe, or raw materials; he may open a work-ſhop, a counting-houſe, an office, or any other place of buſineſs, and purſue his calling, without any hindrance from corporation rules or monopoliſing companies, or the payment of any ſum of money to the public. The right of electing and being elected indeed, which does not affect his buſineſs or his ſafety, is not granted till the expiration of two years: this prudence requires.

A privilege, almoſt peculiar to this ſtate, has been granted to foreigners by the legiſlature of Pennſylvania, that of buying and holding lands and houſes within this commonwealth, without relinquiſhing their allegiance to the country in which they were born. They can leaſe, hire, ſell, or bequeath the lands, receive the rents, and, in ſhort, have every territorial and pecuniary right, that a natural-born Pennſylvanian has; but no civil rights. As they profeſs to owe allegiance to a foreign prince or government, and reſide in a foreign country, where they, of courſe, have civil rights, they cannot claim them, or ought they to deſire them here: for if they chooſe, at any time after the

* The Roman and Hebrew. † This code has been confirmed in Pennſylvania.

purchaſe, to come out to this country, and make themſelves citizens; or if they chooſe to give their eſtates to their children or other perſons, who will do ſo; any of them may become citizens to all intents and purpoſes. This indulgence to purchaſe is granted for three years from January 1789: and all lands bought by foreigners before January 1792 may be held for ever on thoſe terms. Whether a right to make purchaſes upon thoſe terms will be allowed to foreigners, after that time, is uncertain; and will entirely depend upon the opinion of our then legiſlature, as to the ſafety or utility of it *.

Uſeful knowledge and ſcience have been favourite objects of attention here. We have a univerſity, three colleges, and four or five public academies, beſide many private academies and free ſchools, in the city and ſeveral of the county-towns of this ſtate. Conſiderable grants of monies, of rent charges, and particularly of new lands, have been made for this purpoſe by our legiſlature; and very liberal private ſubſcriptions have been added at various times. Though our government and citizens have been always attentive to the important object of uſeful and liberal knowledge, yet an increaſed regard for learning has been manifeſted ſince the revolution. Riſing from a provincial to an independent ſituation appears, and very naturally, to have expanded our ideas, and to have given an enhanced value to improvements of the human mind †.

Among the natural advantages of Pennſylvania, her almoſt innumerable mill-ſeats ought not to be omitted. They are conveniently diſtributed by Providence throughout the ſtate; and afford the means of eſtabliſhing every ſpecies of mill-work and labour-ſaving machines, to meet the produce and raw materials almoſt at the farmers doors. In the preſent ſituation of this country, wanting hands for farming, and in the preſent ſtate of manufactures, when ingenious mechaniſm is every day and every where invented, to leſſen the neceſſity for manual labour, this natural advantage muſt appear of ineſtimable importance. Hemp and flax are among the moſt profitable productions of our rich midland and new counties, the cream of which is yet to be ſkimmed. It is therefore a fact moſt pleaſing, that we have in the ſtate the full-ſized and complete movements or works of a water-mill and machinery, to ſliver, rove, and ſpin flax and hemp into threads or yarns, fit for linen of thirty cuts to the pound, or any other coarſer kind, ſheetings, towelling, ſail-cloth, ozanbrigs, twine, and the ſtrands or yarn for cordage. The ſame machinery is calculated for the roving, or preparing, and ſpinning combed wool into worſted yarn. We have alſo the movements and complete machinery of ſir Richard Arkwright's water-mill for ſpinning yarns of cotton. And though the climate of this ſtate is not fit for cultivating that raw material, yet cotton can be raiſed with profit in every ſtate in our union ſouthward of Pennſylvania, and imported from the Eaſt and Weſt-Indies.

It is certain, that this extraordinary capacity of our country for mechanical works, has either called forth, in an unuſual degree, the mechanical powers of the human mind, or that Providence has beſtowed upon the people of this and our ſiſter ſtates an uncommon portion of that talent, which its nature and ſituation require. Our Rittenhouſe and Franklin ſtand unrivalled in mechanical philoſophy: and thoſe, who know our country, are well informed, that to theſe two great names we could add a conſiderable liſt of philoſophical and practical mechanicians, in a variety of branches.

So many of the neceſſary and convenient arts and trades depend upon the plenty and cheapneſs of fuel, that it appears proper to take notice of this article. Till the revolution, our dependence was almoſt entirely upon

* This law has been continued till the year 1795, when it may be renewed.

† Much has been done ſince 1790 in regard to ſchools. A. D. 1793.

wood fuel, of which, in the moſt populous places, we have ſtill a great abundance, and in all interior ſituations immenſe quantities: but the increaſe of manufactures has occaſioned us to turn our attention to coal. Of this uſeful foſſil, Providence has given us very great quantities, in our middle and weſtern country. The vicinity of Wyoming, on the Suſquehanna, is one bed of coal, of the open-burning kind, and of the moſt intenſe heat. On the head waters of Schuylkill and Lehi are ſome conſiderable bodies. At the head of the weſtern branch of Suſquehanna is a moſt extenſive body, which ſtretches over the country ſouth-weſterly, ſo as to be found in the greateſt plenty at Pittſburg, where the Allegeny and Youghiogeny unite, and form the head of the Ohio. It has been lately diſcovered on the waters of Neſcopeck.

All our coal has hitherto been accidentally found on the ſurface of the earth, or diſcovered in the digging of common cellars or wells: ſo that when our wood-fuel ſhall become ſcarce, and the European methods of boring ſhall be ſkilfully purſued, there can be no doubt of our finding it in many other places. At preſent, the ballaſting of ſhips from coal countries abroad, and the coal mines in Virginia, which lie convenient to ſhip navigation, occaſion a good deal of coal to be brought to the Philadelphia market. From this great abundance and variety of fuel, it reſults, that Pennſylvania, and the United States in general, are well ſuited to all manufactories which are effected by fire, ſuch as furnaces, founderies, forges, glaſs-houſes, breweries, diſtilleries, ſteelworks, ſmiths ſhops, and all other manufactories in metal, ſoap-boiling, candle-making, pot-aſh works, ſugar, and other refineries, &c.

Ship-building is a buſineſs, in which the port of Philadelphia exceeds moſt parts of the world. Not only are maſts, ſpars, timber, and plank, from our own ſtate and the other ſtates on the Delaware, conſtantly for ſale in our market: but the mulberry of the Cheſapeak, and the ever-green or live oak, and red cedar of the Carolinas and Georgia, are ſo abundantly imported, that nine-tenths of our veſſels are built of them. No veſſels are better than theſe: and in proof of it, Engliſh writers of rank might be quoted, who have publiſhed for and againſt us. A live oak and cedar ſhip of 200 tons, carpenter's meaſurement, can be fitted to take in a cargo for fourteen pounds currency per ton: (A. D. 1590) and there is not a port in Europe, in which an oak ſhip can be equally well-built and fitted for 20l. per ton in our money, or 12l. ſterling. This fact may appear doubtful or extraordinary; but it is certainly true; and it is greatly in favour of our ſhip carpenters and other tradeſmen employed in fitting and building ſhips, as well as our merchants and farmers, whoſe intereſts are ſo much connected with navigation.

The diſtance of Philadelphia from the ſea has been made an objection by ſome, as well as the cloſing of our river by the ice, which happens almoſt every winter. Amſterdam, the greateſt port in Europe, is inacceſſible in the winter. But it is a fact, that, notwithſtanding theſe objections, our veſſels make as many Weſt-India voyages as thoſe of the two other principal ſea ports of the middle ſtates: and though the river is frozen from three to nine weeks almoſt every winter, yet there are occaſional openings, which give opportunities for fleets of merchantmen to go out and come in. The fine corn and proviſion country, which lies near Philadelphia, enables the merchants to load their veſſels in the winter: and the market is regularly ſupplied with flour, pork, beef, lumber, ſtaves, iron, and many other of our principal articles of exportation. Little time therefore is loſt: and we find that our trade increaſes. The drop of 1789, and other exports from the harveſt of that year to that of 1790, it is ſuppoſed will load 120,000 tons of ſhip-

ping. We have a very extenſive back country; and many large bodies of new land, which muſt ſend their produce to the Philadelphia market, are ſettling faſt. The population of Pennſylvania, by the laſt accounts taken, was 360,000 men, women, and children; but, as ſome years have ſince elapſed, it is ſuppoſed it will not fall much ſhort of 400,000, when the preſent enumeration ſhall be completed *.

No country in Europe has paid off ſo much of her public debt, ſince the late general war, as this ſtate; notwithſtanding the paſt diſorders and difficulties of the United States, ariſing from the weakneſs of our late general government, and the ſhocks of an invaſive war. She has paid off and ſunk a ſum equal to her full ſhare of the intereſt, and a conſiderable part of the principal, of her ſtate and federal debts. Yet ſhe has laid no exciſe or internal duty, but eight-pence currency upon ſpirituous liquors, which has ſince been repealed.

The inhabitants of Pennſylvania are principally deſcendents of Engliſh, Iriſh, and Germans, with ſome Scotch, Welſh, Swedes, and a few Dutch. There are alſo many of the Iriſh and Germans, who emigrated when young or in the middle time of life: and there is a number of each of thoſe two nations now in legiſlative, executive, and judicial ſtations among us. It has ever been the policy of our government, before and ſince the revolution, and the diſpoſition of our people, to receive all ſober emigrants with open arms, and to give them immediately the free exerciſe of their trades and occupations, and of their religion. †.

Such is the preſent ſituation of things in Pennſylvania, which is more or leſs the ſame in ſeveral other of the American ſtates, viz. New-York, Maine, Virginia, the Carolinas, Georgia, Vermont, and Kentucky: but though not ſo in the reſt, the principal difference is, that they are ſo fully peopled, that there are no new lands of any value unſold; and farming lands, which are improved, are of courſe dearer than with us. In thoſe ſtates, however, agriculture, commerce, manufactures, the fiſheries, and navigation, afford comfortable ſubſiſtence and ample rewards of profit to the induſtrious and well diſpoſed, amid the bleſſings of civil and religious liberty.

THE BRITISH MUSE.

PROLOGUE

To The WHEEL of FORTUNE.

Spoken by Mr. PALMER.

A Farmer late (ſo country records ſay)
From the next market homeward took his way;
When, as the bleak unſhelter'd heath he croſs'd,
Faſt bound by winter in obdurate froſt,
The driving ſnow-ſtorm ſmote him in his courſe,
High blow'd the north, and rag'd in all its force;
Slow pac'd, and full of years, th' unequal ſtrife
Long time he held, and ſtruggl'd hard for life;
Vanquiſh'd at length, benumb'd in ev'ry part,
The very life-blood curdling at his heart,
Torpid he ſtood, in frozen fetters bound,
Doz'd, reel'd, and dropt expiring to the ground.—
Haply his dog, by wond'rous inſtinct fraught
With all the reas'ning attributes of thought,
Saw his ſad ſtate, and to his dying breaſt
Cloſe couring, his devoted body preſs'd;
Then howl'd amain for help, till, paſſing near,
Some charitable ruſtic lent an ear,
Rais'd him from earth, recall'd his flitting breath,
And ſnatch'd him from the icy arms of death.

* It proved to be 434,000 by the cenſus of 1791. † Latterly there are many French.

So when the chilling blaſt of ſecret woe
Checks the ſoul's genial current in its flow,
When death-like lethargy arreſts the mind,
Till man forgets all feeling for his kind,
To his cold heart the friendly muſe can give
Warmth, and a pulſe that forces him to live;
By the ſweet magic of her ſcene beguile,
And bend his rigid muicles to a ſmile,
Shake his ſtern breaſt with ſympathetic fears,
And make his frozen eye-lids melt in tears,
Purſuing, ſtill, her life-reſtoring plan,
Till he perceives and owns himſelf a man.
Warm'd with theſe hopes, this night we make appeal
To Britiſh hearts, for they are hearts that feel.

EPILOGUE to the SAME.

Spoken by Miſs FARREN.

THERE are—What ſhall I call them? Two great pow'rs,
Who turn and overturn this world of our's—
Fortune and folly—though not quite the ſame
In property, they play each other's game;
Fortune makes poor men rich, then turns 'em o'er
To folly, who ſoon ſtrips them of their ſtore.
—Oh; 'twas a mighty neat and lucky hit,
When Pat O'Leary ſnapt a wealthy cit.
For why? his wants were big, his means were ſmall,
His wiſdom leſs—and ſo he ſpent his all:
When fortune turn'd about, and jilted Pat,
Was fool or fortune in the fault of that?
—Sir Martin Madcap held the lucky dice,
He threw, and won five thouſand in a trice:
Keep it! cried Caution—No, he threw again,
Kick'd down the five, and *cut*, with *minus* ten.
—Giles Jumble and his dame, a loving pair,
No brains had either, and of courſe no care,
Till, woe the day! when fortune in her ſpite
Made Giles high ſheriff, and then dubb'd him knight:
Up they both go; my lady leads the dance,
Sir Giles cuts capers on the wheel of chance;
Heads down, heels over, whiſtl'd and whiſk'd about,
No wonder if their ſhallow wits ran out;
Gigg'd by their neighbours, gull'd of all their caſh,
Down comes ſir Giles, and lo with thund'ring craſh.
Who ſays that Fortune's blind? She has quicker ſight
Than moſt of thoſe on whom her favours light;
For why does ſhe enrich the weak and vain,
But that her ventures may come home again?
Paſs'd through like quickſilver, they loſe nor weight
Nor value in their loco-motive ſtate;
No ſtop, no ſtay; ſo faſt her clients follow,
Ere one mouth ſhuts, another gapes to ſwallow;
While like a conjurer's-ball—preſto! begone!
The pill that ſerv'd ſir Giles, now ſerves ſir John.
Sir Euſtace had a fair and lovely wife,
Form'd to adorn and bleſs the nuptial life,
Fortune's beſt gift in her beſt giving mood,—
Sir Euſtace made that bad which Heav'n made good;
Baſely allur'd her into folly's courſe,
Then curs'd his fate, and ſued out a divorce.
Unjuſt, at Fortune's cruelty to rail,
When we make all the mis'ries we bewail.
Ah! gen'rous patrons, on whoſe breath depends
The fortune of the muſe, and us her friends,
If in your grace this night you ſhall beſtow
One ſprig of laurel for your Poet's brow,
Impart to me your flattering commands,
And ſign them with the plaudit of your hands.

ANNA's COMPLAINT;

Or the MISERIES of WAR; written in the Iſle of Thanet, 1794.

By Mrs. MOODY.

A BALLAD.

ON Thanet's rock, beneath whoſe ſteep,
Impetuous rolls the foaming deep,
A lowly maid to grief conſign'd,
Thus pour'd the ſorrows of her mind:

And while her ſtreaming eyes purſue
Of Gallia's cliffs the miſty view,
Accurſt ſhe cries that guilty ſhore,
Whence William ſhall return no more.

Thou, cruel war, what haſt thou done!
Thro' thee the mother mourns her ſon,
The orphan joins the widow's cries,
And torn from love—the lover dies.

Ah, William! wherefore didſt thou go
To foreign lands to meet the foe?
Why, won by war's deceitful charms,
Didſt thou forſake thy Anna's arms?

Alas! full little didſt thou know,
The monſter war doth falſely ſhow;
He decks his form with pleaſing art,
And hides the daggers in his heart.

The muſic of his martial band,
The ſhining halberd in his hand;
The feather'd helmet on his head,
And coat ſo fine of flaming red.

With theſe the ſimple youth he gains,
And tempts him from his peaceful plains;
And by this pomp was William led,
The dangerous paths of war to tread.

Fair-ſounding words my love deceiv'd,
The great ones talk'd, and he believ'd,
That war would fame and treaſure bring,
That glory call'd to ſerve the king.

But wiſe men ſay, and ſure it's true,
That war is theft and murder too;
Yet had my William thought it ſo,
He had not gone to fight the foe.

How bleſt could Anna ſee him now,
With ſhoulders bending o'er the plough;
Toiling to ſow his native fields,
And reap the harveſt Virtue yields.

Then happier lot would both betide,
A bridegroom he, and I a bride;
But theſe fond hopes return no more,
For dead he lies on yonder ſhore.

O in that battle's diſmal day,
When thou, dear youth, didſt gaſping lay,
Why was not then thy Anna there,
To bind thy wounds with ſofteſt care?

To ſearch with ſpeed the neareſt ſpring,
To thy parch'd lips the water bring,
To waſh with tears thy bleeding face,
And ſooth thee with a laſt embrace?

But thou, amid a ſavage train,
Wert mingled among heaps of ſlain,
Without one friend to here thy ſighs,
Or Anna's hand to cloſe thine eyes.

Thou, cruel war, what haſt thou done!
Thro' thee the mother mourns her ſon,
The orphan joins the widow's ſighs,
And torn from Anna—William dies.

LINES by the Rev. Dr. BOOKER, of Dudley, on his planting ſome Ivy round the Towers of Dudley Caſtle, addreſſed to the IVY TREE.

WIND, gentle evergreen, thy ſpreading arms
Round Dodo's * ancient tow'rs; and, from the blaſt
Of Winter, ſhield them with thy mantling charms,
That they to time's remoteſt morn may laſt.

Lodg'd in thy leaves the birds of various wing
Shall, unreſtrain'd, their moſſy manſions form,
And round each pond'ring viſitant ſhall ſing,
Safe from the truant ſchool-boy and the ſtorm.

Spread, gentle evergreen! thy branches kind
O'er Dodo's caſtle, awful in decay;
Let them around his loftieſt turrets wind,
And deck with ſober green his ruins grey.

Ah! could I thus, the wretched, poor, and old,
(Shatter'd by time and worn by cruel cares)
Shield with a cov'ring from the piercing cold,
And bleſs with Comfort their declining years:

More ſweet, fair evergreen! the taſk would be
Than round theſe aged tow'rs implanting thee.

THE CATERPILLAR.

THE helpleſs crawling caterpillar trace
From the firſt period of his reptile race:
Cloth'd in diſhonour, on the leafy ſpray,
Unſeen, he wears his ſilent hours away;
Till, ſatiate grown of all that life ſupplies,
Self-taught the voluntary martyr dies.
Deep under earth his darkling courſe he bends,
And to the tomb a willing gueſt deſcends:
There, long ſecluded in his lonely cell,
Forgets the ſun, and bids the world farewell.
O'er the wide waſte the wint'ry tempeſts reign,
And driving ſnows uſurp the frozen plain;
In vain the tempeſt beats, the whirlwind blows.
No ſtorms can violate his graves repoſe.

* Dodo, a Saxon General, built the Caſtle, about A. D. 700.

But when revolving months have won their way,
When ſmile the woods, and when the zephyrs play,
When laughs the vivid world in ſummers bloom,
He burſts and flies triumphant from the tomb;
And while his new-born beauties he diſplays,
With conſcious joy his alter'd form ſurveys.
Mark, while he moves amid the ſunny beam,
O'er his ſoft wings the varying luſtre gleam.
Launch'd into air, on purple wings he ſoars;
Gay nature's face with wanton glance explores;
Proud of his various beauties, wings his way,
And ſpoils the faireſt flowers, himſelf more fair than they.
And deems weak man the future promiſe vain,
When worms can die, and glorious riſe again?

Address to a Dying Infant.

TENDER ſoftneſs! Infant mild!
Perfect, ſweeteſt, loveliest child!
Tranſient luſtre, beauteous clay!
Smiling wonder of a day!
Ere the laſt convulſive ſtart
Rend thy unreſiſting heart,
Ere the long enduring ſwoon
Weigh thy precious eyelids down,
Ah! regard a mother's moan,
Anguiſh deeper than thy own!
Faireſt eyes, whoſe dawning light
Late with rapture bleſt my ſight,
Ere your orbs extinguiſh'd be,
Bend their trembling beams on me.
Drooping ſweetneſs! verdant flower!
Blooming, wither'd in an hour!
Ere thy gentle breaſt ſuſtains
Lateſt, fierceſt, mortal pains,
Hear a ſuppliant; let me be
Partner in thy deſtiny.

Rondeau; by Mrs. Radcliffe.

SOFT as yon ſilver ray, that ſleeps
Upon the ocean's trembling tide;
Soft as the air, that lightly ſweeps
You ſail, that ſwells in ſtately pride:
Soft as the ſurge's ſtealing note,
That dies along the diſtant ſhores;
Or warbled ſtrain, that ſinks remote—
So ſoft the ſigh my boſom pours!
True as the wave to Cynthia's ray,
True as the veſſel to the breeze;
True as the ſoul to muſic's ſway,
Or muſic to Venetian ſeas:
Soft as yon ſilver beams that ſleep
Upon the ocean's trembling breaſt;
So ſoft, ſo true, fond Love ſhall weep,
So ſoft, ſo true, with thee ſhall reſt!

SONNET.

GO, pencil! faithful to thy maſter's ſighs;
Go, tell the goddeſs of this fairy ſcene,
When next her light ſteps wind theſe wood-walks green,
Whence all his tears, his tender ſorrows riſe:
Ah! paint her form, her ſoul illumin'd eyes,
The ſweet expreſſion of her penſive face,
The light'ning ſmile, the animated grace,
The portrait well the lover's voice ſupplies;
Speaks all his heart muſt feel, his tongue wou'd ſay:
Yet ah! not all his heart muſt ſadly feel!
How oft the flow'rets ſilken leaves conceal
The drug that ſteals the vital ſpark away!
And who that gazes on that angel-ſmile,
Would fear its charm, or think it would beguile!

The WISH: To a Friend.

THE muſe who ſtruck to moral ſtrains the lyre,
Now turns to court a viſionary theme,
To frame the wiſh which flattering hopes inſpire,
When fancy revels in her golden dream.

I aſk no lone retreat, no ſhady grove;
Nor grove, nor bower can boaſt a charm for me;
I muſe on juſtice, liberty, and love,
And, need I, Orſon! tell my wiſh to thee?

I bend, great juſtice! at thine awful throne,
Eternal arbiter of good and ill;
The ſons of ſoul ſhall make thy laws their own,
And form their dictates by thy ſov'reign will.

But oft perverted is thy high behoſt,
And oft I'm doom'd oppreſſion's rod to ſee;
I ſee wealth triumph, and the poor oppreſt,
And, need I, Orſon! tell my wiſh to thee?

How bounds the ſoul at freedom's ſacred call!
How ſhrinks from ſlavery's heart appalling train!
But ſtill her victims avarice will inthral,
Afric's ſad ſons ſtill wear the accurſed chain.

Still power deſpotic, with ambition join'd,
Would cruſh the ſoul determin'd to be free;
I ſee debas'd man's dignity of mind,
And, need I, Orſon! tell my wiſh to thee?

Were juſtice followed, then would man be good;
Were freedom guarded, then would man be bleſt;
No generous impulſe of the ſoul ſubdu'd,
But love unfraught with anguiſh fill the breaſt.

I felt the magic of Lucinda's eye,
I thought her charms were of no mean degree;
Lucinda's name inſpir'd the ſecret ſigh,
And, need I, Orſon! tell my wiſh to thee?

One only wiſh remain'd! oh, might I find,
Amid this ſcene of danger and of ſtrife,
Some kindred ſpirit, ſome congenial mind,
To cheer my journey through the vale of life.

Indulgent heaven vouchſaf'd the boon to ſend;
A youth I found, and juſt and mild was he;
My heart ſprang mutual to embrace its friend,
And, need I, Orſon! name that friend to thee?

CANZONET.

CAN aught be more fair to the eye
Than the bluſh of the maidenly year?
Can aught with the orchard bloom vie
When in May its ſweet bloſſoms appear?
Can aught like the eglantine pleaſe,
Or the roſe budding: tell me what can?
O thrice more attracting than theſe
Is the cheek of my ſweet little Anne.

What can charm like the ſpring of the field
When it trickles tranſparently by?
Or what ſweeter pleaſure can yield,
Than to look on the gems of the ſky?
What can win like the tremulous dew,
Which the zephyrs on goſſamer fan?
O thrice more enchanting to view
Is the eye of my ſweet little Anne.

Can aught like the morning delight
When it dawns toward peaceable day?
Or bewitch like the planet of night
When ſhe ſteals in goo humour away?
Is there aught like the ſweetneſs of eve,
When ſerene as when nature began
The ſoft ſun takes his mellow laſt leave?
Yes, the ſmiles of my ſweet little Anne.

Can aught more delicious be nam'd,
Than the exquiſite fruit of the pine?
More inviting can aught be proclaim'd
Than the elegant bunch of the vine?
Is there aught can in flavour exceed
Ev'ry beverage precious to man?
O yes, theſe are taſteleſs indeed
To the kiſs of my ſweet little Anne.

Thrice more than the ſun-ſetting hour,
Or the dawn of the morning benign,
More delightful than ſpring's ſweeteſt flow'r,
Or the mirth-making juice of the vine,
More ſerene than the gems of the ſky,
And more ſoft than the down of the ſwan,
Is the cheek, is the lip, is the eye,
Is the ſmile, of my ſweet little Anne.

LINES written by a LADY, aged Ninety-two, on receiving a Piece of BRIDE-CAKE, which ſhe was aſſured had been drawn through the Ring.

HOW kind, yet how cruel, to put me in mind
That your cake I can never return you in kind;
But the myſtical morſel plac'd under my pate,
Made me happy in dreaming I choſe my own mate.

Tho', ſoon as the clerk had pronounc'd his amen,
I awoke, and alas! I was fourſcore and ten,
May you taſte all the bleſſings your union muſt claim,
And never awake from ſo pleaſing a dream.

INSCRIPTION for a MEDICINAL FOUNTAIN at the LEASOWES.

By Mr. SHENSTONE.

THOU ſacred Nymph! whoſe pious care
Pours from thine urn this min'ral rill,
Whoſe healing draughts, like cryſtal fair,
In pleaſing murmurs here diſtill;

Who guid'ſt the ſtream, and joy'ſt to dwell
Where murmurs ſoft with uſe agree;
May Phœbus haunt this hallow'd wall,
And all his ſiſters learn of thee!

CONQUEST OF HOLLAND.

THE operations of the British army in Holland, as detailed in the London Gazettes, we have regularly given down to the latest period. The continuance of the very severe frost, which facilitated to the French the passage of the rivers which nature had opposed to their progress, effected, at last, the entire reduction of the country. One of the consequences was, a long interruption in the correspondence between England and Holland, which rendered it difficult to know the true state of the proceedings of the French in that country. From recent accounts, however, it appears, that the latter do not seem desirous to treat the Dutch as a conquered, but as a free and independent people, their friends and allies; and that the latter, in consequence, have established a provisionary government, the basis of which is the utter exclusion of a stadtholder.

When the patriots were compelled, in 1787, to submit to the superior ascendency of the stadtholderian party, in consequence of the naval preparations of Great Britain, the actual invasion of the country by Prussia, and the inability of the old government of France to afford them any assistance, it was easy to foresee, that the patriots would seize the first favourable opportunity of effecting a revolution, to the destruction, if possible, of the stadtholderate; and it was well known, that their greatest strength lay in the city of Amsterdam. Accordingly, on the 19th of January, when a party of French hussars took possession of that city, the greatest rejoicings took place. The tree of liberty was planted in various parts. The people immediately mounted the national cockade, and nothing but *Vive la republique, vive la liberté*, &c. were heard in the streets. Dr. Krayenhoff (a gentleman who had been lately banished from the town) arrived with a letter from the French general, which prepared the regency for the reception of the French army. Five thousand men, with general Pichegru at their head, entered the next evening. Much to the honour of the French troops, and of the people at the head of affairs, no riot of any kind took place; and not a single citizen was injured, either in person or property.

The patriots had acted so thoroughly in concert with the French, that the Orange party found new constituted authorities, while they were doubting whether the French had advanced as far as Utrecht. The inhabitants, on waking in the morning, beheld the national colours waving over the Hotel de Ville, and instantly the tri-coloured cockade was worn throughout the city.

The following is the copy of the first Gazette published at Amsterdam, after this event.

LIBERTY! EQUALITY! FRATERNITY!
Anno 1795. N. I.

Amsterdam Gazette Extraordinary.

Published by Cornelius Van Leeuwen.

Tuesday, January 20.

Amsterdam, Jan. 19, the first Day of Liberty.

Yesterday morning much sensation was discovered among the people, occasioned by the approach of the free French; and some persons, who had for some time been occupied in bringing about a happy revolution in this city, thought it best that the citizens should be armed, and proposed the same to the presiding burgomaster Straatman, as the means of preserving public tranquillity, which was at last agreed to. In the mean time the burgher Krayenhoff, and another French officer, arrived in this city with accounts of the assistance the burghers had to expect if they wished to make themselves free, which changed the scene. The commandant Golloskin entered into negotiations; and, being much pressed, gave the necessary orders to the garrison not to oppose or molest the burghers. The burghers then issued the following publication:

LIBERTY! EQUALITY! FRATERNITY!

Dear Fellow-citizens,

To prevent all confusion and disorders, it is notified to the good citizens, that the burghers, who have taken the business of the revolution upon themselves, have in your name, given notice to the present commandant of this city, general Golloskin, that he should give up that charge from to-morrow morning, and have by provision named citizen Cornelius Rudolph Theodorus Krayenhoff to be commandant, hoping that this step, taken in your name, will be approved by you; and we trust you will unite your endeavours to ours to keep peace and tranquillity, and to prevent either persons or property from suf-

feri any injury, and particularly that none of the military be ill-treated or inſulted.

This is both our deſire, and that of our friends the French, and alſo of the worthy Krayenhoff: and if, unexpectedly, either citizens or military ſhould want any aſſiſtance, they may apply for the ſame to the revolutionary committee, which holds its ſittings at the cherry-tree, in the Kalverſtraat.

Publiſhed Jan. 18, 1795, the firſt year of liberty, in the name of the revolutionary committee.

P. J. B. C. VANDER AA, Secretary.

The revolutionary committee were buſy the whole night in preparing a new repreſentation for the burghers, and in the morning they went to the Stadthouſe, took poſſeſſion of the burgomaſter's apartment, and then went to the council-chamber, and read a paper to the ſitting council, by which they were diſmiſſed from their employments, and ordered to quit the chamber, which they accordingly did; upon which the following propoſal was read to the burghers aſſembled before the Stadthouſe, which was received with acclamations and approved, as were alſo the propoſed perſons.

PROCLAMATION of the REVOLUTONARY COMMITTEE of AMSTERDAM.

Brave Citizens,

We G. Pruys, S. Wiſſeleus, J. J. A. Goges, J. Thoen, D. Von Laer, J. Ondoup, E. Vandenſluis, P. Ducreult, J. Van Haſſen, P. J. B. P. Vander Aa, forming your revolutionary committee, hail you with vows of health and fraternity.

By the mighty aid of the French republic, and by your own energy, you have caſt off the tyranny which oppreſſed you. You are once more in poſſeſſion of your rights.

YOU ARE FREE, YOU ARE EQUAL!

Your tyrants have fled from their poſts.

Fellow-citizens, you may follow with confidence and ſecurity your uſual avocations. Your perſons, your properties, ſhall be protected.

We propoſe to you to name as your proviſional repreſentatives the following burghers. Be aſſured that they will watch over and protect your rights, your intereſts, and your liberties.

The citizens whom we propoſe are:

N. Van Staphorſt, J. Van Pieterſe, A. P. Leyden, G. Titſingh, J. Van Eys, W. Vander Vuurſt, J. Teyſſet Junia, J. W. J. Van Dam, S. Bos, G. H. de Wilde, H. T. Kate, Karel d'Amoer, H. Van Caſtrop, R. I. Schimmelpenning, N. Breukelaar, G. Vander Zoo, D. Vanaken, J. L. Hendreks, M Van Maurick, J. Galdberg. J. Van Lang.

Chooſe, fellow-citizens, theſe patriots as your repreſentatives, that, in the name of the people of Amſterdam, they may forthwith enter upon the adminiſtration of your affairs.

We once more hail you, worthy fellow-citizens. By your own patriotiſm, with the aid and under the guidance of ſuch repreſentatives, order, tranquillity, and happineſs, will reign in this city. The Frenchmen who are among us conduct themſelves, indeed, like brethren. Every idea of plunder, of rapine, or of injuſtice of any kind is unknown to them. Fraternity with them, as with us, is the ſole order of the day. In the name of the revolutionary committee,

P. J. B. C. VANDER AA.

Amſterdam, Jan. 19, 1795, and the firſt day of Dutch freedom.

The ſtadtholder and his family, and the whole court, with lord St. Helen's, the Britiſh ambaſſador, left the Hague, on Sunday the 18th, for Scheveling; and the following days, the French were employed in taking peaceable poſſeſſion of Leyden, Rotterdam, Dort, &c. the inhabitants of which ſeemed to welcome them as friends and deliverers. Bergen-op-Zoom, Williamſtadt, and other ſtrong towns, whoſe garriſons might have made a long reſiſtance, ſurrendered immediately, in conſequence of a requiſition to that effect contained in a proclamation iſſued by the ſtates-general.

Theſe events were firſt communicated to the national convention, in the following letter from the commiſſioners with the army of the north.

Nimeguen, Jan. 17.

Citizen colleagues, the rigours of the winter, which uſually put an end to campaigns, have been to the troops of the republic the ſignal of new victories. The love of their country which guides them, allows them not to reſt, and makes them undertake every thing when the ſafety and glory of their country are concerned. Exceſſive cold having frozen over the rivers and canals that render Holland almoſt impracticable, they availed themſelves of this revolution in the elements, to attempt the

conquest of it at full charge. Their success has been equal to their courage. We have communicated to you their first exploits; their passing the Waal, and the capture of the isle of Betuwe. You are informed of the surrender of Heusden, with 175 pieces of cannon, and 150,000 pounds weight of powder. We now announce to you that they are beyond the Leck, and occupy Montfort and Utrecht. The whole country, as far as Amersfort, is evacuated by the enemy, and at our disposal, as well as the lines of Grepe, from which the few troops left in them are driven, and in which we found about eighty pieces of cannon and twenty ammunition waggons. The enemy, in their precipitate flight, abandoned their sick at Rhenen, and the British general recommended them to the French generosity. Health and fraternity!

BELLEGARDE, J. B. LACOSTE, JAUBERT.

In the sitting of the convention on the 25th, Carnot announced the conquest of Holland, 'we have received, he said, the following report from the army of the north.

Amsterdam, Jan. 21.

The representatives of the people with the army of the north, &c. We are at Amsterdam, dear colleagues, and all Holland is in the hands of the republic. The stadtholder is fled, and his whole family with him. A few strong places still hold out, but will soon open their gates, as for that purpose they have already received the necessary orders from the states-general. The advantages we are to reap from this glorious conquest are immense, and baffle all calculation. It puts the republic in possession of treasures, magazines, arsenals, dock-yards, vessels, &c. and affords it a decided preponderance in the affairs of Europe. Two of our colleagues are on the point of proceeding to Paris, to inform the committee of further particulars. We are at a loss to describe the frankness and fraternity, with which we have been received by the inhabitants of this country.'

On Monday, Jan. 26, Richard, from the committee of public safety, communicated the following letter:

Amsterdam, Jan. 21.

The conquest of the United Provinces is going on as happily as it commenced. The whole of the three provinces of Guelders, Utrecht, and Holland, are in possession of the republic. Gertruydenburg, Dordrecht, Gorcum, and Oudenster, capitulated yesterday. The cold is still excessive; but the perseverance of our armies in following up their rapid conquests is undiminished. Day and night they brave the weather, make marches of several leagues upon the ice, roll cannon and ammunition waggons on the Meuse, the Waal, and the Leck, and make the frozen surfaces of those rivers serve as means of attacking the ramparts that were intended to annihilate them.

PROCLAMATION signed at the Hague, on the 27th of January 1795.

The states-general of the United Provinces, to all who shall see or hear these presents, greeting, give to know, that the representatives of the French nation now in this country have intimated to us, that it is necessary that speedy provision should be made of several articles appertaining to the subsistence and cloathing of the French troops, namely the following:

200,000 quintals of corn
5 millions of rations of hay, at 15 lb. each,
5 millions measures of oats, at 10 lb. each, heavy weight,
200,000 rations of straw, at 10 lb. each,
150,000 pair of shoes,
20,000 pair of boots,
20,000 cloth coats and waistcoats,
40,000 pair of stocking breeches,
150,000 pair of trowsers of coarse linen,
200,000 shirts,
50,000 hats,

All which are to be delivered at Nimeguen, Thiel, and Bois-le-Duc, within the space of one month, in three instalments; and beside—

12,000 oxen, within two months.

The above-mentioned representatives have also added, that, instead of following the practice introduced in other countries which their troops have entered, namely, that the requisition of similar articles has been made, published, and carried into execution by themselves, they have chosen to treat this republic in another manner, and thereby prove the inclination of the French nation, to consider it in the light of an approaching ally; and, of consequence, have begged of us to effectuate the delivery of the abovementioned necessaries, in the specified quantities, and at the appointed times and places, adding at the same time, that the payment shall be regulated according to the ar-

rangements which ſhall afterward be made with the government.

To the above ſtatement the ſtates added the moſt urgent exhortations to all perſons concerned to comply with the ſaid requiſition, on pain of the conſequences that would attend their non-compliance.

On Jan. 21, the French publiſhed the following proclamation of the repreſentatives of the French nation to the people of Batavia.

Amſterdam, firſt of Pluvioſe (Jan. 21) in the third Year of the French Republic, one and indiviſible.

The Repreſentatives of the French Nation with the Armies of the North, the Sambre, and the Meuſe, to the People of Batavia.

The tyrants who have combined againſt the freedom of nations, declared war againſt us, and threatened to conquer and ſubjugate us.

The treacherous ſtadtholder, having reduced your government under his power, entered into the baſe confederacy formed by the tyrants, to force a great people to ſubmit to the yoke of ſlavery.

Your blood, your treaſures, were laviſhed for this vile purpoſe; but the ſucceſs of our arms has made manifeſt the juſtice of our cauſe, and our all-conquering armies have entered into your country.

Batavians! we knew you too well to imagine you could be accomplices in ſo abominable a conſpiracy. Our enemies are alſo yours. The blood of the founders of the republic of the United Netherlands ſtill flows in your veins; and in the midſt of the confuſion of war we conſider you as our friends and allies. It is under this name that we enter your country. We ſeek not to terrify but to inſpire you with confidence. It is but a few years ſince a tyrannic conqueror preſcribed you laws; we have aboliſhed them, and reſtore you to freedom.

We come not to make you ſlaves; the French nation ſhall preſerve to you your independence.

The armies of the republic ſhall obſerve the ſtricteſt military diſcipline.

All crimes, and civil offences of citizens againſt citizens, ſhall be puniſhed with the moſt rigid juſtice.

Perſonal ſafety ſhall be ſecured, and property protected.

The freedom of religious worſhip ſhall ſuffer no reſtraint.

The laws and cuſtoms of the country ſhall be, proviſionally, maintained.

The people of Batavia, exerciſing that ſovereignty which is their right, ſhall, alone, poſſeſs the power to alter and modify the form of their government.

GILLET, BELLEGARDE, J. B. LACOSTE, JOUBERT, PORTIEZ de L'OISE.

Such are the lateſt accounts from Holland, by which it appears that the revolution is complete. All the Engliſh ſhips that were in the Dutch harbours are in the power of the French; and, on the other hand, all the Dutch ſhips that were in our ports are detained. His ſerene highneſs the ſtadtholder and his family have, for ſome time, taken up their reſidence at Hampton-court; and the correſpondence between England and Holland (except occaſional communications by flags of truce) is, for the preſent, ſuſpended.

As the circumſtances and ceremonies that preceded the ſtadtholder's departure from Holland have never been accurately detailed, we preſent our readers with the following account, extracted chiefly from the regiſters of the ſtates-general:

It was on the evening of the 16th of January, that the ſtadtholder, in the aſſembly of the ſtates of Holland, requeſted that his two ſons might be permitted to reſign the ſituations which they held in the army of the republic. The requeſt was inſtantly complied with. On the next day he aſſiſted again at the deliberations of the two aſſemblies, and obtained the neceſſary diſpoſitions for abſenting himſelf from the United Provinces. The ſtates-general, however, appointed previouſly a committee to examine the documents and repreſentations laid before them by the ſtadtholder. After the committee had made their report, the ſtates-general came to the following reſolution:

Sunday, Jan. 18.

We have heard the report of meſſ. De Grotenray, and other deputies for military affairs; we have alſo examined a letter from his highneſs, dated from the Hague, this day, and ſtating 'that as from the ſituation of the republic, his highneſs foreſees the fate that awaits the country in caſe the enemy penetrate further, and as he is unwilling to be an obſtacle to the making of peace, he has taken the reſolution to retire for a time out of the country; he hopes that their high mightineſſes will not diſapprove of this ſtep, and he prays that the Supreme Being will beſtow his bleſſings upon the provinces, and reſtore them to their former proſperity.

'His highneſs proteſts that he has done every thing in his power for the good of his country. He expreſſes his regret, that he has not been able to do more for the general good; and he aſſerts, that if circumſtances permit him to be again uſeful to his country, their high mightineſſes ſhall always find him ready to exert his utmoſt endeavours. He concludes, by informing the ſtates-general, that his two ſons, who have received permiſſion to reſign their military commands, will leave the country with him.'

The ſtates-general having taken the above circumſtances into their conſideration, and having conſidered that the exiſting circumſtances require immediate meaſures, and that the ordinary forms of diſcuſſion and deliberation cannot be followed, decree previouſly, that what ſhall be done and reſolved upon, in the preſent poſture of affairs, is not to be conſidered as a precedent; without any prejudice, therefore, to any ulterior deliberation, it is determined, that information ſhall be communicated to the commanders of regiments and corps in the ſervice, as well as to all governors and commanders of towns and places occupied by the troops of the ſtate, that the prince of Orange and Naſſau has abſented himſelf for ſome time, and that the princes of Orange, his ſons, have been diſcharged from the command of the army. All colonels or commanding officers, as well as governors and commanders, are therefore to addreſs themſelves proviſionally to the council of ſtate of the United Low Countries on the ſubjects of thoſe orders, which they have hitherto received from the ſaid princes. It is alſo decreed, that the private ſecretary of his highneſs, Larrey, ſhall be written to, to ſend immediately to the council all letters addreſſed to his highneſs on military affairs.

THE THEATRE.

ON Saturday, Feb. 28, a new comedy, called THE WHEEL of FORTUNE, written by Mr. Cumberland, was performed, for the firſt time, at the theatre-royal in Drury-lane; the principal characters of which were thus repreſented:

Governor Tempeſt, Mr. King; Roderick Penruddock, Mr. Kemble; ſir David Daw, Mr. R. Palmer; Mr. Woodville, Mr. Whitfield; Henry Woodville, Mr. C. Kemble; Mr. Sydenham, Mr. Palmer; Lawyer Weazle, Mr. Suett; Footman, Mr. Bland:—Emily Tempeſt, Miſs Farren; Mrs. Woodville, Mrs. Powell; Servant maid, Miſs Tidſwell.

The outlines of this play are briefly thus: Roderick Penruddock, in his juvenile years, becomes enamoured of Arabella, an amiable lady, and is about to be made happy by an union with her, when having ſome preparatory matters to arrange, Woodville, his acquaintance, ingratiates himſelf with her relatives, and having the advantages of ſuperior fortune on his ſide, obtains the hand of the lady in marriage. The diſappointment which Penruddock thus experiences, cauſes him to retire in diſtraction to a cottage, where he lives in obſcurity and ſilent ſtudy for ſeveral years, determined never to forgive the breach of friendſhip on the part of Woodville. During this period, Woodville diſſipates his fortune by gambling, and is under the neceſſity of mortgaging the whole of his eſtates to the uncle of Penruddock (ſir George) who dying without iſſue, the whole of his property devolves to his nephew Roderick. When he takes poſſeſſion of the manſion, he is very much diſguſted with the ſuperfluous ſhow of decorations, and regrets being drawn by the viciſſitudes of fortune from his cottage of comfort and retirement. He is now viſited by Henry Woodville, an officer juſt arrived from foreign ſervice, whom he informs of the conduct of his father toward him. The behaviour of the young gentleman, and the diſtreſſes of his mother, induce Penruddock to relax in the ſeverity with which his reſentment had urged him to treat Woodville, and reſtore to them their fortune. There is another plot ariſing from Emily Tempeſt being ſolicited in marriage by ſir David Daw, an ignorant Welſh fop, whoſe abſurd manners and ſtupidity at length irritate the governor ſo much, that he no longer inſiſts on his daughter forming an union with the baronet, but conſents to beſtow her hand on Henry Woodville. Thus the piece concludes, to the ſatisfaction and happineſs of all parties.

This play claims no novelty of character, except in the miſanthrope Penruddock, who is a refined counterpart of the author's Jew. This part is, however, delineated with many exquiſite tints of a maſterly pencil. The triumph of the finer feelings of benevolence, over thoſe of a long rooted revenge, is wrought up

with exquiſite pathos, and as finely played by Kemble: and his chair ſcene with the ſon of his once loved Arabella is, perhaps, at the full height of the inimic art.

On Thurſday, March 19, a new comedy, called LIFE'S VAGARIES, was performed, for the firſt time, at Covent-garden theatre. It is the production of Mr. O'Keeffe. The characters were:

Lord Arthur D'Aumerle, Mr. Lewis; ſir Hans Burgeſs, Mr. Munden; Dickens, Mr. Quick; George Burgeſs, Mr. Fawcett; Felix Timolin, Mr. Johnſtone; lord Torrendal, Mr. Bernard:—Lady Torrendal, Mrs. Pope; Miſs Dickens, Mrs. Lee; Auguſta Woodbine, Miſs Wallace.

The fable is as follows: Lord Torrendal is a debauched old nobleman, who, for the purpoſe of indulging his gallantries without reſtraint, leaves his lady at one of his country houſes, and pretends to make a journey to Liſbon for the benefit of his health, but in reality retires to another eſtate, and by means of Dickens, a ſupple trafeſman, and an artful French valet, keeps up a correſpondence with his wife as if he were abroad. This nobleman had ſeduced a lady, by whom he had a ſon, whom he intended to ſend to India, but his valet deceives him, and converts to his own uſe the money intended to fit the young man for the voyage. This illegitimate offspring of lord Torrendal aſſumes the title of lord Arthur D'Aumerle, and being extremely lively, though poſſeſſing a good heart, he runs into debt, and viſits the neighbourhood where his father reſides.

Sir Hans Burgeſs is the guardian of Auguſta Woodbine, an amiable young lady; and, in order to get her to marry his ſon George, he induces Dickens to make her believe that her deceaſed uncle had made another will, by which he had deprived her of all the fortune ſhe expected under a former one. Sir Hans hopes that her humiliation will induce her to catch at any matrimonial alliance to remain in her former condition. Under the ſuppoſition of having loſt her fortune, Auguſta accepts the office of governeſs to the daughter of Dickens. It happens that lady Torrendal viſits the place where her huſband is purſuing his gallantries, juſt at the time when he has formed a ſcheme to ſeduce both Auguſta and miſs Dickens. The licentious old nobleman is at length brought to a ſenſe of his diſhonourable conduct; he takes his natural ſon into his protection; Dickens gives his daughter to George Burgeſs, between whom and her there has been a long attachment; lord Arthur D'Aumerle, as he is called, unites with the amiable Auguſta, and all are in the end made happy.

It is impoſſible to give all the whimſical incidents which form the maſs of this irregular, but entertaining drama; but it certainly excited much laughter; and was, on the whole, very well acted.

PROCEEDINGS *of the Fifth* SESSION *of the Seventeenth Parliament of* Great Britain; *continued from Page* 134.

ON Wedneſday, Feb. 4, in the houſe of commons, the chancellor of the exchequer delivered the following meſſage from his majeſty:

G. R.

'His majeſty thinks it proper to acquaint his houſe of commons, that he has received from the emperor ſtrong aſſurances of a diſpoſition to make the greateſt exertions for the common cauſe in the courſe of the next campaign; but it is repreſented on the part of his imperial majeſty, that theſe efforts cannot be made without the aſſiſtance of a loan, which his imperial majeſty is deſirous of raiſing on the credit of the revenues of his hereditary dominions, under the guarantee of his majeſty, with the concurrence of parliament, to the extent of four millions; and it is ſtated that ſuch a loan, in addition to his other reſources, would enable his imperial majeſty to employ againſt the common enemy a force of 100,000 men.

'His majeſty is of opinion that on theſe grounds ſuch an arrangement would be beneficial to the common cauſe; but his majeſty thinks that it would be ſtill more advantageous, if by the means of a ſimilar loan to a larger extent, the emperor ſhould be enabled to employ a force ſtill more conſiderable, and his majeſty had directed his miniſter at Vienna to expreſs his majeſty's readineſs to recommend to his parliament an arrangement founded on that principle.

'Some temporary advance which his majeſty was induced to make for the immediate ſupply of the Auſtrian army, under the preſſure of unforeſeen circumſtances in the latter part of the laſt cam-

paign, will be included in any arrangement of this nature.

'As soon as the negociation is concluded, his majesty will not fail to communicate the result to parliament. But as any measure of this sort is necessarily connected with the consideration of the provision to be made for the current year, his majesty has thought it right not to delay making this communication: and he relies on the zeal and public spirit of his faithful commons, for taking such measures as, on a full consideration of all the circumstances, they may think most conducive to the immediate interests of this country at the present conjuncture, and to the great object of re-establishing, on secure and honourable grounds, the peace and tranquillity of these kingdoms, and of Europe. G. R.

This message was ordered to be taken into consideration the next day. A similar message was delivered in the house of lords, and ordered to be taken into consideration on Monday.

In the house of commons, on Thursday, Feb. 5, Mr. Hobart presented a petition for peace from Norwich.

Mr. Sheridan then rose, and said, that from the papers which had been laid upon the table, relative to the subsidy to the king of Prussia, it appeared that monarch had done nothing for it; which should render us cautious of reposing trust in any of the powers now in alliance with us. He moved, therefore, to resolve, 'That the king of Prussia had received 1,200,000l.' pursuant to treaty, none of the stipulations of which he had performed. Mr. Jekyl seconded the motion, and insisted that the British money was diverted to the detestable purpose of dismembering Poland. On the other hand, Mr. Pitt contended, that, though his Prussian majesty had not adequately performed his engagements, he had yet rendered services so essential, that the expence at which they were purchased was not to be regretted. He should, therefore, move the order of the day. This motion being put, was carried by 128 to 32.

Mr. Pitt then rose to submit to the house the consideration of the royal message concerning the Austrian loan. He expatiated on the policy of procuring the assistance of a powerful army of Austrians; and, speaking of the finances of France, he represented their great opulence as merely artificial, created by every mode of violence and extortion, and which must, in course, speedily be exhausted. He insisted, that by powerfully pressing the French on the continent, we should very materially divert their attention from their marine. He stated a variety of particulars to show, that the security the emperor had proposed was unexceptionable; and that, exclusive of his honour and good faith, there were such powerful motives of interest to influence his conduct, that his punctual observance of the stipulations of the treaty could not reasonably be doubted. He concluded by moving an address, promising a concurrence in his majesty's wishes, in nearly the terms of the message.

Mr. Fox said, that Mr. Pitt's statement of the French finances was fallacious, and founded upon speeches made in the convention merely for party purposes. He denied that the continuance of our continental exertions could materially divert the attention of the French from their marine. He said, that the opinion formed by the best judges (the monied men in the city) of the security proposed for the loan was manifest, from their unanimously rejecting it, without the guaranty of parliament, although on the high terms of 7½ per cent. He concluded by moving an amendment, tending to defeat the purpose of the address. On a division, the amendment was lost by 173 to 58, and the motion for the address was then put and carried.

On Friday, Feb. 6, a petition from York, and another from Southwark, praying, in general terms, for peace, were presented, and ordered to lie on the table.

Mr. Grey then rose, to renew the agitation of a question, which, after the frequent discussions it had undergone, could scarcely appear in any new point of view. We shall, therefore, only state the motion with which he concluded his speech:—'Resolved, That we have no other object in view in the further prosecution of the war, than to procure a safe and equitable peace, and that we may, as other of the belligerent powers have done, acknowledge that there exists a competent power in France to maintain the relations of unity and amity; and therefore every former difficulty being removed, we may proceed to negociate on just and equitable grounds to both parties, for the termination of a war that must ultimately prove destructive to one of them.'

This was strenuously opposed by administration; and Mr. Dundas moved the previous question, which was carried by 290 to 60.

In the houſe of lords, on Monday Feb. 9, the royal meſſage, reſpecting the Auſtrian loan, underwent a diſcuſſion; and an amendment to the motion for an addreſs, ſimilar to that in the houſe of commons, having been moved, was negatived without a diviſion.

The ſame day, in the houſe of commons, leave was given to bring in a bill, to amend ſo much of an act of the 9th of Geo. I, as prevented relief from being given to the poor, at their own houſes, in certain caſes.

Mr. Huſſey then preſented a petition from Saliſbury, praying the houſe to take the moſt ſpeedy methods to obtain an honourable peace.

On Thurſday, Feb. 12, a motion, ſimilar to that made on Friday the 6th, by Mr. Grey, was made by the duke of Bedford, and rejected on the ſame grounds; after which the following proteſt was entered on the journals:

Die Jovis, 12th Feb. 1795.

The order of the day being read for the lords to be ſummoned, it was moved to reſolve, 'That it is the opinion of this houſe, that the actual ſituation of the governing powers in France ought not to preclude the concluſion of a ſpeedy peace, if peace can be had upon ſuch terms as are in themſelves juſt and reaſonable; but if the ambition of France ſhould lead her to perſevere in hoſtilities, either for the purpoſe of her own aggrandiſement, or to carry into effect the principles of her own government in other countries, this houſe feels itſelf called upon firmly and ſteadily to ſupport his majeſty in the vigorous proſecution of the preſent war.'

Which being objected to, and a queſtion ſtated thereupon, after a long debate, the previous queſtion was put, whether the ſaid queſtion ſhall be now put:

Reſolved in the negative.

Contents	12	15	Not contents	75	101
Proxies	3		Proxies	26	

Diſſentient,—Becauſe we conceive the repeated declarations made in the name of the king, and the reſolutions come to by this houſe, are, as they now ſtand, an effectual bar to all negociation with the preſent government of France, which can alone be removed by a reſolution of a ſimilar nature to that avoided by the previous queſtion, and which is become the more neceſſary from the declaration of his majeſty's miniſters in debate, that the government of France is of ſuch a character as to preclude the poſſibility of treating ſo long as they ſhall continue to act on their preſent principles; a declaration which we conceive to convey little leſs than a determination to carry on the war upon ſuch principles, that it can alone be terminated by the deſtruction of one or both the nations.

BEDFORD, BUCKINGHAMSHIRE, LAUDERDALE, GUILFORD.

On Tueſday, Feb. 17, Mr. Lambton preſented a petition from the city of Durham, praying for a ſpeedy peace; and the attorney-general preſented a counter petition from the ſame place. A petition for peace was alſo preſented from Carliſle.

On Thurſday, Feb. 19, col. Stanley preſented a petition from Mancheſter, and general Tarleton one from Liverpool, praying for a ſpeedy peace. A counter-petition from Liverpool was preſented by Mr. Gaſcoyne, and Mr. Thornton preſented a counter-petition to that which he had before preſented from Southwark.

On Monday, Feb. 23, in a committee of ſupply, Mr. Pitt proceeded to open the budget. He firſt ſtated the ſeveral amounts of the expences for the navy, the army, the ordnance, and for miſcellaneous ſervices; which, with the proviſion for the payment of exchequer bills, the deficiencies in the land and malt tax, &c. &c. made a total of 27,440,584l.

He then recapitulated the details of the ways and means, and ſtated the deficiency, to meet which a loan was propoſed to the amount of above eighteen millions, to which there would probably be a neceſſity of making an addition.

He next ſtated the conditions of the loan, which he could not but regard as fair and liberal on all ſides; to prove which he went into a nice minuteneſs of financial detail. The terms were as follow: 100 in 3 per cents. which made 64l. 15s.—in the 4 per cents. 27l, 15s.—and in the long annuities, 8l. 18. 6d.—In all, 110l. 11s. 6d.

Mr. Pitt next entered on the ſubject of the new taxes, a ſubject which gave him much anxiety and concern; but from which he was not a little relieved by the pleaſing conviction he had of the high ſtate of our revenue, and the extended ſcale of our reſources. He moreover felt no ſmall ſatisfaction that they were not calculated to preſs hard on the lower claſſes of the community, as they would principally fall on articles of luxury, and effect, in a very ſmall degree, thoſe of neceſſary uſe. The firſt article was that of wine, on which he would propoſe a tax of 20l. per ton, or 6s. per dozen, which

he expected would annually produce about 500,000l.

The next was an additional tax of 8d. per gallon on rum, 10d. on brandy, and 1d. on British ſpirits, which he expected would amount in all to near 259,000l.

An additional tax on licences for ſtills in Scotland would afford 15,000l.

He then adverted to the article of tea. By a tax of 7l. 10s. per cent. the revenue would be benefited 180,000l.

On the articles of coffee, cocoa, &c. he would impoſe 6d. per lb. additional, which would bring in 40,000l.

The next tax would fall upon inſurances on ſhips, cargoes, and lives, from which would reſult 160,000l. On other articles of ſmaller concern, and in the department of the cuſtoms, viz. on raiſins, lemons, oranges, ſallad oil, raw ſilk, coals exported (except to Ireland and our own colonies) rock ſalt, deals and fir, a ſmall increaſe of tax would afford 198,000l. He alſo deemed it no unproductive tax to add ſomething to that already impoſed by ſtamp duties, to wit, on affidavits, writs, original agreements, indentures, probates of wills, receipts, &c. and which would produce 68,000l.

Mr. Pitt now adverted to the privilege of franking; a privilege to which, on a variety of accounts, they were juſtly entitled. What he intended to propoſe could only tend to correct the abuſes of it, and the new regulations, it was ſuppoſed, would produce 40,000l.

Another article, which he deemed a proper article of taxation, was hair-powder.—It was his intention, that all perſons who uſed that article ſhould take out a licence, coſting 1l. 1s. per annum; and as the number of perſons uſing it were eſtimated at 200,000, it would produce the ſum of 210,000l.

He next recapitulated the ſums total reſulting from his different ſtatements of the ſupply, ways and means, and taxes as under:

SUPPLY.

Navy—100,000 ſeamen,	£. 5,200,000	0	0
Ordinary,	589,683	3	9
Extraordinary,	525,840	0	0
	£. 6,315,523	3	9
Army—guards and garriſons, 11,000 men	2,777,534	19	1
Plantations, Chelſea, &c.	2,563,734	19	3
	£. 5,341,269	18	4
Militia and fencibles, cloathing ditto, conveyances	1,607,233	12	0
Foreign troops	997,226	0	0
French corps	417,269	0	0
Roads and bridges, North Britain	4,500	0	0
Extraordinaries of the army	3,063,968	12	4
Sardinian ſubſidy	200,000	0	0
Ordnance	2,321,010	13	10
Balance due to Landgrave of Heſſe	68,850	12	0½
Ditto to Oſwald's executors	41,688	14	6½
Miſcellaneous Services	257,043	16	5
Annual addition to ſinking fund	200,000	0	0
Deficiency of grants	745,000	0	0
Ditto of land and malt	350,000	0	0
Exchequer bills	5,500,000	0	0
£.	27,440,584	3	3½

WAYS AND MEANS.

	£.
Land tax	2,000,000
Malt	750,000
Growing produce of conſolidated fund from 5th April 1795, to 5th April 1796	2,235,000
Impreſt monies to be repaid	160,000
Eaſt India company	500,000
Exchequer bills	3,500,000
Loan	18,000,000
£.	27,145,000

TAXES.

		£.
Wine, 20l. per ton		500,000
Spirits, Britiſh	£. 108,000	
———Scotch	15,000	
———Foreign	136,000	
		259,000
Tea 7½ per cent. on ſale	180,000	
Coffee and cocoa 6½d. per pound	40,000	
		220,000
Inſurances on ſhips, goods, &c. 2s. 6d. per cent.	130,000	
Inſurance on lives 1-tenth of premium	30,000	
		160,000
Licences to wear hair powder one guinea each		210,000
Cuſtoms Sundries	77,000	
Ditto deals and firs	111,000	
		188,000
Stamps		68,000
Limitation of franking		40,000
£.		1,645,000

Mr. Pitt concluded a long ſpeech, by expatiating on the reſources of the country at large, the juſtice and neceſſity of the preſent war, and the conſequent neceſſity of proſecuting it with perſeverance and vigour, as the only means of procuring a ſolid and laſting peace.

The principal obſervations on Mr. Pitt's ſpeech aroſe from Mr. Fox, who conſidered the facility with which the emperor had acceded to the hard terms of the loan, as a proof that it muſt be ultimately paid by this country. He approved, in general, of the taxes; objecting principally to the tax on the wearing of hair powder, which he conſidered as depending too much on caprice and faſhion to be depended upon as permanently productive. With reſpect to the reſources of the country, he had in moſt points the happineſs to agree with the right hon. gentleman as to their magnitude; but he warned him not to conſider them as inexhauſtible. Every new ſtreſs tended to accelerate that period when no more was to be expected. —In the preſent war, though but in the third year of it, a ſum of 48 millions was actually added to the national debt: the taxes propoſed would add between 16 and 17,000,000 pounds to the annual burden of the people.—Let the houſe reflect what an addition this muſt be to the overloaded people; let them conſider the poſſible effect of repeating this or greater burthens, for one, two, or three years, which, ſhould the preſent unfortunate war ſo long continue, would become neceſſary. The reflection was awful, and operated more ſtrongly than all the arguments he had before urged in favour of the neceſſity of taking the ſpeedieſt and moſt effectual ſteps to bring about the much wiſhed-for bleſſings of peace.

The different reſolutions were then propoſed by Mr. Pitt, and agreed to by the committee *nem. con.*

On Thurſday, Feb. 26, Mr. Wilberforce, after reminding the houſe of the reſolution to which they had agreed, May 1, 1792 (namely, That the ſlave trade ſhould ceaſe and determine from and after the 1ſt of Jan. 1796) entered into a recapitulation of the arguments which he had then uſed on that ſubject. He added, that by the reports of the Sierra Leone company, it appeared, that wars were expreſsly entered into in the interior as well as the coaſt of Africa, for the ſole purpoſe of ſelling the priſoners as ſlaves; and the cuſtom of murdering priſoners, which had been alledged in favour of the trade, appeared now to riſe ſolely from the object of the wars. Making war for ſlaves, they put to death all thoſe who from age or infirmity were not ſaleable. The fact, therefore, inſtead of juſtifying the trade, became from this explanation an irreſiſtible argument for its abolition. It had been ſaid, alſo, that the negroes were incapable of civilization; but this company, by penetrating into the interior of Africa, had diſcovered natives in a ſtate of refinement conſiderably advanced, regular towns and governments, beaſts of burden were in uſe, with many other arts and conveniences. Even ſchools for children were eſtabliſhed. He concluded by moving for leave to bring in a bill to aboliſh the ſlave trade, after a time to be limited.

This motion was oppoſed by the advocates of the ſlave trade, on grounds that had been repeatedly urged before; but Mr. Fox, who likewiſe repeated his former arguments in ſupport of the abolition, now contended for the policy of an immediate and total abolition of a trade, which was continually ſupplying our colonies with combuſtible matter, it being very well known, that the greateſt danger was to be apprehended from the newly imported negroes. But were the meaſure even contrary to policy, that ſhould not, in a legiſlative aſſembly, ſuperſede the paramount principles of morality and juſtice; and it was no argument to ſay, that if we gave up this trade, others would continue it; for the ſame reaſoning would juſtify our ſupplying cannibals with human food.

Mr. Wilberforce's motion was put, and negatived by 78 to 61: after which the motion, to defer the conſideration of the bill for ſix months, was put and carried.

[To be continued.]

FROM THE LONDON GAZETTES.

The London Gazette, February 28.

Horſe-Guards, Feb. 28.

A Diſpatch, dated Rheine, Feb. 11, 1795, of which the following is an extract, has been received by his royal highneſs the duke of York, from lieutenant-general Harcourt, and communicated by his royal highneſs, to the right hon. Henry Dundas, one of his majeſty's principal ſecretaries of ſtate.

I had the honour to inform your royal highneſs, in a letter dated Jan. 21, from Deventer, of the arrival of the troops in their cantonments behind the Yſſel. The froſt having precluded all communication with England ſince that time, it has been out of my power to acquaint you of the movements which have ſince taken place, and it is only within theſe two or three days that the thaw again offers a proſpect of its being open.

In conſequence of the arrangements made in conjunction with, and in purſuance of, general Walmoden's orders, to place the army in cantonments behind the Ems, we marched on the 27th of January from Deventer, and the reſt of the cantonments on the Yſſel, leaving lieutenant-general Abercromby with the guards, and colonel Strutt's brigade, the advanced poſts ſtill remaining at Appledorn, Low, &c. to take the neceſſary ſteps for the removal of the ſick, ſtores, and proviſions, and for the deſtruction of whatever of the latter could not be conveyed. Lieut. gen. Abercromby was to march the next day; and I am happy to ſay, that by the exertions which were made, and principally by thoſe of lieutenant-colonel Brownrigg, which on this, as well as on all other occaſions, have been of the moſt eſſential ſervice, the number of ſick left at Deventer, Zwell, and Zutphen, did not exceed 600, moſt of whoſe caſes would not admit of removal; major M'Murdo, with a captain, two ſubalterns, and the neceſſary medical attendants, was left in charge of them. The greateſt part of the ſtores and proviſions were removed or deſtroyed. The ammunition, which had been brought from Arnheim to Doeſburg, has likewiſe, in great part, been got off, and is now at Bentheim.

The firſt column arrived at and near Halten on the 27th, marched from thence to Delden on the 28th; and proceeded on on the 29th to Oldenſaal. On the 30th they arrived at and near Bentheim, Gen. Coates' brigade had marched ſome days ſooner, and was then cantoned at Skuttorpe, Rheine, and other places, near and behind the Ems.

General Abercromby's corps arrived at Oldenſaal on the 30th and 31ſt, and the advanced poſts were withdrawn to this ſide of Deventer, and poſted at Delden, Almela, and other villages on that front.

I am ſorry to add that the troops on their march ſuffered conſiderably, not only from the badneſs of the roads and the inclemency of the weather, but likewiſe from the difficulty of procuring cover for the men.

The London Gazette, March 7.

Admiralty-Office, March 7.

Copy of a letter from Sir John Warren, Captain of his Majeſty's ſhip La Pomone, to Mr. Stephens, dated Cawſand-bay, March 2, 1795.

Sir,

I beg you will inform their lordſhips, that, in purſuance of their orders, I put to ſea on the 12th of February paſt, with the ſhips named in the margin *. The weather becoming thick, with freſh breezes and a heavy ſea, on the 14th, the Anſon carried away her main-top-maſt, which obliged me to heave-to; and, owing to her damages, I was under the neceſſity of bearing down the two following days, as ſhe had drifted conſiderably to leeward; and, being unable to repair her defects at ſea, I ordered captain Durham to proceed with all poſſible diſpatch to Plymouth.

On the 18th, having fallen in with three ſail of the enemy's tranſports, part of a convoy bound from Breſt, I hauled the wind, and endeavoured to make the land; and on the 21ſt, the light-houſe on iſle of Oleron, bearing SE by E. I diſcovered a frigate and twenty ſail of veſſels under convoy, cloſe in with the ſhore, many of them under American, Daniſh, and Swediſh colours. I purſued them half way up the Pertuis D'Antioche, in ſight of the Iſle of Aix; but the tide of flood ſetting ſtrong up, and the wind right in, I was obliged to tack, and captured and deſtroyed the veſſels in the incloſed liſt. I underſtand the frigate was La Nériade, of 36 guns, twelve pounders, with tranſports and other veſſels for wine and ſtores, to Rochfort and Bourdeaux, on account of the convention, for their fleet. On the 26th, the Iſle of Gron bearing eaſt, ſix leagues, I gave chace to ſix ſail of veſſels, in the N. W. At nine, A. M. captured the conventional ſchooner La Curieuſe, with five others. They were bound to Nantz from Breſt, with clothing for the army.

I am much indebted to the attention and activity of captains Keats and Martin, with their officers and men, upon this occaſion.

* La Pomone, Galatea, Anſon, Artois, and Duke of York lugger.

I arrived here this day, with the Galatea and Artois, and ſhall uſe every diſpatch in completing the ſhips for ſervice.

I have the honour to remain, &c.

J. B. WARREN.

[The following is a liſt of the veſſels taken by ſir J. B. Warren, from the 13th to the 26th of February, viz. ſloop La Petite Jean, with fiſh; La Peina brig, in ballaſt; Deux Freres brig, with ſundries; La Petite Magdalene ſloop, with coffee, ſugar, indigo, &c. La Packet Boutz de Cayenne brig, with ſugar, pepper, tea, &c. La Coureuſe ſchooner, eight braſs guns; La Liberté lugger, with 560 caſks of fiſh; La Glorie lugger; La Biche brig, with coffee, linen, rice, potaſh, &c. La Mantaiſe ſloop, with ſtores, and ſent them for England. Alſo the following tranſports: La Deſiree, La Margente, Trois Freres, La Guerrier, Le Debat de la Flotte, L'Eſpieuſe, La Liberté, and burnt them: La Graley, Jean Marie, La Peeta, and L'Anne, ſcuttled and ſunk. In all twenty-one veſſels.]

Copy of a letter from Captain George Burlton, of his Majeſty's ſhip Lively, to Mr. Stephens, dated Plymouth, March 4, 1795.

Having received orders from my lords commiſſioners of the admiralty to put myſelf under the command of captain Sterling, of his majeſty's ſhip Jaſon, I have the honour to acquaint you, for their lordſhips information, that I ſailed, in company with her, on the 27th of February, from Spithead, and that on the 1ſt of March, a hard gale of wind and thick weather from SSE ſeparated us. I uſed my utmoſt endeavours to gain the cruiſing ground, in order to join her again. At nine in the evening of the 2d inſt. Uſhant then bearing SE 13 leagues, I ſaw a ſail coming down upon me, which I ſoon perceived to be an armed veſſel, and gave her chace. At twelve o'clock, we took poſſeſſion of her; ſhe proves to be the L'Eſpion, of 18 ſix-pounders, and 140 men, five days from Breſt, on a cruiſe, in perfect good order, lately one of his majeſty's ſloops of war. I think ſhe is a very deſireable veſſel for the ſame purpoſe, as ſhe ſails well. As I have many priſoners on board, I hope their lordſhips will approve of my coming into the neareſt port to land them. With their permiſſion I ſhall leave her for the inſpection of the officers of the dock-yard at this port. I am, &c.

GEORGE BURLTON,

The London Gazette, March 10.

Horſe-guards, March 10. A diſpatch, dated Oſnabruck, Feb. 28, 1795, of which the following is an extract, has been received by his royal highneſs the duke of York, from the hon. lieutenant-general Harcourt, and communicated by his royal highneſs, to the right hon. Henry Dundas, one of his majeſty's principal ſecretaries of ſtate.

I loſe no time in acquainting your royal highneſs, that on the 24th inſtant, the enemy advanced in force upon the poſts of Nienhuys and Velthuys, which were under the command of lieutenant-colonel Strutt, and occupied by the loyal emigrants and a detachment of Rohan and Bouille's corps. Theſe troops, after the moſt gallant reſiſtance, were forced, with the loſs of about 100 killed and wounded, to fall back upon Nothorn, and the French occupied thoſe two poſts in ſome force. They alſo ſurpriſed a ſmall picquet of Salm and Hompeſch huſſars in Oldenſaul, which they occupied, but were repulſed, when advancing on this ſide of that place. Lieutenant-general Abercromby, who commanded at Bentheim, &c. intended to attack and re-occupy the poſts of Nienhuys and Velthuys. This meaſure was, however, rendered unneceſſary by the retreat of the French, who left all thoſe poſts on the 26th, directing their march toward Hardenberg, and lieutenant-colonel Strutt immediately re-occupied them.

The laſt reports we have received ſtate, that the enemy are precipitately marching their troops from Hardenberg and Groeninguen toward Zwall, and that they have even evacuated Covoerden, taking with them the ammunition, and part of the cannon from that place. It would be unjuſt in the extreme not to mention to your royal highneſs the particular gallantry and good conduct of the loyal emigrants; they have ſhown it in every inſtance, and particularly in this laſt, in which, I am ſorry to ſay, they have had four officers and above fifty men killed and wounded. Major M'Murdo, and the other officers left with the ſick, have been ſent back, and I am happy to add that from their reports, our ſick meet with the beſt treatment poſſible from the French.

Horſe-guards, March 10. A diſpatch, dated Embden, March 1, 1795, of which the following is an extract, has been received by his royal highneſs the duke of York, from major-general A. Gordon, and communicated by his royal highneſs to the right hon. Henry Dundas, one of his majeſty's principal ſecretaries of ſtate.

An opportunity for England offering this moment, and of which lieutenant-general Harcourt cannot avail himſelf, I have the honour to report, for the information of your royal highneſs, that the fore-poſts, under the command of major general lord Cathcart, extending from Fort Bourtange to Neicoe Shanks, were attacked and driven in, with ſome loſs, on the morning of the 27th.

I am informed by his lordſhip, that he was retiring by his left with his whole force, conſiſting of major-general David Dundas' brigade of cavalry, the 6th brigade of infantry, with ſome detachments of foreign light troops, and intended re-croſſing the river Ems at Rhude and Meppen.

I alſo underſtand that the fore-poſts of the left wing were driven in ſome days before, but I have not been able to learn any particulars.

The London Gazette, March 17.

Admiralty-Office, March 17.

Copy of a letter from Captain Burlton, commanding his Majeſty's ſhip Lively, to Mr. Nepean, dated the 13th inſtant, Uſhant ſouth, half weſt, 13 leagues.

Sir,

I beg you will acquaint the lords commiſſioners of the admiralty, that, half an hour paſt ten o'clock this morning, I brought the French frigate La Tourterille, of thirty guns and 250 men, to action; and, at half paſt one o'clock, I had the ſatisfaction to ſee her ſurrender to his majeſty's ſhip Lively, under my command. Our loſs is very trifling for ſo long an action, only two men wounded. The enemy's loſs is ſixteen killed, and twenty-five wounded. I am ſorry to ſay I fear Mr. Loftus Otway Bland, the third lieutenant, is likely to loſe his left eye, and the ſervice thereby deprived of a deſerving young officer.

I beg leave to recommend to their lordſhips notice lieutenants Joſeph R. Watſon and John Maitland, whoſe ſpirited and ſteady example encouraged the men to do their duty with pleaſure.

Mr. James Vetre, the maſter, is entitled to my warmeſt thanks, for the great aſſiſtance he gave me during the fight. Indeed I cannot conclude without obſerving the officers and crew throughout behaved with that determined coolneſs and bravery that muſt have enſured them ſucceſs. I have the honour to be, &c.

GEORGE BURLTON.

The London Gazette, March 21.

Horſe-guards, March 21. A letter from major-general ſir Adam Williamſon, K. B. dated Jamaica, Jan. 12, of which the following is an extract, has been received by the right hon. Henry Dundas, one of his majeſty's principal ſecretaries of ſtate.

'I am concerned to have to report to you the capture of Tiburoon. I incloſe a copy of lieutenant Bradford's letter, who commanded. I have every reaſon to be perfectly ſatisfied with the conduct of the garriſon: their ſituation was ſuch that they could not poſſibly do more.

'M. Du Pleſſis, the lieutenant-colonel, and two other officers of the ſouth legion, were killed. M. Du Pleſſis is a very great loſs to the ſervice.

'Lieutenant Baſkerville, of the 13th regiment, who had been badly wounded in a former attack, was the only Britiſh officer who loſt his life on this occaſion.'

Cape Donna Maria, Dec. 30.

Sir,

As in caſes of this nature matters are very likely to be miſrepreſented, I take this opportunity (thinking it my duty) to inform you of the real ſtate of the garriſon of Tiburoon before its evacuation.

We, to the amount of 450 men, counting the army of Jean Kina, were attacked the 25th, at day-light, by the enemy from Aux Cayes, with three armed veſſels. Their attention, at firſt, was chiefly taken up by the King Grey, who defended the harbour with much ſpirit; but their artillery being landed, and brought to bear from an eminence, to the amount of one eighteen pounder, one nine, two pieces of four, and one of two, after forty-eight hours cannonading, attended with a 50 lb. ſhell from an eight-inch mortar, about every ten minutes, night and day, at length pierced the King Grey ſo frequently, that ſhe lowered ſo many feet in the water as to render her battery uſeleſs, and a red-hot ſhot taking the magazine, ſhe blew up.

They then turned their fire on our lower battery, and very ſoon diſmounted two eighteen pounders, the other being burſt.

Finding it ſilenced, they then attacked the great fort more vigorouſly than the former days, bringing all their cannon to bear on it, with heavy muſketry. They killed and wounded upward of 100 men, every ſhell latterly falling inſide the fort, all our cannoniers being diſabled.

A ſhell falling in the ditch where we had placed ſome of Jean Kina's corps, they forced the draw-bridge, and flew to-

ward Jeremie road. We then rallied, and forming a rear and advanced guard, putting our wounded in the center, retreated in as much order as the caſe admitted of; and forcing an ambuſcade of the enemy at Irois, are now endeavouring to put ourſelves under the command of lieutenant-colonel Handfield, at Jeremie.

We evacuated the fort the 29th, about two o'clock in the afternoon. I beg leave to recommend to your attention the conduct of monſ. De Savre, major de Place, which really proves the juſtice of the general opinion of his zeal and bravery; alſo that of monſ. D'Anglade, of the legion of the ſouth, and monſ. de Breuil, commanding the gunners.

The conduct of the troops in general was perfectly what you would have wiſhed, that of Jean Kina's army, until panic-ſtruck by the ſhells, was admirable.

The number of the enemy was ſuppoſed to be about 3000; 800 of which were troops of the line, including artillery.

I have the honour to be, &c.

GEORGE BRADFORD, lieut. 23d reg.

To his excellency major-general Williamſon.

AFFAIRS OF FRANCE,

Continued from Page 139.

ON the 4th of February, the convention went into the diſcuſſion of a plan of a decree, in the name of the committee of public ſafety, for ſending repreſentatives of the people to the colonies ſituated beyond the Cape of Good Hope

This led Gouly to expatiate on the cauſes by which England had obtained her acknowledged ſuperiority at ſea:

'Citizens' ſaid he, 'every ſtep of our armies has been marked by victory. We have ſhewn the ſame courage upon the ocean, but could not obtain the ſame ſucceſs. The empire of the ſea has remained to the moſt *perfidious* of nations: but the day is not far diſtant, when the braveſt and the moſt generous will drive before it the uſurper of its rights. Far be from us a vain puſillanimity, which would make us diſguiſe the truth. In doing ſo, we ſhould ſeem to doubt the energy of French republicans. Let us not be afraid to confeſs, that our poſſeſſions in Aſia have fallen a prey to the Engliſh. We need not fear to diſcloſe our misfortunes, when we are enabled to repair them. We cannot, indeed, yet make the neceſſary efforts for that purpoſe. The ſpirit of liberty is compoſed of boldneſs and of wiſdom. It expoſes itſelf to danger, equally when it dares too much, as when it dares too little. Let us now caſt our eyes a little nearer home. France has loſt the Mediterranean by treaſon and incapacity. It muſt be reconquered. We muſt create again our marine; open again, by the trade of the Levant, thoſe channels of wealth which have been too long obſtructed, inſuring thereby the proviſioning of the ſouth, and eſtabliſhing a free communication with Conſtantinople. We muſt proteſt our commerce, repreſs the tyranny of England, and ſuccour our colonies in the two worlds. Hitherto we have done more for our glory than our opulence. The greedy policy of England has calculated differently: ſhe enriches herſelf at the expence of her renown, and her gold conſoles her for her diſhonour, England has too long been deſcribed to us as exhauſted: the reſources which ſhe draws from the Eaſt Indies are immenſe. So great are the returns which are made to her from her poſſeſſions in that quarter of the world, that the Engliſh company is not ſufficient to tranſport them. It is a fact, worthy of attention, and which hiſtory atteſts, that the nations which have by turns ruled in Hindooſtan, have been the moſt opulent in the univerſe. This fruitful ſoil renews, at every inſtant, its treaſures; and time has not yet exhauſted it, under all the revolutions of nature and of empires. It is Aſia which nurſes the pride and opulence of the tyrants of the ſeas. It is there, then, that they muſt be attacked; it is in this centre of their riches and of their maritime power, that they muſt feel the ſhock of our republican energy. No peace with England, until we ſhall have deſtroyed the empire which ſhe uſurps over the ſea. This is the wiſh of every Frenchman; but it muſt be accompliſhed upon the ruins of the Britiſh commerce in India. As long as ſhe retains it, ſhe will poſſeſs the means of dividing us within, and of raiſing up enemies to us from without. The indignation which Engliſh deſpotiſm has inſpired in the breaſt of every prince in India; the old and juſt animoſity of Tippoo Sultan, which the impotence of our ancient government too feebly ſeconded; in a word, the cruelties which have been committed by the miniſters of George in thoſe fertile

countries, every thing insures to us, against England, faithful and zealous allies; and humanity, which, from the coasts of Malabar and Coramandel, has so long raised its voice, in vain, against the crimes of Hastings and his accomplices, waits until we carry to it, at once, consolation and vengeance But here a great question appears: Is it consistent with the interests of the French nation to retain possessions in Asia? I answer, without hesitation, no; if the English were expelled from it for ever; if the commerce of it was left open to us in common with all other European nations. But as long as it remains under the absolute dominion of an ambitious and hostile people, as long as that people find there the means of harassing and dividing us, so long our interest demands that we should attempt to share in those possessions, and not, through a false policy, to continue tributary to our most powerful and ferocious enemy.

'We do not propose to you, to precipitate the execution of this project, but to prepare the means which are to ensure its success. India is not lost to the republic as long as she remains in possession of the Isle of France and La Re-union, the Gibraltar of Asia. England knows their importance, and will attempt the conquest of them. Citizen colleagues, many circumstances ought to fix your serious attention upon the political and topographical situation of these and the adjacent islands. The decree of the 16th Pluviose, respecting the liberty of the negroes, may have raised some discontents, excited some troubles, and raised some hopes in the perfidious English, of succeeding in their attempts against those colonies, of butchering the patriots, and seizing their properties, as they have done at St. Domingo.

The first effects of this decree must already have taken place, but let us endeavour to prevent the new troubles which it may occasion. The more those colonies are important, the more active should be your exertions; and for that purpose, you must transmit to them force both physical and moral. The courage of the patriots must be revived, and they must be secured against attack from without, and civil war within. Representatives of the people sent there will foster the public spirit, will repels enemies of every kind, and will regulate upon republican principles the different parts of the administration, until the national convention shall have finally decided upon the organization which is fitted to the colonies; in short, they will constitute the moral force from which every thing is to be expected, but without which you expose yourself to lose every thing. Their presence alone can restore tranquillity to the minds of the colonists, so much agitated and alarmed.—The representatives of the people, in securing to them internal peace and union, will secure to you at the same time the alliance and the co-operation of Tippoo Sultan, and the other Asiatic powers, whom it is our interest to attach to us. They will save the Isles of France and La Re-union from an invasion, or from a total revolution and subversion. If you neglect any of those measures, you sacrifice two superb colonies, you give up to the English an incalculable quantity of raw materials, so essential at the present moment, for reviving your manufactures, and restoring your national commerce; you abandon to them our frigates, our privateers, and our merchant ships, which cover those seas; you restore to them the innumerable prizes which have been taken from them by our brave brethren of the Isle of France; you insure to them the empire of the seas beyond the Cape of Good Hope; and you prolong the war of tyranny against the liberty of mankind. —General plans ought not to hinder a great nation from executing particular ones; but surely the most urgent is to save the Isle of France. The English watch the moment of wresting it from our hands. This sordid people, who already draw 360,000,000 livres annually from their possessions in India, are desirous of augmenting their revenue by the conquest of the Isle of France, and of the Dutch colonies. If we lose the Isle of France, we lose at the same time La Re-union and Madagascar, the last of which unites the commerce of cotton, indigo, silk and spices, and furnishes in abandance, timber for the construction of ships of every kind; in short, if we lose the Isle of France, the increase which we afford to the riches of our enemies is incalculable, and we are for ever, as a nation, exiled from Asia.

'From the Isle of France we may be said to command the whole establishments of the Europeans in Hindoostan. From this point we shall one day be enabled with facility to retake our own possessions, as well as those of the Dutch, and to drive ignominiously from both, the English who now possess them. Without this point we never can; for to talk of conquering at a distance of 5000 leagues, without a port to refit or recruit in, is madness and folly.

'Representatives of the French people, these reflections merit your most serious consideration. Save the isle of France;

there is not a moment to be loſt; but in order to ſave it, you muſt ſend repreſentatives of the people; men, firm, honeſt, and conciliating, and who have with that country no relation of any kind, either of family or of intereſt. I conclude by ſupporting the decree which has been propoſed to you.'

Dubouchet ſaid, 'I oppoſe the ſending of repreſentatives to the colonies, becauſe, either you muſt give them a great and ſufficient force, and thereby rob your navy of that which is neceſſary for other important expeditions, or you muſt give them a force not ſufficient, and thereby render the expedition uſeleſs, and even hurtful.'

Craſſous was of opinion that it would be dangerous to ſend repreſentatives of the people to the colonies. 'Remember', ſaid he, 'the abuſes which have reſulted from the ſending of petty tyrants, to whom deſpotiſm committed the taſk of defending the colonies. The law of the 16th Pluvioſe (declaring the negroes free) has given a mortal ſtab to England. It will make its way into their colonies, and their ſlaves will wiſh to become free and Frenchmen. *(applauſe)* As to Cayenne, this decree is already known there, and has had the moſt ſalutary effects. The ſlaves and their former maſters labour together, and each has his ſhare of the profit. *(applauſe)* Since it was proclaimed in Guadaloupe, we have ſeen the blacks rally with the patriots, for the purpoſe of expelling the Engliſh and the emigrants.'

'We muſt make, ſaid Serres, 'a diſtinction between the Weſt India iſlands and the colonies beyond the Cape of Good Hope: it is to theſe colonies only that it is propoſed to ſend repreſentatives. The colonies of the Iſle of France are, in general, peopled with ſailors and mechanics, a reſpectable and uſeful claſs of men, but not rich, and who would experience immenſe loſs if this decree were executed. It is neceſſary, therefore, to ſend a functionary, with powers ſufficient to indemnify them. Whether that functionary be a repreſentative of the people, or a ſimple civil commiſſary, is of little importance.'

The diſcuſſion was adjourned until the 14th, on which day it was decided that members of the convention ſhall be ſent as commiſſioners to the Eaſt and the Weſt Indies.

[To be continued.]

CORRESPONDENCE.

Letter from the King of Poland to the Britiſh Envoy at Wartaw, S. Gardiner, Eſq.

Grodno, Jan. 26, 1795.

THE part you have acted near my perſon, which is verging toward the grave, and no hope being left of ever ſeeing you again, there remains for me at leaſt one important concern, from the very bottom of my ſoul to bid you eternal farewel. To the laſt moment of my life, I ſhall bear you in my heart; and, I hope, we ſhall meet again in a place where honeſt minds and righteous ſouls will be united for ever. All that belongs to the etiquette of courts has been ſo much deranged by my unfortunate fate, that probably neither I nor you will be able to obſerve its uſual forms. But my heart ſhall ever remain true. I love and revere your king, and your nation. You will be ſo good as to inform them of it. Ever ſhall it remain a certain truth, that I wiſh you to preſerve your affection for your friend. Unable to converſe with you myſelf, my picture muſt ſupply its place.

(Signed)

'STANISLAUS AUGUSTUS REX.'

Anſwer from Mr. Gardiner, the Britiſh Envoy, to his Poliſh Majeſty.

SIRE,

'The letter which your majeſty did me the honour of writing to me from Grodno, and which I received yeſterday, has moved me to tears, and will conſtantly cauſe emotions within me, whenever I ſhall think on it. I moſt gratefully thank your majeſty for the miniature you did me the honour to ſend to me. It is doubly dear to me for coming from your hands, and from preſenting me with the idea of your perſon. The image of your majeſty, the excellence of your character, your diſtinguiſhed kindneſs toward me, and your misfortunes, ſhall always be engraven in my heart, and never be effaced from my mind. May juſt heaven in future grant to your majeſty the fate which your virtues deſerve; and may he reſtore that calm within your ſoul, which is ſo neceſſary, after ſo many ſtorms. I ſhall always pray for the welfare of your majeſty, and I intreat your majeſty, occaſionally, to think on a perſon, who always felt the moſt profound reſpect, and the moſt perfect eſteem for your majeſty.—Pleaſe to accept of the aſſurance of my true ſubmiſſion to your future commands. I have the honour to be, ſire, &c. GARDINER.

HISTORICAL CHRONICLE.

FEBRUARY 26.

ON Saturday, at the Old Bailey, Edward Barret was convicted of wilful and corrupt perjury. *See Vol. XCV, page 229.*

Nineteen prisoners were ordered to be transported beyond the seas for the term of seven years, twelve to be imprisoned in Newgate, three to be publicly whipped, one to be fined one shilling and discharged, and five discharged by proclamation.

The sessions being then ended, the same were adjourned until the 13th of April next.

FEBRUARY 28.

Major Byng, of the 93d regiment, and the brother of Mr. Byng, the member for Middlesex, was lately unfortunately killed at Guernsey, in a duel with the surgeon of the same regiment.

The Gazette of this evening contains a proclamation, offering a reward of 200l. for the apprehension of T. Crossfield, surgeon, late of Dyers-buildings, Holborn, charged with suspicion of high treason.

MARCH 2.

This day came on to be tried at Guildhall, before lord Kenyon and a special jury, an action for false imprisonment, brought by Mr. James Croome, auctioneer, against Paul le Mesurier, esq. late lord-mayor,

Mr. Erskine opened the case for the plaintiff. Among other observations, he stated that the law had wisely provided, on the one hand, for the liberty of the subject, and, on the other, for the dignity and security of magistrates. It frequently happened, that the subject brought before the magistrate, involved a question of law, and that gentlemen who were called to the exercise of that office, might frequently find themselves involved in difficulties from defect in their education. The constitution did not forget that circumstance; and, therefore, if, from any informality, where the mind was not at all biassed, the liberty of the subject were invaded by any mistake of the first magistrate of the city of London, he had an opportunity of tendering amends, by leaving it to a jury to say, whether he had tendered a sufficient compensation for the trespass or the mistake he had committed.

The late lord-mayor, who was the defendant in this action, came there on the plea of not guilty, without having tendered any thing. He conceived it would have been more becoming the dignity of the chief magistrate of the city, before he came there, to tend an amends, the extent of which, the jury, on their oaths, would have decided.

Mr. Croome, he understood, some days before this imprisonment, published a hand-bill, in these words: 'A meeting will be held at Founder's-hall, Lothbury, on Friday the 22d of August 1794, at five in the afternoon, to take into consideration the appealing against the London Militia Act.'

That act was not universally approved. Whether it were a good or a bad measure, he knew not; and the jury had no jurisdiction over the question. It was sufficient for him to say, that it was the privilege of every subject of this country, to convene any of the inhabitants of the place in which he lived, proceeding in a manner that was decent and proper, to appeal against any act where the law gave an appeal, or if those who chose to assemble, conceived it a real grievance. If persons assembled in a tumultuous manner, the law would arrest them. If they were guilty of a breach of the peace, the law would punish them. Magistrates had an opportunity, by the rules of law, to interfere.

In consequence of that advertisement, the late lord-mayor sent one of his city-marshals to the house of the plaintiff, to desire him to come to the mansion-house: Mr. Croome received the officer with propriety, and told him, he would wait upon his lordship. When he appeared, the lord-mayor asked him, whether he knew any thing about the hand-bill that had been stated, and other hand-bills, which were then produced. Mr. Croome answered, that he had directed the hand-bills (invoking the meeting at Founder's-hall) to be printed. He could not tell him who the persons were that might assemble. There was no violence—no riot. His lordship was pleased to say, 'If you cannot tell me who those people are, and where they live, and who printed the hand-bills, I'll give you a night's lodging in the compter.' The plaintiff said, 'I have neither offended your lordship, nor violated the laws. Have not the citizens of London a right to meet when and where they please, to consider what is proper for them?—' That,' replied the lord-mayor, 'is the question,' and, accordingly, he

determined the queſtion himſelf, and without even a warrant, upon which the plaintiff could have been brought up on a habeas corpus. Neglecting all the forms of law, as well as violating its ſubſtance, he ſends this citizen to the common gaol, where he remained a whole night; after which he was again brought before his lordſhip, and diſcharged.

After ſome further obſervations from Mr. Erſkine, on the importance of protecting the liberty of the ſubject, the examination of the witneſſes commenced; in the courſe of which it appeared, that this meeting took place about the time that there were dangerous riots in the city reſpecting the crimps and kidnappers; and that three very inflammatory hand-bills were circulated at the meeting at Founder's-hall, and produced at the examination of Mr. Croome before the lord-mayor.

Mr. Mingay roſe in behalf of Mr. Le Meſurier, and reprobated the conduct of Mr. Croome in the moſt ſevere terms. 'The duties of a magiſtrate,' he ſaid, 'were not very eaſy to be executed, even in the moſt peaceable times, and they were infinitely more difficult when the opinions of men were much agitated. The liberty of the ſubject ought to be the object of all; but if the lord-mayor had not done what he did, he would have been unworthy of the ſtation he held. Suppoſe he had left Mr. Croome, and other ſuch people, looſe, to hold the meeting at Founder's-hall, could any man ſay what might have been the conſequence? If the people had once been aſſembled for one purpoſe, might not their minds be eaſily inflamed, and prepared by ſuch hand-bills as had been read for a very different purpoſe? A mob was much more eaſily collected than diſperſed.' The lord-mayor recollecting that only two days before moſt ſerious riots had taken place in Shoe-lane and Holborn, conceived it his bounden duty, as the firſt magiſtrate, to whom the peace of the city was entruſted, to prevent, if poſſible, any more ſuch meetings. His learned friend, who had opened this caſe, had no idea of the three very inflammatory hand-bills which had been read. Though he was the zealous advocate of freedom, he was no advocate of licentiouſneſs. What had theſe hand-bills to do with the militia act? He did not ſay that they had not a right to aſſemble, to petition parliament againſt any ſuppoſed grievance; but this was all a pretext. He thought the lord-mayor, inſtead of deſerving cenſure for what he had done, deſerved praiſe. He attended to the importance of his duty at the moment: he meant to act fairly and honourably, and to do that which was to be of ſervice to the public. He ſubmitted to the jury, that the lord-mayor was entitled to their verdict; but if he could not have their verdict in ſtrictneſs of law, he was certain they would think the ſmalleſt coin in the kingdom would anſwer the juſtice of the caſe.

Lord Kenyon ſaid, 'I think there is not here a defence, in point of law, to entitle the defendant to your verdict. The commitment of the party ought to have been by a written warrant, and not by a parole order; and, therefore, you muſt give your verdict for the plaintiff. But it is for you, by your verdict, to declare to the public your opinion of this cauſe: though not ſtrictly legal, yet, perhaps, you may ſee the propriety of the conduct of the magiſtrate on that occaſion. The hiſtory of this country affords many inſtances where a party, who, though he has not acted ſtrictly conformable to law, may not only not deſerve puniſhment, but may have merit with the public. On many occaſions the miniſters of this country have ordered things to be done for which they have received the applauſe of all the world, and yet, not being ſtrictly agreeable to law, parliament has paſſed an act of indemnity.

'If you think the defendant, when he impriſoned the plaintiff, was wantonly ſporting with the liberty of a fellow-ſubject, you will ſhew your indignation by the damages you give; but if you think, that, though he tranſgreſſed the ſtrict line of the law, he was only anxious to preſerve the public peace in difficult times, and was doing all he could for the benefit of the public, you will mark your opinion, perhaps, by giving the plaintiff the loweſt coin in the kingdom.'

Verdict for the plaintiff — Damages, ONE FARTHING, which carries coſts.

MARCH 4.

An account has been received, that a ſmall French privateer landed its crew near Seaton Delaval, the ſeat of lord Delaval, which they plundered, and carried off every thing moveable they found in the houſe, before the people of the neighbouring country were aſſembled in ſufficient numbers to oppoſe them.

MARCH 5.

Richard Brothers, whoſe prophecies have lately made much noiſe, was taken into cuſtody yeſterday morning at his lodgings

in Paddington-ſtreet, under virtue of a warrant from the duke of Portland, grounded on the 15th of Eliſabeth, wherein he ſtands charged with unlawfully, maliciouſly, and wickedly writing, printing, and publiſhing various fantaſtical prophecies, with intent to create diſſenſions and other diſturbances within this realm, and other of the king's dominions, contrary to the ſtatute, &c.

Meſſrs. Higgins and Roſs, two of the ſecretary of ſtate's meſſengers, with Rivet, and another of the Bow-ſtreet officers, were the perſons who put the warrant in execution. On informing Brothers of their buſineſs, he inſiſted on ſeeing their authority, which being ſhewn, he deſired them to make his compliments to the duke of Portland, and inform his grace that he certainly ſhould not wait on him; nor was it without ſome force that they could get poſſeſſion of his papers; when he got to the ſtreet door, being at laſt convinced he muſt ſubmit, he declared he would not go into the coach unleſs obliged, as then his prophecy would be fulfilled; and when ſeated in the coach, he exclaimed with great energy, 'Now my prophecy is fulfilled;' after which he was ſilent and ſubmiſſive.

He was conveyed to the ſecretary of ſtate's office, but did not undergo any examination, the preſence of the lord chancellor being thought neceſſary. He continued in the cuſtody of Mr. Roſs at his houſe in Crown-ſtreet.

This extraordinary perſon calls himſelf the nephew of God, the man who is to be revealed to the Jews as their prince and deliverer, and he propheçies the deſtruction of all ſovereigns, and of the naval power of Great Britain, by the year 1798, &c.

MARCH 7.

Mr. Brothers was yeſterday brought up before the privy-council, and underwent a long examination, few particulars of which have tranſpired, as none of his friends have been admitted to viſit him. All that we know is, that he comported himſelf with great dignity and coolneſs, perſiſting in the divinity of his legation; and maintaining, that he held an immediate communication with God, as aſſerted in his writings.

With great earneſtneſs, he exhorted the miniſters to be admoniſhed by his predictions, and employ the interval that was allowed them in endeavouring to avert the Divine Vengeance with which the Almighty threatened them, and from which they were hitherto preſerved at his earneſt interceſſion.

He alſo warned them of the neceſſity of conveying theſe admonitions to the royal family, for whom he profeſſed a great regard and attachment, particularly for his majeſty; and declared, that he ſtill retained the ſame affection for the king which he bore him when he was a lieutenant in the royal navy.

It ſeems, that the privy council, notwithſtanding the extraordinary compoſure and firmneſs of the prophet, conſider him as a lunatic, on which account the attendance of the lord chancellor, by law the guardian of lunatics, was particularly required on his examination.

When the interrogatories were ended, Mr. Brothers was ſent back under the care of Mr. Roſs, the meſſenger.

MARCH 8.

On Tueſday came on, at Guildhall, the election of a repreſentative in parliament for the city of London, when the candidates were Mr. alderman Coombe, Mr. alderman Pickett, and William Luſhington, eſq. The ſhow of hands was declared to be in favour of the latter; but a poll was demanded for Mr. Coombe, the conteſt being declined by Mr. Pickett. At the cloſe of the poll on Thurſday, the numbers were, for Mr. Coombe 1560; Mr. Luſhington 2334.

On which Mr. Coombe ſent a letter to Mr. Luſhington's committee, informing them, that he declined any further conteſt.

MARCH 9.

Sir Frederic Eden ſet out on Friday, from town, to embark for Breſt in a cartel, with a ſpecial commiſſion for the exchange of priſoners.

MARCH 10.

The principal proprietors and farmers in the middle and ſouth levels of the fens, met the earl of Hardwicke, at the White Hart in Ely, yeſterday fortnight, to conſider of the preſent calamitous ſituation of the country from the late inundations, and reſolved to apply to parliament for relief. Five hundred thouſand pounds, it is ſaid, will not compenſate the loſs.

MARCH 11.

One of the firſt convicts ſent to Botany Bay, has returned in a ſhip laden with ſugar, on board of which he went from that place to Bengal. He is thoroughly reformed, and acted as captain's ſteward during the voyage, the period for which he was tranſported being expired. He is ſo much attached to Botany Bay, that he

prefers living there to reſiding in this country, and intends to return. He ſays cattle are particularly wanting in that ſettlement; but as to proviſions in general, there is no ſcarcity.

MARCH 12.

The following is the duty on hops paid in 1794.

Kent - - -	£	89,725	16 6
Suſſex - - -		29,416	0 9
Worceſter, Hereford, and Wolverhampton -		40,210	15 0
Farnham - -		11,212	0 1
Eſſex and Suffolk -		4,711	12 0
North Clay - -		3,712	15 0
Sundry ſmall collections -		2,207	8 0
	£	190,196	7 4

MARCH 13.

A general court of proprietors was held at the Eaſt India houſe, when it was ſtated to the meeting by the chairman, that at the ſuggeſtion of Mr. Dundas, the court of directors had reſolved to raiſe 3000 ſeamen, in lieu of the three regiments of infantry voted to government by the proprietors on the 23d of October laſt. This was formed into a motion; which, with an addition, in conſequence of an idea ſtarted by Mr. Twining, paſſed unanimouſly, after a ſhort debate.

Portſmouth, March 16. This day the court martial on lieutenant Skill, and the boatſwain, of the Terror bomb, for confining captain Luke, of the ſaid ſhip, and taking the command from him, was concluded; and the lieutenant is diſmiſſed the ſervice, and rendered incapable of ever ſerving again. The boatſwain was acquitted.

MARCH 21.

The firſt payment of the immenſe St. Jago prize is commenced; captain ſir A. Douglas, has received his ſhare; the following is the declared proportion of ſpecie only,

Each Captain's ſhare -	£	13,920
Lieutenant - -		910
Warrant-officer -		612
Petty-officer - -		140
Foremaſt-man - -		26

Beſide two ſeventh ſhares of the whole, in reſerve, till the deciſion whether the Boyne and Powerful have a right to ſhare with the ſquadron. The above is alſo independent of the valuable cargo and bullion, which are yet to be ſhared. The admiral's ſhares are not yet declared.

MARCH 23.

On Friday, Meſſrs. Parkins, Hazard, and co. Richardſon, and co. Branſcombe and Biſh, Gallev and Beardmore, Nicholſon, Johnſon, Wright, Banniſter, and Cooper, lottery-office-keepers and dealers in tickets, contracted for the enſuing Engliſh lottery, at the rate of 15l. 3s. 5d. per ticket, on a lottery of 50,000 tickets, the amount of prizes to be 500,000l. which leaves a clear gain of 258,541l. 13s. 4d. to government, beſide the intereſt of the money for a conſiderable time. The other competitors were meſſ. Granville, 15l. 2s. 9d. Towgood, 14l. 15s. Boyd and co. 14l. 11s. 7½. Levien, 14l. 7s. 6d. Cope, 14l. 4s. 2d. Morgan, 13l. 5s.

MARCH 25.

Yeſterday a letter was received at the General Poſt-office, dated Yarmouth, March 22, which ſtates, that the Prince of Orange, Capt. Bridge, had arrived there the preceding evening. Captain Bridge ſpoke with the Argus revenue cutter, and was informed that the King George packet, capt. Deane, had been taken by four French frigates. She ſailed from Cuxhaven the 14th inſt. with the firſt mail on board for that place, and had the anſwers to nine or ten different mails which were ſent hence after the interruption with Holland, and it is ſuppoſed had remittances on board for above half a million of money.

MARCH 26.

The emperor of Morocco has declared war againſt the Americans, and has ordered his cruiſers againſt them.

IRELAND.

THE ſeſſions of the parliament of Ireland, it has been ſeen (*Page* 136) was opened with unexampled unanimity. On the 24th of January, Mr. Grattan preſented petitions from the Roman catholic inhabitants of ſeveral counties, cities and towns, praying for a total repeal of the penal and reſtrictive laws now affecting the catholics of Ireland. The catholics, it was underſtood, had received every encouragement to expect that their claims would be granted; and the country, in general, expected, that ſome unpopular bills (ſuch as the convention bill, and the police bill) would be repealed; eſpecially as ſeveral members of the late adminiſtration (known by the name of the Beresford Intereſt) had been diſmiſſed, and their ſituations filled by Mr. Grattan, and other popular men, at the head of what was called the Ponſonby Intereſt. Such, moreover, was the loyalty, and the zeal to expreſs their unanimity, that a vote of 200,000l. for the defence of the empire, gave univerſal

ſatisfaction. In the midſt of this pleaſing aſpect of affairs, the public mind was ſuddenly agitated by the moſt alarming reports, that the diſmiſſion of the members of the late adminiſtration, and the encouragement given to the catholics reſpecting their claims, and to the country at large reſpecting certain popular topics, had given ſuch great umbrage to the Britiſh cabinet, that the recal of the lord lieutenant, who, it was ſaid, had exceeded the previous arrangements upon which he undertook the government of the kingdom, was abſolutely determined upon.

Votes were paſſed, expreſſive of the confidence of both houſes in his excellency, and their regret at the idea of his departure; and it was even propoſed, but over-ruled, to vote only ſhort money bills, till it was ſeen what would be the ſubſequent conduct of the Britiſh cabinet. The Roman catholics, on this occaſion, voted an addreſs to his excellency, and alſo an addreſs to his majeſty, expreſſive of the ſame ſentiments on this ſubject. The latter has been ſince preſented by a deputation of three gentlemen, and received according to cuſtomary etiquette, very graciouſly, but (according to the ſame etiquette) without an anſwer. The merchants of Dublin, and ſeveral other meetings, likewiſe preſented addreſſes on this occaſion. In the mean time, earl Fitzwilliam has been actually recalled, and earl Camden appointed in his room. The corporation of Dublin, moreover, have ſince voted an addreſs to his majeſty, in which, 'They advert to his majeſty's promiſe of ſupporting the proteſtant religion as by law eſtabliſhed, and they expreſs their apprehenſion, that the petition of the catholic fellow-ſubjects now before parliament, cannot be granted with ſafety to the proteſtant conſtitution.

This laſt addreſs, however, did not paſs without the ſtrongeſt oppoſition, and a ballot taking place on every paragraph.

SHERIFFS appointed for the Year 1795.
(*See Page* 143.)

Shropſhire, Henry Bevan, of Shrewſbury,
Somerſetſhire, Edward Lyne, of Saltford,
Yorkſhire, Mark Sykes, of Sledmire, eſqrs.

Alterations.

Devon, Philip Morſhead, of Widey, *vice* William Clarke, eſq. deceaſed.
Cardigan, Thomas Bonfal of Trodfraith, *vice* James Lloyd.
Carnarvonſhire, William Jones, of Bodfaur, *vice* William Lloyd.
Herefordſhire, John Green, to be John Moore Green, of Cagebroke.
Radnorſhire, Francis Fowke, of Boughrood, *vice* Thomas Grove.
Warwick, William Little, of Kenilworth, *vice* Francis Holyoake.

BIRTH.

LADY of Henry Daſhwood, bart. a ſon.

MARRIAGES.

Lieutenant Laſcelles, ſon of lieutenant-general Laſcelles, to miſs Gould, daughter of ſir Charles Morgan, bart.

Earl of Dalkeith, to the hon. miſs Harriet Townſhend, daughter of lord Sydney.

Hon. Robert Banks Jenkinſon, to lady Louiſa Hervey, daughter of the earl of Briſtol and biſhop of Derry.

DEATHS.

LADY Hill.
Sir Hugh Hill, bart.
Thomas earl of Bective.
Sir Thomas Maſſey Stanley, bart.
Jane ducheſs dowager of Athol.
Viſcounteſs Colloſeau, ſiſter of ſir John Trevalyon, bart.
Hon. admiral Keith Stewart.
Baſil William Douglas, lord Daer.
Sir Henry Houghton, bart. M. P.
William Moſtyn Owen, eſq. M. P.
Sir William Erſkine, bart.

PROMOTIONS.

GEorge John earl Spencer, Charles George lord Arden, Charles Small Pybus, ſir Charles Middleton, bart. lord Hugh Seymour, Philip Stephens, and James Gambier, eſqrs.—Lords of the admiralty.

Philip Stephens, eſq.—a bart. with remainder to his nephew Stephens Howe, eſq.

Lord Hugh Seymour and lord Villiers—Gentlemen of the bed-chamber to the prince of Wales.

William Churchill, eſq.—Firſt groom of the bed-chamber, maſter of the robes, and privy purſe to his royal highneſs.

Lieutenant-colonel Hervey Aſton—one of the grooms of the bed-chamber.

Right hon. Thomas Pelham—a privy-counſellor.

John Jeffries earl Camden—Lord-lieutenant of Ireland.

Henry Willoughby Rooke, eſq.—Page of honour to his majeſty.

BANKRUPTS. From the GAZETTE.

FEBRUARY 28.

John Morgan, of Short's-gardens, in Drury-lane, corn-chandler.

Adam Archbald, of Hatton-wall, St. Andrew, Holborn, bedstead-maker.

Thomas Clarkson, of Bear-street, Wapping, ship-owner.

William Newbald, of Jamaica-row, Bermondsey, merchant.

Edmund Lord, of Mill-croft, in Lancashire, cotton-manufacturer.

Jonathan Hague, of Sheffield, in Yorkshire, merchant.

Isaac Fluke, of Manchester, cabinet-maker.

William Cross, of Manchester, linen-draper.

MARCH 3.

John Whichlow, of Knightsbridge, horse-dealer.

Thomas Gill the elder, of High-street, Lambeth, hog-butcher.

Joseph Robinson, of Upper Thames-street, wine-merchant.

Edward Stephens, of Park-street, Hanover-square, carver and gilder.

Edward Knight, of Brick-lane, Old-street, sailcloth-manufacturer.

Joseph Sykes, of Holt Leith in Lingards, Yorkshire, clothier.

Charles Landale, of St. Martin's-street, Leicester-fields, taylor.

Thomas Heath, of Tottenham-court-road, smith.

MARCH 7.

Stephen Borcham, of Haverill, Suffolk, butcher.

James Wall, of New Bond-street, hatter.

Thomas Watts, of Hampton, brewer.

John Marston, of Birmingham, rope-maker.

William Kenworthy, of Quickwood, in Yorkshire, dyer.

William Hill, of Birmingham, broker.

Samuel Gifford, of Exeter, dyer.

Richard Jones, of Cullum-street, Fenchurch-street, wine-merchant.

Henry Worrall the younger, of Sheffield, in Yorkshire, grocer.

John Parkin, of Sheffield, in Yorkshire, cast steel-maker.

Philip Hibner, of West-Ham, in Essex, dyer.

MARCH 10.

John Rix Birch, of Wingfield, in Suffolk, money-scrivener.

Richard Woosnam, of Pwllhely, in Caernarvonshire, merchant.

Ephraim Moses, of Goulston-square, Whitechapel, merchant.

Joseph Gibbs the younger, of New Sarum, in Wilts, glover.

Charles Bennett, of Chancery-lane, boot-maker.

Thomas Yeo, of Clifton, in Gloucestershire, dealer.

William Thornton, of Church Garforth, in Yorkshire, dealer in cattle.

William Ball, of Kington, in Herefordshire, butcher.

MARCH 14.

Thomas Massey, of Snow-hill, stationer.

William Ludlam, of Queen-street, London, merchant.

Colin Macrae, of Orange-street, Leicester-square, printer.

John Browning, of Oxford-street, carpenter.

William Henley, of Newton-bushel, in Devonshire, merchant.

MARCH 17.

James Guy, of Fleet-street, linen-draper.

Benjamin Partridge, of Halesowen, in Salop, grocer.

Daniel Moore, of Middlewich, in Cheshire, mercer.

Richard Rossiter, of Liverpool, hatter.

Edward Platt, of Redruth, in Cornwall, linen-draper.

George Perks, of Alcester, in Warwickshire, mercer.

John Barber, of Manchester, joiner.

James Thorburn, of Halifax, Yorkshire, linen-draper.

MARCH 21.

Philip Sarell, of Exeter, dealer.

Thomas Winsor the younger, of Chard, in Somerset, innholder.

James Johnston, of St. James's, Westminster, brewer.

MARCH 24.

William Rainy, of Lawrence-lane, warehouseman.

John Loton, of Bridge-street, Westminster, hosier.

Joseph Errington, of Kilburn-wells, coachmaster.

Anne Tudor, of Madeley, in Salop, vintner.

Henry Haswell, of Nicholas-lane, London, painter.

George Morton, of Long-acre, coachmaker.

NEW PUBLICATIONS.

NIcholson's Dictionary of Chymistry, 2 vol. 4to. 2l. 16s.

History of Poland to the Year 1795, 8vo. 8s. 6d.

Chantreau's Travels in Ruſſia, 2 vol. 8vo. 12s.

Plowden's Hiſtory of the Britiſh Empire 1794, 8vo. 5s. ſewed.

Campbell's Journey over Land to India, 4to. 1l. 4s.

Hiſtory of the Emperor Philip and his Daughters, 2 vol. 8vo. 14s.

Trotter's Medical and Chymical Eſſays, 8vo. 3s. 6d. ſewed.

Beloe's Miſcellanies, from the Arabic, 3 vol. 12mo. 12s.

Maternal Letters to a Young Lady, on her Entrance, into Life, &c.

Waſey's Corſica, a Poem, 1s. 6d.

Auguſta Denbeigh, 3 vol. 12mo. 10s. 6d.

Phantoms of the Cloiſter, 3 vol. 12mo. 10s. 6d.

Abbey of St. Aſaph, 3 vol. 12mo. 10s. 6d.

D'Iſraeli's Eſſay on the Manners and Genius of the Literary Character, 8vo. 5s.

Jamieſon's Vindication of the Doctrine of Scripture, 2 vol. 8vo. 16s.

Kite's Eſſays and Obſervations, Phyſiological and Medical, 8vo. 6s.

Gordon's (Sir Adam) Diſcourſes, 2 vol. 8vo. 14s.

Wynperſſe's Demonſtration of the Divinity of Chriſt, 3s. ſewed.

Thoughts on the Manner of ſpending the Paſſion Week, 1s.

Martin's (Sarah) Experienced Houſekeeper, 8vo. 6s.

Hay's (William) Works in Proſe and Verſe, 2 vol. royal 4to. 2l. 16s. boards.

Crotchet Lodge, a Farce, 1s.

Haultain's Comment on the Catechiſm, 1s. 3d.

Waſhington's Official Letters to the American Congreſs, 2 vol. 8vo. 14s.

Mitchell's (Miſs) Tales for Young Perſons, 2 vol. 12mo. 6s.

Leyceſter's Obſervations on the Ten Commandments, 1s. 6d.

Gordon's Treatiſe on the Epidemic Puerperal Fever of Aberdeen, 8vo. 3s. ſewed.

Royal Captives, 2 vol. 12mo. 7s.

Collection of Hymns and Pſalms, by Dr. Kippis, &c. ſmall 8vo. 5s. 6d. and 18mo. 3s. 6d.

Adams' View of Univerſal Hiſtory, 3 vol. 8vo. 1l. 1s.

Browne on the Immortality of the Soul, tranſlated by Lettice, with the original Latin Poem, 8vo. 5s. 6d.

AVERAGE PRICES of CORN.

March 14, 1795.

By the Standard Wincheſter Quarter of Eight Buſhels.

INLAND COUNTIES.

	Wheat.		Rye.		Barley.		Oats.	
	s.	d.	s.	d.	s.	d.	s.	d.
Middleſex	64	2	39	8	36	6	27	7
Surry	63	6	37	0	35	10	29	6
Hertford	62	6	——		36	0	25	9
Bedford	62	0	40	6	34	4	25	2
Huntingdon	59	1	——		33	8	22	0
Northampton	59	8	45	0	32	7	22	6
Rutland	58	0	——		36	0	22	0
Leiceſter	62	4	——		36	9	25	2
Nottingham	61	4	45	0	39	10	24	0
Derby	61	9	——		41	8	24	7
Staffordſ	63	9	——		40	9	24	10
Salop	62	9	49	4	39	10	28	4
Hereford	58	5	44	8	38	4	24	11
Worceſter	63	2	——		39	10	30	4
Warwick	66	5	——		40	4	29	9
Wilts	58	0	——		37	0	26	0
Berks	62	10	——		35	3	26	8
Oxford	60	4	——		35	6	16	8
Bucks	63	0	——		33	8	25	2
Brecon	60	10	48	0	35	11	19	4
Montgomery	54	5	——		33	7	19	9
Radnor	58	11	——		35	9	22	3

MARITIME COUNTIES.

Eſſex	61	6	33	6	34	9	27	0
Kent	58	7	34	6	34	3	20	0
Suſſex	56	8	——		34	6	15	2
Suffolk	60	6	36	6	33	6	25	3
Cambridge	52	1	37	10	31	7	19	2
Norfolk	58	3	38	6	30	7	22	9
Lincoln	54	11	——		34	1	20	7
York	53	5	45	4	32	8	20	11
Durham	51	10	——		32	4	20	11
Northumberland	49	6	36	9	27	11	19	8
Cumberland	57	4	46	4	29	0	19	5
Weſtmorland	57	7	45	0	30	9	20	11
Lancaſter	64	5	——		30	2	23	7
Cheſter	59	10	——		36	10	22	9
Flint	64	0	——		41	7	——	
Denbigh	62	9	——		40	0	19	2
Angleſea	——		——		34	0	——	
Carnarvon	61	4	44	0	37	0	17	4
Merioneth	62	1	52	6	37	8	18	2
Cardigan	54	3	42	6	30	0	16	0
Pembroke	46	0	——		33	1	16	1
Carmarthen	50	11	——		31	9	15	11
Glamorgan	62	7	——		34	9	18	11
Glouceſter	62	6	——		37	0	27	11
Somerſet	60	11	——		35	5	19	0
Monmouth	60	10	——		39	1	23	8
Devon	64	10	——		32	9	20	7
Cornwall	57	4	——		30	5	18	0
Dorſet	59	3	——		33	1	25	0
Hants	59	3	——		34	6	26	7

Peck Loaf, 3s. 1d.

PRICES of STOCKS, from FEBRUARY 26, to MARCH 27, 1795, both inclusive.

By ANTHONY CLARKE, Stock-Broker, No. 13, Sweeting's-Alley, Cornhill.

Days	Bank Stock.	3 per C. reduced.	3 per C. consols.	4 per C. consols.	5 per C. consols.	Long Ans.	Short Ans.	India Stock.	India Bonds.	South Sea Stock.	Old Ann.	New Ann.	Navy Bills.	English Lot. Tic.
26	152 5/8	63 7/8	62 1/2 a 3/8	79 1/4	96 7/8	18 3/8	8 7/8	181 1/2	4s. pr.	—	—	—	2 3/4 dis.	—
27	152 1/2	63 7/8	62 1/4 a 63	79 3/4	94 7/8	18 3/8	8 7/8	181	6	—	—	—	2 3/4	—
28	152 3/4	64	62 3/8 a 1/4	79 1/4	94 1/4	18 3/8	8 7/8	181 1/4	8	—	—	—	2 1/2	—
2	153	64	62 5/8 a 63	79 7/8	94 3/4	shut.	8 7/8	182	—	—	—	—	2 5/8	—
3	153 1/2	64 1/8	63 1/8 a 62 7/8	79 3/8	94 3/4	—	8 7/8	181 1/4	7	—	—	—	2 1/2	—
4	shut.	64 1/4	62 1/2 a 3/8	79 1/4	94 3/4	—	8 7/8	shut.	7	—	—	—	2 5/8	—
5	153 3/4	shut.	62 5/8 a 3/8	79 1/4	94 1/4	—	8 7/8	181 1/4	5	—	—	—	2 1/4	—
6	154	—	62 5/8 a 1/8	79 3/8	94 3/8	—	8 7/8	181 1/2	5	—	—	—	2 3/4	—
7	—	—	62 1/2 a 3/8	79 1/2	94 1/2	—	shut.	—	4	—	shut.	—	2 3/4	—
9	—	—	62 3/8 a 1/4	shut.	94 1/4	—	—	182 1/2	4	66 1/4	—	—	2 7/8	—
10	154 3/8	—	62 1/2 a 3/4	—	94 1/4	—	—	182 1/2	3	—	—	62 1/2	2 7/8	—
11	154	—	62 3/8 a 5/8	—	94 1/4	—	—	182	3	66 3/8	—	—	3 1/8	—
12	153 1/2	—	62 1/4 a 3/8	—	94 1/8	—	—	181 1/2	2	—	—	—	3 1/8	—
13	154 1/4	—	62 1/4 a 3/4	—	94 3/8	—	—	182 1/2	3	—	—	—	3	—
14	—	—	62 1/4 a 1/2	—	94 3/8	—	—	—	2	—	—	—	2 7/8	—
16	—	—	62 5/8 a 3/8	—	94 3/4	—	—	—	—	—	—	—	2 7/8	—
17	153 3/4	—	62 3/8 a 1/4	—	94 3/4	—	—	182	—	—	—	—	2 7/8	—
18	—	—	62 1/8 a 61 3/4	—	94 3/8	—	—	—	—	—	—	—	3 1/8	—
19	153	—	62 a 61 3/4	—	94 3/4	—	—	181 3/4	3s. dis.	—	—	—	3 1/8	—
20	153 3/4	—	62 1/8 a 61 7/8	—	94 3/8	—	—	182	4	—	—	—	3 1/8	—
21	—	—	62 1/8 a 1/4	78 3/4	94 3/8	—	—	—	2	—	—	—	3 1/4	—
23	—	—	62 3/8	78 5/8	94 3/8	—	—	—	1	—	—	—	3 1/4	—
24	153 3/8	—	62 1/8 a 62	—	94 3/4	—	—	182	—	—	—	—	3 1/4	—
25	—	—	—	—	—	—	—	—	—	—	—	—	—	—
26	—	—	62 a 3/4	78 5/8	94 3/4	—	—	182 3/4	1	—	—	—	3 1/2	—
27	—	—	62 a 1/8	78 1/2	95 7/8	—	—	182	3	—	—	—	3 7/8	—

☞ In the 3 per Cent. consols. the highest and lowest Price of each Day is given; in every other Article the highest Price only, the Long and Short Annuities excepted, which are given within a sixteenth of the highest Price. In the different Funds that are shut, the Prices are given with the Dividend till the Days of Opening.

An Account of ſome pretended PROPHETS, *in the Reign of Queen* Anne, *and particularly of* NICOLAS FATIO, *a celebrated Philoſopher and Mathematician.*

To the Editor of The Univerſal Magazine.

Sir,

*The recent Pretences to a prophetic Character, which Government have thought proper to notice, and the extraordinary Circumſtance of their being countenanced by a Member of the Britiſh Senate *, a very learned Man, and elegant Writer, have induced me to ſend you the following Extract from a Note, by Dr.* Kippis, *to his Life of Dr.* Edmund Calamy, *in the* Biographia Britannica; *by which it appears, that no Extent of Genius, or high Attainments in Learning, can always ſecure the Mind from the Deluſions of Enthuſiaſm. I am, &c.*

LECTOR.

IN Dr. Calamy's manuſcript, a good deal is ſaid concerning the French prophets, who made ſo great a noiſe in the beginning of the preſent century, and a very particular account is given of John Lacy, eſq. a gentleman of the doctor's congregation, who became a noted follower of theſe enthuſiaſts, and who himſelf pretended to divine inſpiration. Our author had once an opportunity of ſeeing Mr. Lacy in one of his fits; part of the deſcription of which we ſhall tranſcribe. 'I went into the room where he ſat, and walked up to him, and aſked him how he did, and took him by the hand, and liſted it up, and it fell down flat upon his knees, as it lay before. He took no notice of me, nor made me any anſwer; but I obſerved the humming noiſe grew louder and louder by degrees, and the heaving in his breaſt increaſed, till it came up to his throat, as if it would have ſuffocated him, and then he at laſt proceeded to ſpeak, or as he would have it taken, the ſpirit ſpake in him. The ſpeech was ſyllabical; and there was a diſtinct heave and breath between each ſyllable: but it required attention to diſtinguiſh the words. I ſhall here add it, as far as my memory ſerves.

'Thou—haſt—been—my—faith—ful—Servant:—and—I—have—ho—nou—red—thee:—but—I—do—not—take—it—well—that—thou—ſligh—teſt—and—op—po—ſeſt—my—ſer—vants—and—meſ—ſen—gers.—If—thou—wilt—fall—in—with—theſe—my—ſer—vants,—thou—ſhalt—do—great—things—in—this—diſ—pen—ſa—ti—on:—and—I—will—uſe—thee—as—a—glo—ri—ous—in—ſtru—ment—to—my—praiſe;—and—I—will—take—care—of—thee—and—thine.—But—if—thou—go—eſt—on—to—op—poſe—my—ſer—vants,—thou—wilt—fall—un—der—my—ſe—vere—diſ—plea—ſure.—When the ſpeech was over, the humming and heaving gradually abated; and I again took him by the hand, and felt his pulſe, which moved pretty quick; but I could not perceive by his hands any thing like ſweating, or more than common heat.'

Some time after this, Mr. Lacy, without giving the leaſt notice, got up one morning, left his lady in bed, quitted his houſe and children, and, taking a few neceſſaries with him, went to live among the prophets. Here he took to himſelf for a wife, one Betty Grey, who had been a ſnuffer of candles in the playhouſe, but now paſſed for a perſon inſpired. This tranſaction, in one of his inſpirations, which Dr. Calamy ſaw, he called a quitting Hagar, and betaking himſelf to Sarah; and declared, that

* Nathanael Braſſey Halhead, eſq. member for Lymington, tranſlator of the Code of Gentoo Laws, &c.

he did it by the order of the ſpirit. At length, Mr. Lacy retired with this woman, by whom he had ſeveral children, into Lancaſhire, where he died in 1730. He perſiſted in his prophetic notions to the laſt, and never diſcovered any concern for his wife and children whom he had deſerted. It appears, from the account of a law-ſuit, in which Mr. Lacy was concerned, that he was a great rogue, as well as a great enthuſiaſt. But the union of roguery and enthuſiaſm is no ſurpriſing thing; the Hiſtory of the World proving, that ſuch an union hath ſubſiſted in a multitude of inſtances.

There was another perſon deeply engaged with the French prophets, whoſe abilities and character were far ſuperior to thoſe of Mr. Lacy. This perſon was, Nicolas Fatio Duillier, a native of Swiſſerland, who was born about the year 1662; and who, in early youth, became as remarkable for his proficiency in literature, as he was afterward for his enthuſiaſm. Biſhop Burnet, in the firſt letter of his travels, dated September 1685, ſpeaks of him as an incomparable mathematician and philoſopher, who, though only twenty-two years old, was already become one of the greateſt men of his age, and ſeemed born to carry learning ſome ſizes beyond what it had hitherto attained. While Dr. Calamy ſtudied at the univerſity of Utrecht, Mr. Fatio reſided in that city, as tutor to two young gentlemen, Mr. Ellys and Mr. Thornton, and converſed freely with the Engliſh. At this time he was generally eſteemed to be a ſpinoziſt; and his diſcourſe, ſays Dr. Calamy, very much looked that way. Afterward, it is probable, that he was profeſſor of mathematics at Geneva. About the latter end of the laſt, or the beginning of the preſent century, he came into England, and was honoured with the friendſhip of the moſt eminent mathematicians of that age. Sir Iſaac Newton, in particular, was intimately acquainted with him. Dr. Johnſtone, of Kidderminſter, has in his poſſeſſion a manuſcript, written by Fatio, containing Commentaries and Illuſtrations of different parts of Sir Iſaac's Principia. When Mr. Fatio attached himſelf to the new prophets, he became their chief ſecretary, and committed their warnings to writing, many of which were publiſhed. The connection of ſuch a man with theſe enthuſiaſts, and their being ſupported, likewiſe, by another perſon of reputed abilities, Maxamilian Miſſon, a French refugee, occaſioned a ſuſpicion, though without reaſon, that there was ſome deep contrivance and deſign in the affair. On the 2d of December 1707, Mr. Fatio ſtood in the pillory, at Charing-croſs, with the following words affixed to his hat; 'Nicolas Fatio, convicted for abetting and favouring Elias Marion, in his wicked and counterfeit prophecies, and cauſing them to be printed and publiſhed, to terrify the queen's people.' Nearly at the ſame time, a like ſentence was executed upon Elias Marion, one of the pretended prophets, and John d'Andè, another of their abettors. This mode of treatment did not convince Mr. Fatio of his error; and, indeed, the deluſion of a man of ſuch abilities, and ſimplicity of manners, was rather an object of compaſſion than of public infamy and puniſhment. Oppreſſed with the deriſion and contempt thrown upon himſelf and his party, this worthy enthuſiaſt retired, at laſt, into the country, and ſpent the remainder of a long life in ſilence and obſcurity. He died at Worceſter in 1753, being upward of ninety years of age. When he became the dupe of fanaticiſm, he ſeems to have given up his philoſophical ſtudies and connections. Mr. Fatio, beſide being deeply verſed in all branches of mathematical literature, was a great proficient in the learned and Oriental languages. He had read much, alſo, in books of Alchymy. To the laſt, he continued a firm believer in the reality of the inſpiration of the French prophets. Dr. Wall of Worceſter,

who was well acquainted with him, communicated many of the above particulars to Dr. Johnſtone of Kidderminſter, in whoſe hands are ſeveral of Fatio's fanatical manuſcripts and journals, and from which we have theſe particulars.

After the firſt proſecution of the French prophets, and when Mr. Emms, one of their followers, had not riſen from the dead, as they had foretold, that he would do in a particular day, government determined to proceed more ſeverely againſt them. Accordingly, orders were given to the attorney general to proſecute ſir Richard Bulkeley, and others, who were ringleaders in the affair. However, before any farther meaſures were purſued, lord Godolphin and Mr. Harley ſent a gentleman to Dr. Calamy, to conſult him upon the ſubject. The doctor anſwered, that he was abundantly convinced, after having fully conſidered the matter, that it was much the beſt for government to ſit ſtill, and not give the leaſt diſturbance to the new prophets, or their abettors. This advice he enforced by ſuch ſtrong reaſons, that it was attended to and followed; the conſequence of which was, that, in a little time, theſe enthuſiaſts ſunk into contempt, and dwindled away to nothing. Sir Richard Bulkeley, who was very ſhort and crooked, expected, under the new diſpenſation, to be made ſtrait and handſome in a miraculous way; but, to his great diſappointment and mortification, he died before the miracle was accompliſhed. Sir Richard, like Mr. Fatio, was a man of learning, though not in an equal degree.

Dr. Calamy publiſhed, 'A Caveat againſt the new Prophets, with a ſingle ſheet, in anſwer to ſir Richard Bulkeley's Remarks on the ſame, 1707-8.' Queen Anne ſent her thanks to Mr. Calamy for this tract, and for the ſervice he had done the public by it. The piece happening to be preſented to her majeſty by Mrs. Hill, after lady Matham, the ducheſs of Marlborough took offence at it, and was not ſatisfied till the author had convinced her that his book's paſſing into the hands of the queen, through that lady's conveyance, was entirely without his deſign or knowledge.

The LAWSUIT *againſt an unjuſt* DEITY: *A curious Chineſe Anecdote.*

ALTHOUGH the ſuperſtition of the Chineſe has multiplied, without end, the number of their idols; and though each family is particularly ſolicitous to honour thoſe which it has choſen and adopted, it does not appear that the people always entertain a ſincere reſpect for theſe pretended deities. It often happens, that they are abandoned and neglected, as gods without power, when they are too ſlow in granting the favours which are requeſted from them. In ſuch caſes, the patience of their votaries becomes exhauſted, and they carry their offerings ſomewhere elſe. Others, leſs moderate, treat them with the greateſt contempt, kick about, and load them with abuſive language: 'Thou dog of a ſpirit,' ſay they, 'we lodge thee in a commodious temple; and yet, after all the care beſtowed upon thee, thou art ſo ungrateful as to refuſe us even neceſſary things.'—They then tie the idol with cords, drag it through the kennels, and beſpatter it with filth, to puniſh it for all the perfume which they have uſeleſsly waſted upon it. If, during this ſcene of folly, theſe frantic devotees ſhould happen to obtain what they wiſh for, they carry back the image, with great ceremony, to its niche, after having carefully waſhed and wiped it: they even proſtrate themſelves before it, and make different excuſes for treating it with ſo little reſpect: 'Indeed,' ſay they, 'we were too raſh; but, after all, waſt thou not in the wrong to be ſo obdurate? Why ſhouldſt thou ſuffer thyſelf to be beaten without neceſſity? Would it have coſt thee more to grant

our requeſts with a good grace? But what is done, is done: let us think no more of it. We ſhall gild thee again, provided thou wilt forget what is paſt.'

A ludicrous circumſtance which happened in the province of Nanking, at the time F. le Compte reſided there, is a farther proof of the little reſpect which the Chineſe ſometimes entertain for their gods. A certain man, whoſe only daughter lay dangerouſly ill, after having, in vain, tried the art of the phyſicians, reſolved to implore the aſſiſtance of the gods. Prayers, offerings, alms, ſacrifices, all were employed to obtain the wiſhed-for cure. The bonzes, who fattened on theſe gifts, promiſed a cure, on the faith of the idol, whoſe power they ſo much extolled. The girl, however, died; and the father, in the exceſs of his grief, reſolved to be revenged, and to accuſe the idol, with all the ſolemnity of form: for which purpoſe, he laid his complaint, in writing, before the judge of the place. After having repreſented, in the ſtrongeſt terms, the deceitful conduct of the unjuſt divinity, he affirmed, that exemplary puniſhment ought to be inflicted upon it, for having broken its word: 'If the *ſpirit*,' added he, 'had power to cure my daughter, it was guilty of a groſs fraud, in taking my money, and ſuffering my daughter to die. If it had not power, why did it pretend to it; and by what right does it aſſume the character of a god? Is it for nothing that we adore it, and that the whole province offers ſacrifice to it?' In ſhort, he concluded, that whether it were want of power, or malice in the idol, its temple ſhould be razed, its miniſters baniſhed with diſgrace, and itſelf puniſhed in its own perſon.

The judge conſidered the affair as important, and referred it to the governor, who, unwilling to have any thing to do with the gods, begged the viceroy to examine it. The latter, after having heard the bonzes, who appeared much alarmed, called the plaintiff, and adviſed him to drop his ſuit: 'You are not prudent,' ſaid he, 'to quarrel with this kind of *ſpirits*: they are naturally malicious; and I am afraid they will ſerve you ſame diſagreeable trick. Believe me, you had much better liſten to the propoſals of accommodation which the bonzes will make you on their part. They have aſſured me, that the idol, on its ſide, will hearken to reaſon, provided you, on the other hand, do not puſh things to extremity.'

The man, oppreſſed with grief for the loſs of his daughter, perſiſted in his reſolution, and proteſted, that he would rather periſh than relax in his requeſt: 'My lord,' ſaid he, 'I am determined. The idol imagined, that it might commit, with impunity, every kind of injuſtice, and that no one would have courage to attack it; but it was miſtaken; and we ſhall ſoon ſee which of us is the moſt malicious and obſtinate.'

The viceroy, finding that he could not prevail upon the man to give up the point, ordered preparation to be made for trial; but, at the ſame time, gave information to the ſupreme council at Peking, before which the affair was carried, and where the parties, ſome time after, appeared. The idol did not want partiſans among the lawyers: thoſe to whom the bonzes offered money to defend it, found its right inconteſtable, and ſpoke with ſo much warmth in its favour, that the god, in perſon, could not have pleaded better: but they had to do with a man of ſtill greater penetration and ſhrewdneſs, who had prudently taken the precaution of ſupporting his proofs by a large ſum of money, which he employed, in order to make his caſe clearer to the judges; perſuaded that the devil would be very cunning, if he could withſtand ſuch a weighty argument. In ſhort, after ſeveral pleadings, he completely gained his cauſe. The idol was condemned to perpetual baniſhment, as uſeleſs in the empire; its temple was razed; and the bonzes, who repreſented its perſon, were puniſhed in an exemplary manner.

A Picturesque Description of the River RHINE, *from its Sources in* Switzerland *to its Entrance, under different Names, into the* German Ocean: *With Historical Anecdotes and Reflections.*

THE CONTENTS.

Rheinau, Eglisau, Kayserstuhl, Zurzac, and Coblentz.—Picturesque Scenery of the Aar and the Rhine compared.—Cataract of Lauffenburg.—Seckingen.—Rapidity of the River, and picturesque Bridge, at Rheinfelden.—Basil.—Erasmus.—The University.—City Learning.—Origin of the Petty States in Germany.—The Government of Basle.—The Bishopric.—The Canton.—Population and Commerce of Basle.—A curious Anecdote.—Poetical Character of the Swiss.—Inundations of the Rhine.—Fishery for Gold.—Old and New Brisach.—Contrast between Alsace and Switzerland.—Strasburg.—Curious Clock, and fine Cathedral.—Reflections on the View of a Gothic Structure.

FROM Lauffen the Rhine takes a southerly direction, and, soon after, forms the island of Rheinau, in which is a town of the same name, with a convent of Benedictines. Thence it takes a direction, nearly west, to Eglisau, in the canton of Zuric, below which it begins to be the boundary between Switzerland and Suabia. It then visits Kayserstuhl, Zurzac, and Coblentz, all very ancient towns in the county of Baden. Zurzac is celebrated for two annual fairs, much resorted to by the merchants of Germany and France; and Coblentz is a very important place, on account of its situation in the angle formed by the junction of the Rhine with the Aar. The latter river, having been considerably augmented by the tribute of waters from the Reuss and the Limmat, here vies, in size and rapidity, with the great river in which it loses its name. Its banks are agreeably enlivened by meadows and woods, and spotted occasionally with villages, castles, and ruins, hanging on the water's edge. Having made a small turn, it falls, by a strait channel, into the Rhine. Its waters, which are of a silvery hue, are, for a long way, distinguished from those of the Rhine, which, being transparent, and of a sea-green colour, seem to disdain the union. The banks of the Rhine are far superior, in wildness and beauty, to those of the Aar; in many parts, rising perpendicularly, yet feathered with wood; in others, sloping in gentle declivities, richly bordered with vines, forest, and pastures; and exhibiting a continual succession of towns and villages. Passengers, who are carried in boats down the rapid stream, at the rate of six miles an hour, disembark at Lauffenburg, one of the four forest towns of Suabia, seated on a rock, and divided into two parts by the river, which here forms a small cataract. Though this is greatly inferior to the fall at Lauffen, it deserves to be visited by travellers, for the beauty of the scenery. The view from the crags of the northern shore are very picturesque: the principal objects are, a high bridge, partly open and partly covered, supported by three lofty stone piers, on the south a row of houses, with an old ruined castle on the summit, boldly overhanging the water; a perspective of woods and meadows under the arches of the bridge; and the river dashing over its craggy bed, in a sloping cataract, until it loses itself suddenly among the rocks which close the view.

Half a mile below this fall, is the place of re-embarkation, and the stream pursues its course, by Seckingen and Rheinfelden, (each of them one of the four Forest Towns in

Suabia) to Baſle. Seckingen is ſeated on an iſland formed by the river, the waters of which, near Rheinfelden, ruſh with ſuch increaſing velocity, that they are agitated like the waves of the ſea, and, beating againſt the boats, have been known to turn them obliquely by their violence. In many parts, and for a conſiderable way, theſe veſſels are driven within a few inches of the ſhelving rocks, and are prevented from ſtriking againſt them only by the dexterity of the pilot. In a word, the paſſenger is hurried along with ſuch rapidity, that he has no time for obſervation, much leſs for deſcription: he can only catch a general glance of the romantic ſcenery, as the veſſel paſſes under a pictureſque bridge of ſeveral arches, ſuſpended above the ſurface of the river, and joined to a ſteep rock, on which tower ſome majeſtic ruins remain. On approaching Baſle, however, the ſtream becomes gradually leſs rapid.

At Baſle, or Baſil, the Rhine turns directly to the north. It is here a broad, deep, and rapid ſtream. Baſle is the capital of the Swiſs canton of the ſame name. It is the largeſt city in Swiſſerland, and is beautifully ſituated on both ſides of the river. The ancient, or great city, is on the weſtern, or Swiſs ſide of the river; the ſmall city, on the eaſtern, or German ſide: both are united by a bridge, ſix hundred feet long, and ſurrounded by walls and ditches. In the environs of the great city are five large ſuburbs, which are likewiſe incloſed by fortifications. The little river Birſig croſſes the great city, and the Birs, which falls into the Rhine, above Baſle, ſupplies it, by means of a canal, with water for various uſes.

The cathedral is an elegant Gothic ſtructure, but ſtrangely diſfigured by a daubing of roſe coloured paint ſpread over the whole edifice. What is moſt worthy of attention in it is the marble tomb under which are depoſited the great and venerable Eraſmus; a writer, who, to ſuperior learning, and a peculiar elegance of ſtyle, united the keeneſt wit, which he pointed, not only againſt the vices and ignorance of the monks, but the general corruptions and diſorders of the Roman church; and yet, ſuch was the moderation, or the timidity of this great man, that to this very church he zealouſly inculcated ſubmiſſive obedience. But whatever imperfections may be diſcovered in this illuſtrious character, his memory muſt be revered by every friend of genius, learning, and moderation. Livelineſs of imagination, depth and variety of erudition, with great ſagacity of judgment, were in him eminently united. He infuſed a ſpirit of elegance even into theological controverſies, and contributed to diſincumber literature from that ſcholaſtic jargon with which it was diſgraced. On this account he well deſerves the celebrated eulogy of Pope:

A ſecond deluge learning then o'er-run,
And the monks finiſh'd what the Goths begun.
At length, Eraſmus, that great injur'd name,
(The glory of the prieſthood, and the ſhame)
Stemm'd the wild torrent of a barbarous age,
And drove theſe holy Vandals off the ſtage.
ESSAY on CRITICISM.

Eraſmus, who was a native of Rotterdam, reflected much honour upon this city, by chooſing it as the favourite place of his reſidence, and publiſhing here the greateſt part of his valuable works *.

The univerſity of Baſle, which was founded in 1459, by pope Pius II, is the only one in Swiſſerland. It has a rich library, a botanical garden, and a collection of inſtruments for philoſophical experiments. If it be not frequented now ſo much as ſome other univerſities, it may boaſt of having enrolled among its members a great number of illuſtrious names; ſuch as Oecolampadius, Amerbach, the Baukins, Grynæus, Buxtorf, Wetſtein, Iſelin, the Bernoullis, and

* He died in 1536, at the age of ſixty-eight.

Euler. Learning, however, is not confined to the univerſity: in general, the ſons of the burghers, or citizens, receive an excellent education: they always learn Latin; and it is far from being uncommon, even for the lower ſort of tradeſmen, to employ their leiſure hours in the peruſal of Horace, Virgil, and Petrarch.

Three miles to the ſouth-eaſt of Baſle, where the little river Ergetz falls into the Rhine, is the village of Augſt, a ſpot which has furniſhed more antiquities and medals than any other in Swiſſerland. It was the ancient Roman colony called Auguſta Rauraca, or Auguſta Rauracorum, and was deſtroyed by Attila king of the Huns, ſo well known by the appellation of the Scourge of God. The few inhabitants that eſcaped from this ſavage conqueror joined with thoſe of Baſilea or Baſilia, to reſtore this city, which had been likewiſe ruined by the ſame barbarians. The new city, which was called, in the middle age, Baſula and Baſil, ſoon became, from its advantageous ſituation, and the fertility of the ſurrounding country, as populous and flouriſhing as thoſe times of ignorance and oppreſſion would permit it. In proceſs of time it became ſubject to the emperors of Germany. The period is well known, when the imperial authority was abſorbed by the uſurpations of the great vaſſals, in whoſe hands all the benefices of the ſtate became hereditary fiefs, which retained nothing of the firſt title but an empty ceremony of homage, and certain conditions of tenure, always ill obſerved, and often openly refuſed. The biſhops, by their addreſs, acquired the ſame prerogatives; by oppoſing to the ferocious ambition of theſe nobles, become too independent, the terrors of a thundering religion, and the tempting bait of abſolution; two modes of influence whoſe effect upon men will ever be in proportion to their ignorance. The eccleſiaſtics were enriched by their ſpoils, and ſoon balanced the power of the greateſt barons by the preference which the people gave to the domination of the clergy, which was not only milder and more peaceful, but, by the aid of religion, much better reſpected. When the biſhops of the Rauraci, therefore, transferred the epiſcopal ſee to Baſil, they aſſumed the ſovereignty of it, under the protection of the emperor of Germany, their lord paramount. Thus, all the conſiderable cities of Germany and Swiſſerland were indebted, almoſt entirely, to an epiſcopal ſee, or to ſome foundation of an abbey or chapter, for protection and tranquillity, and, conſequently, for aggrandizement. The riches of theſe houſes attracted the artiſans; and the eccleſiaſtical immunities extending to all the ſettlers, favoured not a little that induſtry, which had been diſturbed by the general anarchy and private wars, which had ſo long deſolated all the great eſtates of Europe. Moreover, the inferior nobility of the neighbourhood having found an aſylum from the tyranny of the great barons, in the cities, where they united to form a diſtinct body, they occupied, at firſt, all the public offices of police and juſtice in theſe riſing ariſtocracies. The citizens, properly ſpeaking, exerciſed the mechanic arts, and reſpected the adminiſtration of the men of family, whom they conſidered and acknowledged as the defenders of the community.

The biſhops of Baſle were gradually deprived of their prerogatives, and, in 1501, finally quitted the town, when the canton joined the Helvetic confederacy. The biſhops retired, at firſt, to Friburg, in Briſgaw, and afterward fixed their reſidence at Porentru. Upon the introduction of the information, in 1525, the conſtitution of Baſle was, in ſome meaſure, changed, and the power of the ariſtocracy limited; and, at preſent, among the different ſpecies of republican governments into which Swiſſerland is divided, there is not one more ſingular than that of Baſle. To view the general outlines of the conſtitution it

has the appearance of an abſolute ariſtocracy; but, had we room to conſider it in detail, it would be found to incline toward a democracy *.

The biſhop of Baſle ſtill retains his title †, and his territories are not inſignificant. They conſtitute what is called the *biſhopric* of Baſle, in contradiſtinction to the *canton* of Baſle. As part of the biſhopric is in Germany, in the circle of the Upper Rhine, its ſovereign, the biſhop, is a prince of the empire; but, from his relations with the Swiſs cantons, (to the diets of which, however, he ſends no deputy) we may conſider him, in ſome reſpects, as a member of the Helvetic body. His territory is bounded on the north, by the diſtrict of Sundgaw Proper, in Alſace; on the weſt, by Franche Compté; on the ſouth and eaſt, by the cantons of Bern, Soleure, and Baſle. It it about ſixty miles long by forty broad; beginning at the lake of Bienne, and extending acroſs Mount Jura, almoſt to the gates of the city of Baſle. It contains ſix towns, thirty-ſeven caſtles, and 170 villages. It is a very intereſting country for a naturaliſt; it is extremely rich in petrifactions; and here we may find, in miniature, all the ſingular objects, which the Alps exhibit. The canton of Baſle, is far from being ſo conſiderable as the biſhopric. It is bounded on the eaſt, by the Frichtal; on the ſouth, by the canton of Soleure; on the weſt, by the ſame canton and the biſhopric of Baſle; and, on the north, by the Alſace and Suabia: extending about twenty-four miles from north to ſouth, and twenty-one from eaſt to weſt.

The population of the city of Baſle ſeems to have been formerly much greater than it is at preſent: its extent makes it capable of containing above 100,000 inhabitants, but it ſcarcely numbers more than 14,000. This decline may be attributed to the narrow policy which actuates the citizens, who are ſo jealous of the rights of burgherſhip, and value themſelves ſo much on the privileges annexed to it, that they ſeldom deign to confer it upon foreigners; and as this place, in common with all great cities, experiences a gradual waſte of people, by the number of burials exceeding that of births, unleſs this unequal proportion is compenſated by a conſtant ſucceſſion of new inhabitants, in proceſs of time every great town muſt become depopulated; for a ſupply, to balance this waſte, can never be derived from an influx of ſtrangers, where they are not permitted to carry on commerce, or to follow any trade. A few years ago, ſome of the magiſtrates, ſenſible of the impolicy of this unlimited prohibition, procured a law, by which the freedom of the town, and the right of burgherſhip, was allowed to be conferred upon ſtrangers; but it was clogged with ſo many reſtrictions, as by no means to anſwer the purpoſe for which it was intended. In other reſpects, as Baſle ſtands very favourably for commerce, the inhabitants have not neglected this advantage; for they have eſtabliſhed a great variety of manufactures, particularly of ribands and cottons; and an extenſive trade is carried on by the merchants.

Of Baſle it is remarkable, that all

* 'An ariſtocracy, ſtrictly ſpeaking,' ſays Mr. Coxe, 'means that form of government, which places the ſupreme power in the nobles, excluſively of the people; but here I mean by it, the confining of the ſovereign authority to a certain limited number of perſons, without conſidering whether they are patricians or plebeians, nobles or commons: for, at Baſle, every citizen who is noble, and who chooſes to retain his title of nobility, is incapable of being elected a member of the ſovereign council.' *Vol. I.* 164. Moreover, the meaneſt citizen is legally capable of being admitted into that body; and, by the ſingular mode of election, he may poſſibly be choſen: for the vacancies in the two councils are ſupplied from all ranks of citizens, and the election is made by a *ſmaire*; that is, ſix candidates are nominated, and from theſe the ſucceſſor is appointed by lot.

† The Proteſtants, however, call him the prince of Porentru.

the clocks in the town go an hour too faſt. There are various accounts of this extraordinary circumſtance: the moſt popular one is, that, about 400 years ago, the city was threatened with an aſſault by ſurpriſe. The attack was to be made when the large clock of the tower, at one end of the bridge, ſhould ſtrike one after midnight. The artiſt, who had the care of the clock, being informed that this was the expected ſignal, altered the clock, and it ſtruck two inſtead of one; ſo that the enemy, thinking they were an hour too late, gave up the attempt. As a confirmation of this account, a head is ſhown, which is placed near this clock, with its face turned to the road by which the enemy were to have entered; and this head is contrived to loll its tongue out every minute, as if in deriſion of the plot. But there is another reaſon for this ſtrange cuſtom, which Mr. Coxe thinks the moſt probable. 'It is well known,' ſays he, 'that the choirs of cathedrals are conſtructed toward the eaſt: that of Baſle declines ſomewhat from this direction; and the ſun-dial, which is placed on the outſide of the choir, and by which the town clock is always regulated, partakes of this declination; a circumſtance which, according to the celebrated Bernouille, occaſions a variation from the true time of above forty-five minutes. The inhabitants of Baſle are ſtill ſo ſtrongly attached to this whimſical cuſtom, that, although it has been often propoſed, in the ſovereign council, to regulate their clocks properly, the motion has been invariably rejected; and the people would ſuſpect that their liberties were invaded, if their clocks were to agree with thoſe of the reſt of Europe.'

Below Baſle our noble river leaves Swiſſerland and its mountainous regions, where the curious naturaliſt, and the moral philoſopher may, find inexhauſtible ſubjects of contemplation:

Where the rough climes a noble race diſplay,
Where the bleak Swiſs their ſtormy manſion tread,
And force a churliſh ſoil for ſcanty bread.
No product here the barren hills afford,
But man and ſteel, the ſoldier and his ſword.
No vernal blooms their torpid rocks array,
But winter lingering chills the lap of May;
No zephyr fondly ſues the mountain's breaſt,
But meteors glare, and ſtormy glooms inveſt.
Yet ſtill, even here, content can ſpread a charm,
Redreſs the clime, and all its rage diſarm.
Though poor the peaſant's hut, his feaſts though ſmall,
He ſees his little lot the lot of all;
Sees no contiguous palace rear its head,
To ſhame the meanneſs of his humble ſhed;
No coſtly lord the ſumptuous banquet deal
To make him loath his vegetable meal;
But calm, and bred in ignorance and toil,
Each wiſh contracting, fits him to the ſoil.
Cheerful at morn, he wakes from ſhort repoſe,
Breathes the keen air, and carols as he goes;
With patient angle trolls the finny deep,
Or drives his vent'rous plough-ſhare to the ſteep;
Or ſeeks the den where ſnow-tracks mark the way,
And drags the ſtruggling ſavage into day.
At night returning, every labour ſped,
He ſits him down the monarch of a ſhed;
Smiles by his cheerful fire, and round ſurveys
His childrens' looks that brighten at the blaze;
While his lov'd partner, boaſtful of her hoard,
Diſplays her cleanly platter on the board:
And haply too ſome pilgrim, thither led,
With many a tale repays the nightly bed.
Thus every good his native wilds impart,
Imprints the patriot paſſion on his heart;
And ev'n thoſe hills that round his manſion riſe,
Enhance the bliſs his ſcanty food ſupplies.
Dear is that ſhed to which his ſoul conforms,
And dear that hill that lifts him to the ſtorms;
And as a child, when ſcaring ſounds moleſt,
Clings cloſe and cloſer to his mother's breaſt,
So the loud torrent, and the whirlwind's roar,
But bind him to his native mountains more.

GOLDSMITH.

The Rhine now divides Alſace from Suabia; and the firſt place it waters is the fortreſs of Huninguen, which is ſituated in the diſtrict of Sundgau, in that part of Alſace, which the French, ſince the revolution, have named the department of the Upper Rhine, as they have that of the Lower Rhine to Lower Alſace.

The Rhine, which thus ſerves as a frontier to Alſace, on the eaſt, frequently cauſes terrible devaſtations, not only in winter, but in the midſt of ſummer, when the ſnow melts on the Alps. Its inundations then ruin the fields, by covering them with ſand. The violent torrents of the river, which generally happen every year, frequently alter the ſituation of its iſlands. In this river are found particles of gold, which the torrents waſh from the Alps; but it is only below Baſle, that the ſand contains this precious mixture, which, in autumn and winter, when the river is at the loweſt, is drawn out with the ſand, and, after paſſing through ſeveral waters, the gold is extracted. The particles of this metal are ſeldom ſo large as a grain of millet. The gold, indeed, is very fine and beautiful; but it is ſo ſcarce, that the city of Straſburg, which has the privilege of gathering gold for the length of 4000 paces, ſcarcely collects five ounces in a year. The river alſo contains many cryſtals, and particularly pebbles, that receive a beautiful poliſh, and are much uſed in France, under the name of Rhine pebbles.

From Huninguen the river flows to Old and New Briſach. The former is a town of Suabia, once the capital of the Briſgaw. It was taken by the French in 1638 and 1703, but was reſtored, each time, to the houſe of Auſtria. It has a bridge of boats over the Rhine, to New Briſach, a handſome town of Alſace, about a mile from the river. It was built by the French, and fortified by Vauban. Fort Mortier, which belongs to it, is ſeated cloſe to the Rhine, which flows hence, without meeting with any place of conſequence, for twenty-five miles, when it viſits the celebrated city of Straſburg, the capital of all Alſace, or the two French departments of the Upper and Lower Rhine. Nothing can form a finer contraſt to the mountains of Swiſſerland than the plains of Alſace. From Baſle to Straſburg, the country is a continued well-cultivated plain, almoſt as flat as a bowling-green. Great quantities of tobacco are to be ſeen hanging at the peaſants' doors, this herb being plentifully cultivated in theſe fields.

Straſburg is an ancient city, commercial, rich, and beautiful. It is ſeated at the diſtance of a quarter of a league from the Rhine, a canal from which forms ſeveral others in the city, which is croſſed, moreover, by the river Ill. Two ſtone, and four wooden bridges, form communications between the different wards of the city. The inhabitants are computed at 46,000, excluſive of the garriſon. The principal ſtructures are built of a red ſtone, dug from quarries on the banks of the Rhine. This city, once imperial, was taken by Louis XIV, in 1682. The citadel and other fortifications which that monarch erected here, have been ſo much improved, that Straſburg is conſidered as one of the ſtrongeſt places in Europe. It was confirmed to the French by the treaty of Ryſwick in 1697. It is entered by ſix gates. The ſtreets, in general, are narrow; but the principal ſtreet, and two others, are broad, regular, and handſome. Before the revolution, Straſburg was an archiepiſcopal ſee; but it has ſince been degraded into a biſhopric, ſuffragan to Beſançon. Whatever may be the fate of epiſcopacy in France, this prelate, by virtue of the two diſtricts which he holds, as a temporal lord, on the other ſide of the Rhine, is ſtill a prince of the empire, and has a ſeat and voice in the diet. In the cathedral is a clock, which ſhows the motions of the conſtellations, the revolutions of the ſun

and moon, the days of the week, the hours, &c. When this clock was firſt conſtructed, it was deemed a maſterpiece of mechaniſm and aſtronomy; but, by modern artiſts, it is beheld with indifference. One circumſtance, however, is very remarkable: it has been found impoſſible, at any expence whatever, to reſtore ſuch of the movements as have ſtopped. Another remarkable object is the pyramidical tower, which is pierced through, and pinked, like lace-work. It is 549 feet high, and is aſcended by 635 ſteps. On the whole, the cathedral of Straſburg is a very fine building, and never fails to attract the attention of ſtrangers. 'No ſpecies of architecture,' ſays Dr. Moore,' is better contrived for the dwelling of *heavenly penſive Contemplation* than the Gothic. It has a powerful tendency to fill the mind with ſublime, ſolemn, and religious ſentiments: the antiquity of the Gothic churches contributes to increaſe that veneration which their form and ſize inſpire. We naturally feel a reſpect for a fabric into which we know that our forefathers have entered with reverence, and which has ſtood the aſſaults of many centuries, and of a thouſand ſtorms.'—From the pen of Dr. Moore, theſe reflections deſerve attention; for they are ſerious, and even ſentimental: perhaps, however, they will not command implicit acquieſcence: perhaps, the awful ſenſations which a Gothic ſtructure excites, may reſult more from the conſecration of poetry than the conſecration of religion. When the poet deſcribes the manſions of gloom and ſolitude, who can forbear feeling the momentary impreſſion?

But let my due feet never fail
To walk the ſtudious cloiſters pale,
And love the high embowed roof,
With antique pillars maſſy proof,
And ſtoried windows richly dight,
Caſting a dim religious light.

MILTON.

Or where, with Eloiſa, the perſonifies Contemplation and Melancholy?

In theſe lone ſcenes, theſe melancholy aiſles,
Where heavenly penſive Contemplation dwells,
And ever-muſing Melancholy reigns—

POPE.

But what, on a retroſpect of thoſe remote ages, when our anceſtors entered theſe temples with reverence, ſhould 'fill the mind with ſublime, ſolemn, and religious ſentiments?' What was the piety, what the devotion of theſe anceſtors? It was a piety and devotion compatible with the moſt degrading ideas of moral worth, and with a perpetual violation of the laws of virtue. Religion, or rather ſuperſtition, under that heavenly name, 'lifted up her mitred front in courts,' and forgetful that her divine maſter had declared his kingdom not to be of this world, was employed, with unholy ambition, in the inceſſant accumulation of its riches and honours. The recollection of times, when every cuſtom and opinion that can degrade humanity were to be found; when the moſt cruel tyranny and the groſſeſt ſuperſtition reigned without controul; when men ſeemed to have loſt, not only the light of learning, but of their common reaſoning; in a word, when even the clergy were ſo profligate, as publicly to ſell abſolutions, at certain fixed rates, for the moſt atrocious crimes; ſhould rather excite the pleaſing ſenſations of contraſt, and fill the mind with joy and gratitude, that we now live in times, in which the nature and neceſſity of moral excellence are now ſo well underſtood, and in which the eſſential conſtituents of true piety are univerſally allowed to be uniform rectitude in the ſight of God, an unaffected purity of life and manners, and an extenſive benevolence to our fellow-creatures. The ſight of a Gothic cathedral has, therefore, the ſame effect upon me, in a religious view, as the proſpect of an ancient caſtle has in a political light. We behold the reſidence of ſome ferocious baron, whoſe turbulence had ſpread deſolation and miſery around;

we recollect the horrors of feudal deſpotiſm; and inſtead of venerating the memory of the titled ſavages of thoſe times, we feel here too the cheering and ſoul-ennobling ſentiments of joy and gratitude, in contraſting thoſe gloomy ages with the preſent enlightened period, when the bleſſings of liberty alſo are ſo well underſtood and ſo uniformly enjoyed.

[To be continued.]

ON THE LOVE OF SUPERIORITY.

NOTWITHSTANDING the diſſatisfaction ſo commonly expreſſed by men, when ſpeaking of their ſituations in life, it will be found, by an attentive obſervation of characters, that a conſciouſneſs of ſuperiority is the more predominant failing. Whatever men may actually think, we always find them extremely eager in expreſſing ſomething that ſhall convey a notion of their comforts and happineſs, not without a glance at the ſituation of others who are not equally the favourites of fortune. No man, for inſtance, whatever he may think, or whatever he may really be, will call himſelf poor, unleſs he is perſuaded that his words will be underſtood in quite a different ſenſe; and few men will call themſelves ignorant, unleſs they have a chance to be complimented an account of their knowledge. And ſuch is the nature of that popular virtue called politeneſs, that a learned man has not a better chance of receiving the reward due to his merit, than a blockhead has to be put upon a footing with him.

Thoſe who contend for ſuperiority, may be divided into two claſſes; the firſt conſiſting of perſons of virtue, genius, rank, title, and wealth, who actually poſſeſs ſome qualities which, in the general opinion of mankind, confer ſuperiority; the ſecond conſiſting of thoſe who ſeize upon ſome adventitious circumſtances, nowiſe neceſſarily connected with themſelves, in order to eſtabliſh a ſuperiority. Or, in ſhorter terms; thoſe who value themſelves upon ſomething, and thoſe who value themſelves upon nothing. It would be a very difficult matter, indeed, to aſcertain the reſpective merits of all theſe candidates, 'for the uppermoſt ſeats:' for what would that be leſs than taking a ſurvey of the merits and whims of all mankind, to which no one man's life and opportunities of obſervation would be equal? Some remarks, however, may be made on certain detached parts of this 'mighty maze.'

It may, in the firſt place, be remarked, with reſpect to rank, wealth, and title, that there is a rule by which the wiſer part of mankind are always guided in forming their eſtimate: and it is a very ſimple as well as a very juſt rule; namely, 'never to reſpect a man upon account of theſe qualities, without conſidering how he came by them, and what uſe he makes of them.' Now, although the ignorant, the poor, and the dependent, are upon various accounts diſabled from meaſuring by this rule, yet, as the opinion of ſuch does not conſtitute true fame, a wiſe man will rather abide by the opinion of the diſcerning few, and be eager to obtain it in its moſt favourable degree. A man, therefore, who is born to wealth and title, is no more deſerving of them, or, in other words, ought no more to be proud of the ſuperiority they ſeem to give, than he ought to be proud of being born at all, ſince he has no more merit in the one caſe than in the other. Such a man, if he wiſhes to preſerve the accidental ſuperiority of his being born in a palace inſtead of a cottage, will do well to ſtudy how to be of ſuch benefit to mankind, by a liberal uſe of his wealth and patronage, and by the cultivation of his mind according to the ſuperior opportunities granted him, that his rank and riches ſhall beſtow upon him an *actual* ſuperiority, and a diſ-

tinction which men will be proud, and not constrained to own.

The man, again, whose rank and wealth are of his own creation, the produce of his industry or talents, will find that, although he may pride himself on this circumstance, and think himself as superior to the man of hereditary rank and riches, as he is to the mass of mankind, yet this superiority will be pertinaciously denied him, if his pretensions to what he has acquired shall not be found valid. If, for instance, it shall be found that he has risen by arts of meanness, by corruption, by flattery, or by fraud, he will be much farther from receiving the meed of honour and respect, than the poorest of his dependants.

The man of genius is not less apt than either of the abovementioned to assert his superiority; but, without the same exceptions, he will be equally unsuccessful. When we take a survey of the lives of the learned, which have in general been handed down to us with considerable fidelity, we find many unhappily deprived of the respect which genius might demand, by their having either wholly neglected it, or used it to the worst of purposes. Nevertheless, we frequently see the man of genius setting up the proudest pretensions to superiority, and affecting to despise wealth, titles, and honours, which, if we could fairly see into his inmost thoughts, would probably be found to be his secret and eager wish: so inconsistent are men's *expressed* from their *real* opinions.

It has been advanced, that the second class of candidates for superiority, are those who value themselves upon nothing, that is, upon things which have not in themselves an actual value or consequence. Instances of this folly are so common, that they have, in all ages, furnished men of humorous talents with the most ridiculous objects of satire. The late facetious, as well as learned antiquary, captain Grose, gives us a very curious account of that affectation of superiority, which arises from the accidental circumstance of our living in one part of the town and not in another, or in one street and not in another. 'London,' says he, 'is divided into the suburbs, city and court (or, as it is styled, east of Temple-bar, and *t'other end of the town*) and again subdivided into many degrees and districts, each in a regular climax conferring ideal dignity and precedency. The inhabitants of Kent-street, and St. Giles' are mentioned by those of Wapping, White-chapel, Mile-end, and the Borough of Southwark, with sovereign contempt; while a Wappinger, a Mile-ender, and a Borroughrian, are terms proverbially used, about the Exchange and Fenchurch-street, to express an inferior order of beings; nor do the rich citizens of Lombard-street, even lose the opportunity of retailing the joke of a Whitechapel fortune. The same contempt is expressed for the *cits* inhabiting the environs of the Royal Exchange, or residing within the sound of Bow-bell, St. Bennet's Sheer Hog, Pudding-lane, and Blow-bladder-street, by the inferior retainers of the law in Chancery-lane, Hatton-garden, and Bedford-row; and these again are considered as people living totally out of the polite circle by the dwellers in Soho, and the aspiring tradesmen settled in Bloomsbury, Queen's, and Red-lion-squares, in the first flight from their counting-houses, in Thames street, Billingsgate, and Mark-lane. The new colonies about Oxford-street, sneer at these would-be people of fashion, and are, in their turns, despised by those whose happier stars have placed them in Pall-mall, St. James', Cavendish, and Portman-squares.'

The chief merit of this satirical effusion of captain Grose, is, that it is precisely and literally just, and what we meet with every day expressed in one shape or other. Such claims of superiority, however, are not to be mentioned without the proper inferences to be drawn from them. They shew us how very contemptible

a thing pride is when frittered down into ſuch infinite ramifications in low and vulgar minds; and it is not too much to ſay, that it might be expected pride itſelf would receive a blow from the poor and deſpicable uſe made of it. Pride is not wholly a vice. There is an honeſt pride, a dignity, and a conſequence, which ariſe from real merit; and though it may be carried too far, its natural tendency is to preſerve from meanneſs and low actions. When that ſame paſſion, however, comes to be exerted only upon ſuch trifling objects, it is time that we ſubſtitute humility in its place, and thereby acquire the diſtinction which a rare and ſingular virtue confers. The proudeſt of the great or ſmall *vulgar*, may be aſſured that the world will ceaſe to look upon them with reſpect, when the important queſtion is reduced ſo low as to regard only the difference between a ſtreet and a lane, and alley, or a ſquare, or when all merit is divided among two claſſes of men, thoſe who ride, and thoſe who walk. C.

DIALOGUES OF THE DEAD.

By Mr. BEATTIE*.

DIALOGUE III.

MERCURY, SOCRATES, and a MODERN PHILOSOPHER.

Mercury.—Come hither, Socrates; I wiſh to introduce you to a modern Britiſh philoſopher.

Socrates.—Although I never made great pretenſions to philoſophy myſelf, I have always reckoned the acquaintance of true philoſophers a moſt valuable acquiſition, and left the world without regret, in the hope of enjoying in theſe regions the company and converſation of the wiſe men of antiquity. Where is the perſon, pray, with whom you mean to make me acquainted?

Mercury.—Look toward the Styx. Do you ſee a tall fat man, very ſplendidly dreſt, coming this way, with a little hat under his arm? He is the philoſopher.

Socrates.—That, from his dreſs, I ſhould hardly have concluded. But I do not blame him for complying with the faſhion of his age and country, as far as might be requiſite to prevent the appearance of ſingularity. No: I ſhall love and eſteem him as a philoſopher, that is, as a friend to truth and virtue: the ſhape of his coat, or the twiſt of his periwig, do not affect my opinion. And of what ſcience has he extended the boundaries? With what new diſcovery has he enriched mankind? Or has he been ſucceſsful in illuſtrating the doctrines of morality eſtabliſhed by others? His countrymen, I am told, have of late made conſiderable advances in the knowledge of what was little known in my time, the properties of matter, and the laws of aſtronomy: has he employed himſelf in that way?

Mercury.—I know not that he has

Socrates.—He may, no doubt, have enquired into the nature of the human mind; ſtrengthened, by new arguments, the cauſe of virtue; or eſtabliſhed, on a firmer foundation, the liberties of his country?

Mercury.—I am afraid he has not enlarged the philoſophy of the human mind by new obſervations, or by the advancement of truth; nay, I doubt whether he believed that there is ſuch a thing as mind in the univerſe.

Socrates.—A geometrician, perhaps?

Mercury.—I have not heard him ſpoken of as ſuch.

Socrates.—Many ſciences may have been brought to perfection ſince I left my native planet, and much wonderful diſcovery has actually been made. Pray tell me, good Mercury, in what

* See our Magazine for March, page 169.

reſpect he has extended knowledge, or confirmed belief?

Mercury.—Truly, I am at a loſs to ſay, in what he has confirmed belief; unleſs you call a confirmation of belief his endeavours to make mankind doubt of every thing; of the exiſtence of God, of ſpirit, of matter, and even of themſelves.

Socrates.—So, I find the gentleman is only a ſceptic. That is a character, with which the world was not unacquainted in my days. But I wonder that the Britons, who have rid their country of a far leſs pernicious animal, the wolf, would ſuffer a ſceptic to burrow among them. And do you call ſuch a perſon a philoſopher, Mercury?

Mercury.—I only call him what he has been called by others. You have have had occaſion to preſcribe, before now, for ſcepticiſm; and I ſhould think it a favour, if you would purge this poor ſoul of a part at leaſt of the corruption he has brought upon himſelf. He might, perhaps, think it a favour too; for if he be not purified in that way, he muſt in another leſs agreeable. But he is almoſt come up to us. Now, my good old Grecian, arm yourſelf with all your philoſophy, ſet in order your arguments, prepare your illuſtrations, ſharpen your logical weapons; call forth the pleaſantry of your wit, the fire of your imagination, the impetuoſity of your eloquence, the keenneſs of your——

Socrates.—Softly, my friend, you know I was never diſtinguiſhed as a declaimer: I have always thought it ſufficient to convince a man, without either deafening or frightening him. I would rather allure than compel; for there is in human nature a ſtrong propenſity to reſiſt violence, and not a leſs ſtrong one to yield to gentle perſuaſion.

Mercury.—Shall I then introduce him to you as the renowned Socrates, the champion of virtue, come, not to force, but to ſooth him into the truth? Do you think that an obſtinate mind, which will not yield to a greater power, may be ſubdued by a leſs?

Socrates.—Mention neither my name nor my character. I would rather on this, as on former occaſions, appear a plain man than a philoſopher, and ſeem more to favour ſcepticiſm than to oppoſe it: for ſo he will hear me without apprehenſion or uneaſineſs; and I may give my opinion of ſome of his tenets, without being ſuſpected of any deſign either to confute or to ridicule them.

Mercury.—Well: you ſhall be obeyed. But he is here.—Great and learned ſir, I beg leave to introduce to you this friend of mine, a plain man, who pretends not to philoſophy or literature, but has with ſome attention read your eſſays.—Friend *(turning to Socrates)* this is the extraordinary perſon, whom you have ſo often expreſſed a deſire to ſee: this is the philoſopher, whoſe writings are ſo much admired in Europe, Aſia, Africa, and America; whom many read, few underſtand, and all are convinced by.

Socrates.—I am happy in being preſented to ſo great a perſon. That many read his writings, and that few underſtand them, I can readily ſuppoſe: but give me leave to doubt, whether by them any one was ever convinced.

Modern Philoſopher.—'Sdeath, ſir! nobody convinced by my philoſophical writings! What do you mean?

Socrates.—Far be it from me, ſir, to ſay that. God forbid—no, I am wrong, I aſk *your* pardon, ſir—chance forbid—pſhaw! I am wrong again. Neceſſity forbid—or nothing forbid, that I ſhould affirm any thing, or nothing, ſo poſitively. I only ſaid, that I *doubted* whether any body was ever convinced by them. And let me tell you, ſir, that you are a particular ſort of a gentleman, and that your principles very ill agree with your practice, if you do not very much doubt the ſame thing.

Mod. Philoſopher.—O, ſir, I thought you wiſhed me to talk in the language of common life. Why, philoſophically ſpeaking, you are right; I doubt whether my writings ever did con-

vince: I doubt whether they were ever publiſhed or printed: O yes, without doubt, ſir, I doubt very much——

Socrates.—But ſurely, now, that theory of yours cannot be well founded. Is it poſſible that you ſhould, with ſerious confidence, doubt whether your writings ever gave conviction, or ever appeared in print?

Modern Philoſopher.—But I tell you, ſir, that I doubt of it, with as great certainty, as I believe—no, I mean as I doubt, my own exiſtence.

Socrates.—You firmly believe that you doubt it?

Modern Philoſopher.—Yes, ſir; and any one who has read my Eſſays will firmly, if he is a real philoſopher, believe that he doubts the ſame thing.

Socrates.—And pray, do you think it more favours the principle of univerſal ſcepticiſm to believe that you doubt, than to believe that you do not doubt?

Modern Philoſopher.—I tell you, that you know nothing of the matter.—And, to be ſure I do doubt, whether my belief in my doubts be real or not. This I muſt do according to my principles: for I have ſaid, *ipſe dixi*, that a true philoſopher is doubtful of his doubts, as well as of his convictions.

Socrates.—You do not, by your principles, believe any thing, do you?

Modern Philoſopher.—By no means: as a philoſopher, I believe nothing certainly; and have ſaid, that he who believes any thing certainly, is a fool. The phraſe, you may think, has not the higheſt poliſh of Pariſian civility; but of my *friends*, not one ever objected to it.

Socrates.—You ſeemed to think, that confirmed doubt implies belief, implies your believing that you are doubtful.

Modern Philoſopher.—Yes, I allow that.

Socrates.—Then you can neither believe any thing, nor doubt any thing: as the former ſuppoſes belief directly, and the latter by implication. So that your mind can never be employed on any thought at all; for, if it were, that would imply ſomething either of belief or of doubt with reſpect to the thought, or with reſpect to the manner of your thinking it. But you allow, that doubt implies believing that you are doubtful. Therefore you cannot think without believing, and as, according to your principles, you cannot believe, ſo neither, according to your principles, can you think.

Modern Philoſopher.—I tell you, old gentleman, you know nothing of the matter; and that you are—no, that I doubt whether you are not, one of the moſt pertinacious, impertinent, ill-bred—

Mercury.—Pardon my interrupting you, good ſir. But I muſt now take the liberty to inform you, that you are ſpeaking to one nearly equal, perhaps, in philoſophy, even to yourſelf. I muſt alſo tell you, as you are a ſtranger to our cuſtoms, that it will not be for your intereſt to maintain any doctrine *here* which you do not believe: for if ſuch notions cannot be driven out by the converſation of Socrates, it may be tried whether they will reſiſt—

Modern Philoſopher.—Socrates, ſir, is a perſon for whom I muſt be underſtood to have a very great reſpect: it is faſhionable in the beſt company to ſpeak of him reſpectfully. When I was in Paris, they called me (and my friends politely re-echoed the words) *Le Socrate moderne.*

Mercury.—Very likely: but that is not to the preſent purpoſe. Proceed, if your pleaſe, in the argument with Socrates.

Modern Philoſopher.—I deny not, that from what he has ſaid, it appears plain enough, that if mind did exiſt, and could employ itſelf in thinking, the firſt principles of inveſtigation muſt be founded in belief. But as I deny the exiſtence of mind, and conſequently of thought, it is not neceſſary for me to allow, that his reaſoning affects my theory. The mind,

although it muſt believe if it think, yet, if it do not think, may as well doubt. Such is my doctrine: and I am proud to declare, that while I was on earth, there were ſome who ſtudied, and many who embraced it.

Socrates.—That I am willing to believe. Even in your own houſe I doubt not that you muſt have had many diſciples. Every chair in your parlour would have a ſmattering at leaſt of knowledge in human nature: and the table on which you wrote your Eſſays might diſcuſs a point of ſcepticiſm not much leſs accurately than yourſelf.

Modern Philoſopher.—Fie, Socrates: it is beneath the dignity of a philoſopher to talk ſo abſurdly. What a jumble of inconſiſtencies you have thrown together! Did I ever hint, or could I ever believe, that a table or chair could reaſon like myſelf; or ſuppoſe a piece of inſenſible matter to be endowed with human faculties?

Socrates.—Before I give you an anſwer, allow me to aſk you a plain queſtion with regard to *nothing*; that idea, or rather word, which you ſeem to be ſo fond of. Is it *nothing*, with reſpect to matter, for example, deſtitute of the qualities of magnitude and ſolidity, which are eſſential to matter? And, with regard to mind, is it not deſtitute of all the qualities of mind?

Modern Philoſopher.—I do not well underſtand theſe queſtions; but I admit at once, that a non-entity cannot poſſeſs qualities.

Socrates.—And what is your idea of *difference?* Would you call two things different, which both poſſeſs the ſame qualities?

Modern Philoſopher.—By no means. When two things are ſpoken of as different, it muſt be meant, that one of them poſſeſſes ſome quality which the other does not poſſeſs.

Socrates.—Well: if you and your table be different, muſt not one of the two have ſome quality or qualities that the other has not? And ſince *nothing* cannot poſſeſs any quality; and ſince both you and your table are (by your theory) nothing; neither of the two can poſſeſs any quality. So that when you deny the exiſtence of matter and ſpirit, you in fact allow, that the ſame thing, at the ſame time, does poſſeſs qualities, and does not poſſeſs qualities. And you will find, that this is not the only inſtance of ſuch abſurdity in ſceptical reaſoning: you will find, that in almoſt all the principles of your ſyſtem, as far as it is ſceptical, ſimilar contradictions are implied.

Modern Philoſopher.—There does appear to be a little abſurdity in ſuppoſing that ſpirit and matter do not exiſt; as they are evidently different, and therefore muſt poſſeſs qualities. But—

Socrates.—And you ſeemed to allow, that, if the ſoul exiſt, univerſal ſcepticiſm is impoſſible, becauſe this implies a neceſſary want of all thought; which is inconſiſtent with the nature of the ſoul.

Modern Philoſopher.—Perhaps, from what has been ſaid, the exiſtence of the ſoul, and the impoſſibility of univerſal ſcepticiſm, might appear ſufficiently certain to the common herd of mankind. But you are not aware, my good ſir, that I hold one tenet which totally deſtroys the force of every argument. I hold, that the ſenſes and the memory are fallacious; and that, by conſequence, one cannot be ſure of the reality of what one perceives or remembers: ſo that we ought not by any reaſoning to be convinced, as we are apt both to miſunderſtand and to forget it.

Socrates.—It is ſtrange if you do not ſee that, in this reſpect, your own arguments are liable to the ſame objection with thoſe of your opponents. But, paſſing this; what reaſon have you to think that the ſenſes are deceitful?

Modern Philoſopher.—Let me anſwer you by another queſtion. Have not mankind, in general, agreed to call the faculty perceiving, the object perceived, and the act of perception, by one and the ſame name?—Thereby indicating, that thoſe three are,

according to popular opinion, really the ſame thing. Now the *faculty perceiving* is in what we call the ſoul or mind; as when one ſays, my *ſight* is weak; ſo likewiſe muſt the *thing perceived* be: as when one ſays, I ſee a ſtrange *ſight*: and therefore the ſenſes give notice of no things external to the mind, but of ſuch things only as are contained by it, or within it.

Socrates.—And can you really think, that men in general, when they ſee a river or a mountain, believe it to exiſt only in their own mind? Bring me one man of common ſenſe who thinks ſo, and I ſhall ſubmit to your opinion. But you will not find, that mankind never employ the ſame word to denote things, which they believe to be totally different.—When you look at London from Highgate-hill, have you not a view of London?

Modern Philoſopher.—Yes.

Socrates.—And when you look at a perſpective repreſentation of London, have you not a *view* of London?

Modern Philoſopher.—No doubt.

Socrates.—Does it follow, that London and the perſpective repreſentation of it are the ſame thing; or that, while you have the drawing in your pocket, you have the city in your pocket too?

Modern Philoſopher.—No: I own there is ſome reaſon in what you ſay—But though I were to admit that the ſenſes are not deceitful, which no ſceptical philoſopher ever did or can admit, I muſt ſtill adhere to the fallacious nature of memory; which is alone ſufficient, to overturn every argument: for if we are not certain that the premiſes are as our memory repreſents them, how can we be ſure of our concluſion?

Socrates.—Pleaſe to anſwer me a queſtion or two. If a thouſand men were to obſerve the ſame thing at the ſame time, and every one of the thouſand, ſeparately examined, to give the ſame account of it; would it be a proof of the accuracy of their obſervation, or of its inaccuracy?

Modern Philoſopher.—Of its accuracy.

Socrates.—If a thouſand men were to remember the ſame thing with the ſame circumſtances, would it be a proof of the exactneſs, or of the deceitfulneſs, of memory?

Modern Philoſopher.—Of its exactneſs.

Socrates.—And among the many thouſands who have read and attended to hiſtory, is there, do you think, any perſon of a ſound mind, who would differ from the reſt in his remembrance of the moſt material and undiſputed events that hiſtorians record? Would any one, for example, affirm that Julius Cæſar was not ſtabbed by conſpirators, but hanged for ſheep-ſtealing: that William the firſt conquered, not England, but New Zealand: that the Romans bombarded Carthage with two and forty-pounders; and that Scipio ſhot Hannibal with a rifle-barrel gun, as he was getting into an air balloon? And if the memories of men were fallacious, and of courſe conſtantly changing, could their remembrances of the events of hiſtory ſo exactly coincide?

Modern Philoſopher.—Socrates, I will hear you no longer: your arguments become troubleſome; and if you perſiſt in this unphiloſophical way of reaſoning, we muſt part.

Mercury.—Perhaps you will not find it ſo eaſy, as you may imagine, to get out of the reach of Socrates and common-ſenſe. Remember where you are: Paris and Verſailles are a great way off. Believe me, it will be for your intereſt here, whatever it might have been in the world you have left, to liſten to the truth, and to yield when you are convinced by it. Obſtinacy and ſcepticiſm are of no account in theſe regions.

Modern Philoſopher.—This matter I find begins to grow ſomewhat ſerious. If you oblige me to ſay what I think, I fear I muſt give up the deceitfulneſs of memory as well as of ſenſe.

Socrates.—Take the trouble to recollect what has been ſaid in this converſation, and has received your aſſent. We have ſeen that neither the ſenſes nor the memory can with any propriety be called fallacious; and that therefore every argument which reaſon approved, and continued to approve, may be reckoned a juſt one. You allowed, that ſpirit and matter are poſſeſſed of qualities, and conſequently of exiſtence; and that, the exiſtence of mind being admitted, univerſal ſcepticiſm is impoſſible.

Modern Philoſopher.—Your arguments ſeem to have ſome hing in them. And I own I was ſorry to ſee your doctrine advanced, to the detriment both of my fame and of my bookſeller, even before I left the other world.

Socrates.—You left the other world! I will undertake to prove, according to your own mode of reaſoning, that you are there ſtill.

Modern Philoſopher.—I heartily wiſh you could. How would you prove that, pray?

Socrates.—I could prove it, from the conſideration that you are at preſent in the ſhades below.

Modern Philoſopher.—You have certainly not only forgotton your philoſophy, old gentleman, but loſt your wits. Why, that would be proving a propoſition from a principle directly contradictory to it.

Socrates.—And is this contradiction more glaring than to deduce *univerſal ſcepticiſm* from any principle of *belief* whatever. Let the principle be what it will, either that ſpirit and matter do, or do not, exiſt; ſtill belief is implied: and to prove, from a principle believed, that we can believe nothing, is not in my opinion leſs ridiculous, than to prove that you are in the other world, becauſe you are in this. You allowed, that ſpirit and matter have exiſtence, and that conſequently univerſal ſcepticiſm is impoſſible: you now ſee, that this muſt be thought an impoſſibility, even by one who could be mad enough to believe that ſpirit and matter do not exiſt.

Modern Philoſopher.—I fear my ſyſtem muſt fall to pieces. But is it not pity to overturn a ſcheme ſo friendly to the elegancies of faſhionable life, and which renders the mind of man ſo light and eaſy, by relieving it from all apprehenſions of future exiſtence?

Socrates.—You ſtill forget where you are: you cannot, it ſeems, even in this world, keep clear of the licentious jargon to which you were ſo long accuſtomed in the other. As to the tendency of your doctrines, and of the inferences that may be fairly drawn from them, no perſon capable of ſerious thought can for a moment believe them to be beneficial to mankind: you yourſelf will be of this opinion ſoon, if you are not ſo already. All love to God, to our neighbour, and even to ourſelves, they would extinguiſh; for who can love that which he does not believe to exiſt? From no ſort of wickedneſs, that man may wiſh to commit, would they deter: for they teach, that reaſon ought to be the ſervant, or rather the ſlave, of paſſion; and that the impulſes of paſſion, being the neceſſary effects of neceſſary cauſes, are irreſiſtible, and therefore need not be reſiſted; that there is no good reaſon for diſtinguiſhing moral virtue from intellectual ability: in other words, that men are under no ſtronger obligations to be juſt than to be eloquent, and that to have a weak memory is as bad a thing as to pick a pocket. But I ſcorn to enter into the detail of your paradoxes. I ſhall only ſay, that they are not adapted to the head or heart of any one who is not both a profligate and a fool: and that you, by endeavouring to ſubvert every thing that has been believed concerning *mind*, have done ſuch a ſervice to philoſophy, as a prince would do to his people in attempting to deſtroy all the reſtraints of government, and, conſequently, all the protection.

ORIGINAL LETTER *of Dr.* JOHNSON, *on his* WIFE'S DEATH.

Not publiſhed in his Works, nor in any Life of him.

[Communicated by Dr. Faulkner, of Bath.]

March 17, 1752. O. S.

DEAR SIR,

NOTWITHSTANDING the warnings of philoſophers, and the daily examples of loſſes and misfortunes, which life forces upon us, ſuch is the abſorption of our thoughts in the buſineſs of the preſent day—ſuch the reſignation of our reaſon to empty hopes of future felicity, or ſuch our unwillingneſs to foreſee what we dread, that every calamity comes ſuddenly upon us, and not only preſſes as a burden, but cruſhes as a blow.

There are evils which happen out of the common courſe of nature, againſt which it is no reproach not to be provided. A flaſh of lightening intercepts the traveller in his way. The concuſſion of an earthquake heaps the ruins of cities upon their inhabitants. But other miſeries time brings, though ſilently, yet viſibly forward, by its own lapſe, which yet approaches *unſeen*, becauſe we turn our eyes away, and they ſeize us unreſiſted, becauſe we would not arm ourſelves againſt them, by ſetting them before us.

That it is in vain to ſhrink from what cannot be avoided, and to hide that from ourſelves which muſt ſometimes be found, is a truth which we all know, but which all neglect, and perhaps none more than the ſpeculative reaſoner, whoſe thoughts are always from home, whoſe eye wanders over life, whoſe fancy dances after meteors of happineſs kindled by itſelf, and who examines every thing rather than his own ſtate.

Nothing is more evident, than that the decays of age muſt terminate in death. Yet there is no man (ſays Tully) who does not believe that he may yet live another year, and there is none who does not, upon the ſame principle, hope another year for his parent or his friend; but the fallacy will be in time detected; the laſt year, the laſt day, will come: it has come, and is paſt—'The life which made my own life pleaſant is at an end, and the gates of death are ſhut upon my proſpects.'

The loſs of a friend, on whom the heart was fixed, to whom every wiſh and endeavour tended, is a ſtate of deſolation in which the mind looks abroad impatient of itſelf, and finds nothing but emptineſs and horror. The blameleſs life, the artleſs tenderneſs, the native ſimplicity, the modeſt reſignation—the patient ſickneſs and the quiet death, are remembered only to add value to the loſs—to aggravate regret for what cannot be amended—to deepen ſorrow for what cannot be recalled.

Theſe are the calamities by which Providence gradually diſengages us from the love of life. Other evils fortitude may repel, or hope may mitigate; but irreparable privation leaves nothing to exerciſe reſolution, or flatter expectation. The dead cannot return, and nothing is left us here but languiſhment and grief.

Yet ſuch is the courſe of nature, that whoever lives long muſt outlive thoſe whom he loves and honours. Such is the condition of our preſent exiſtence, that life muſt one time loſe its aſſociations, and every inhabitant of the earth muſt walk downward to the grave alone and unregarded, without any partner of his joy or grief, without any intereſted witneſs of his misfortunes or ſucceſs. Misfortunes indeed he may yet feel, for where is the bottom of the miſery of man! but what is ſucceſs to him, who has none to enjoy it? Happineſs is not found in ſelf-contemplation; it is perceived only when it is reflected from another.

We know little of the ſtate of de-

parted ſouls, becauſe ſuch knowledge is not neceſſary to a good life. Reaſon deſerts us at the brink of the grave, and gives no farther intelligence. Revelation is not wholly ſilent. 'There is joy among the angels in heaven over a ſinner that repenteth.' And ſurely the joy is not incommunicable to ſouls diſentangled from the body, and made like angels.

Let hope, therefore, dictate what revelation does not confute—that the union of ſouls may ſtill remain; and that we, who are ſtruggling with ſin, ſorrow, and infirmities, may have one part in the attention and kindneſs of thoſe who have finiſhed their courſe, and are now receiving the reward.

Theſe are the great occaſions which force the mind to take refuge in religion. When we have no help in ourſelves, what can remain but that we look up to a higher and greater power? And to what hope may we not raiſe our eyes and hearts, when we conſider that the *greateſt power is the beſt?*

Surely there is no man who, thus afflicted, does not ſeek ſuccour in the goſpel, which has brought life and immortality to light! The precepts of Epicurus, which teach us to endure what the laws of the univerſe make neceſſary, may ſilence, but not content us. The dictates of Zeno, who commands us to look with indifference on abſtract things, may diſpoſe us to conceal our ſorrow, but cannot aſſuage it. Real alleviation of the loſs of friends, and rational tranquillity in the proſpect of our own diſſolution, can be received only from the promiſe of him in whoſe hands are life and death, and from the aſſurances of another and better ſtate, in which all tears will be wiped from our eyes, and the whole ſoul ſhall be filled with joy. Philoſophy may infuſe ſtubbornneſs, but religion only can give patience.

SAM. JOHNSON.

ON FALLEN GRANDEUR.

——Tantumne eſt ab re tua otii tibi
Aliena ut cures, eaque nihil quæ ad te attinent. TER.

THE awful and important revolutions, which have taken place within a very few years, have been ſo ſudden in their approach, and ſo complete in their nature, that mankind have probably not yet ſo ſufficiently recovered from the ſurpriſe, as to contemplate them in all the variety of lights which they preſent. They have far exceeded all human calculation, and men were not conſequently prepared to receive them. To politicians and economiſts may be left the arduous taſk of eſtimating their effects upon governments and laws. To the Chriſtian, they afford matter of reflection more intimately connected with his belief and his happineſs.

The chief leſſon to be derived from a contemplation of late events, namely, the uncertainty of human happineſs and grandeur, is certainly not new. But ſeldom, if the page of hiſtory may be credited, was it ever illuſtrated by more ſtriking examples. We have ſeen the tranſition from a throne to a ſcaffold, at once ſudden and ſhocking; no leſs ſuddenly have thouſands been precipitated from rank, power, authority, and wealth, to poverty, contempt, and the precarious bounty of a foreign land. If thoſe examples are conſidered as mere matters of courſe, as events to intereſt the curioſity for a time, and as deſerving of no permanent record in our memory, we have not learned to profit by the diſpenſations of Providence, and reaſon and revelation have been given to us in vain.

The leſſon afforded, indeed, by theſe awful events, concerns not the great bulk of mankind ſo much as it does the favourites of fortune, and

the poſſeſſors of authority. But all men are in a certain degree tinctured with pride, ambition, and ſelfiſh paſſions. All men are deſirous of power, anxious to increaſe it, and generally apt to abuſe it. All men are apt to depend on themſelves, and to overlook the calamities which may, in a moment, confound their devices, and level them with the objects of their contempt. None therefore are unconcerned in the leſſon which fallen greatneſs affords; none are exempt from the ſame unforeſeen ſtroke which annihilated the power of ages, and has ſent ancient, honourable, and opulent families, to become miſerable wanderers in the earth, without friends, reſpect, or veneration.

When we conſider theſe things, the concluſion is obviouſly in favour of thoſe virtues, which alone can ſecure a ſtate of comparative happineſs, and of thoſe reflections which lead our minds to the ſource of all happineſs and comfort. Humility, benevolence, charity, and mutual forbearance, are ennobled by the conſideration that the oppoſite vices aggravate calamity and exaſperate remorſe. Wild and enthuſiaſtic as the populace of a neighbouring nation have been in overturning rank, and diſpoſſeſſing the wealthy, it may be believed that had the general conduct of the latter been conſonant to the precepts of Chriſtianity, and the practice of the Chriſtian virtues, either their perſons and property would have been reſpected, or their fall from wealth to poverty, from diſtinction to diſreſpect, would have been gentle. No corroding reflections upon their own guilt, no hopeleſs retroſpect of former miſconduct, would have aggravated the diſgrace of their fall. That ſome of the number may derive conſolation from a review of their former lives, and may demand with confidence an appeal to paſt ſervices, is, I hope, true. But no leſs true will it be found, that the greater part have no other comfort remaining than what may be wrung from the effervescence of unconquerable pride, and the impotency of deſpair.

No diſpenſation of Providence ſpeaks to one alone. Far as we may be removed from the evils we deplore, they are not to be viewed by us, as what concerns others only. The firſt effuſions of ſympathetic regret being over, they preſent us with views of Providence, which are conſolatory and inſtructive. They wean us from a fond deſire, and longing after periſhable objects; they correct our pride, moderate our ambition, and curb thoſe paſſions, which have been too often indulged at the expence of the happineſs of our fellow-creatures. We have ſeen a proof of the uncertainty of all human things, ſo wonderfully ſtriking, that it would be unpardonable, if this conſideration did not accompany us in all our tranſactions. How wretchedly contemptible does the proud confidence of an oppreſſor *now* appear!

From an object ſo diſguſting, and if reaſon had fair play, ſo uncommon, let us turn to the more agreeable proſpects, which are afforded by the hopes and conſolations of religion—of that religion, the whole ſyſtem and deſign of which is illuſtrated and confirmed by the events now paſſing in the world. In that ſyſtem, we ſhall find that nothing has happened which may not be turned to the moſt uſeful purpoſe; that the viſitation of calamity is beneficial, and that pride was not made for man. While it reſtrains thoſe paſſions, which even in this world are the ſource of miſery and diſappointment, diſgrace and contempt, it intermeddles not with the free and honeſt uſe of the means of comfort, nor with the innocent pleaſures of life. Reflections on the ſhortneſs and uncertainty of happineſs, or of human affairs, are improper, if they are gloomy, and derogatory to the wiſdom of Providence, if they lead not to higher objects and more certain conſolations. Whatever the deſign of Providence may be in the diſpoſal of the forms and modes of governments

in nations, which yet we may be aſſured, will ultimately be for the beſt, we ought, in the mean time, to learn the vaſt importance of poſſeſſing right principles, and a conſiſtent conduct. This, in the worſt of times, will blunt the edge of calamity, relieve the burden of the moſt troubled mind, and enable us to meet a reverſe of fortune, without fear or amazement. In the preſent ſtate of things, the man who neglects this important duty, whoſe pride has received no check, whoſe ambition is ſtill unmoved, and whoſe unbelief in the uncertainty of human grandeur is ſtill unſhaken, may be ranked among thoſe who have few pretenſions to the character of a rational creature, and of whom it has been ſaid, *Quem Deus vult perdere, prius dementat.*

D. E.

MISCELLANEOUS ANECDOTES.

Auctioneers.

THE very refined and figurative language of this claſs of authors, has been admirably ridiculed in the firſt act of Mr. Sheridan's Critic. The following deſcription of a camp, ſaid to be written by one of theſe *deſcriptive* gentlemen, may anſwer the ſame purpoſe. In a letter to his friend, he ſays,

'I am on a tour of pleaſure, and have juſt been indulged with a ſurvey of the Wincheſter camp, which is ſeated in a ſtyle moſt ſtrikingly ſuperb and delightful. In the front is a variegated and extenſive landſcape, enriched with an expanſe of the moſt rural meadows and exuberant paſtures, luxuriantly watered with cryſtal ſerpentine rivulets, and ſolemnly terminated by the lofty turrets of a venerable cathedral; and the ſhell of a royal palace, one of the nobleſt monuments of antique architecture. On either ſide is the verdant carpet of Downs, interſperſed with ſheep, the baſis and pride of the Britiſh manufacture; together with intermingled accompaniments of corn fields, now in the richeſt verdure imaginable, but ominous of future harveſts. The camp colours, compoſed of ſundry ſilks waving with the gentleſt zephyrs, and the numerous ſtands of arms agreeably and taſtefully arranged, and glittering with the reverberated luſtre of the meridian ſun, have the moſt pleaſing effect. Meanwhile, the formidable horrors of the artillery, awfully and happily contraſt the ſofter exhibitions of elegance and ſplendour. Innumerable bodies of men exerciſing at due diſtance, decorate the circumambient ground with animating and dazzling groups. The marquees, and pavilions of the ſeveral colonels, the flower of our nobility, are finiſhed with unrivalled taſte, and ornamentally furniſhed with the moſt fanciful feſtoon curtains! rich cabriolet chairs, Chineſe ſofas, and other highly finiſhed articles of the neweſt patterns. The whole is an unparalleled and matchleſs ſcene of martial beauty and grandeur, elevating the ſoul to ſentiments of the moſt heroic ardour, and productive of the moſt capital ſenſations.'

Attornies.

Monſ. Balzac tells us, that in a valley near the Pyreneans, two leagues broad and five long, the inhabitants had from time immemorial lived in the moſt perfect friendſhip, when their ill fortune brought an attorney to live among them. Theſe people, who before then never knew what a lawſuit meant, immediately fell together by the ears—nothing was heard of but proceſſes and appeals to the parliament of Toulouſe.

When they had thus torn each other to pieces, and ſpent all their money, they began to conſider what could occaſion this wonderful change. They unanimouſly agreed it muſt originate in the lawyer, and conſidering him as the ſource of all their misfortunes, they roſe, drove the harpy out of the

country, and the priſtine tranquillity of the valley was entirely reſtored.

Lord Ashburton.

When Mr. Dunning, afterward lord Aſhburton, by his eminently diſtinguiſhed talents at the bar, was in the receipt of *eight thouſand per annum*, he requeſted his mother, a plain, but worthy old lady, to favour him with a viſit in London. During her ſtay in town, he gave a dinner to about a dozen of his friends: the company, and particularly her ſon, treated her with the utmoſt reſpect and attention; but their politeneſs could not overcome her uneaſineſs, for her ſon's ſuppoſed extravagance. Very ſoon after dinner ſhe retired, and ſent a private meſſage to Mr. Dunning, deſiring to ſpeak to him: when he came into her room, ſhe thus addreſſed him:

'John, ſince I have been here, I have ſeen, with great concern, your manner of going on; when you and I have dined by ourſelves, you have had three or four diſhes, but although I thought it very wrong, I ſaid nothing. To day your profuſion is ſo much beyond all bounds, that I can contain myſelf no longer, and I muſt inform you, John, if I ſee the like of this again, I ſhall go back into the country immediately, for it is impoſſible you can afford to live in this manner; and I will not ſtay here to be a witneſs of prodigality, which will certainly bring you to beggary.'

The matchleſs eloquence of the ſon was employed in vain to convince his mother her fears were groundleſs, and ſhe quitted London, fully perſuaded, in her own mind, that John was in the high road to ruin.

Change of Fashions.

The aptitude which mankind, individually and collectively, diſplay to change from one extreme to the other, was never more forcibly exemplified than in the levelling ſyſtem now attempted to be eſtabliſhed in France, where rank was formerly ſo nice and faſtidious, that even the practice of the learned profeſſions was an invincible bar to an admiſſion, into what is uſually called, good company.

When the celebrated ſurgeon, Mr. Samuel Sharpe, who died ſome years ago, at Bath, retired from practice, he made the tour of France and Italy, accompanied by his daughter, and reſided for ſome time in Paris, where he was deſired, by the Britiſh ambaſſador, to give his opinion on the caſe of a young lady, the only daughter of one of the firſt families in France, who had long laboured under a malady which the French ſurgeons pronounced incurable. Reſpect for the miniſter, induced Mr. Sharpe to viſit the patient, who, under his direction, perfectly recovered. The heart of the mother overflowing with gratitude for the recovery of her child, ſhe begged to be informed in what manner ſhe could recompenſe his kindneſs, as he no longer took fees, at the ſame time hinting, that if he had any favour to ſolicit at court, the intereſt of her family would enſure him ſucceſs. Mr. Sharpe told her, that he meant to ſtay the winter in Paris, and that if ſhe would do him and his daughter the honour to admit them to her aſſemblies, he ſhould deem himſelf overpaid—'Sir,' ſaid the lady, after a pauſe of ſome minutes, 'I am extremely ſorry that you ſhould have aſked the only thing that I am unable to do for you, for, whatever may be my own opinion, if I were to attempt to introduce you, I ſhould be inſtantly deſerted by all my acquaintance.'

Dr. Johnson.

The following anecdote of him has eſcaped all his biographers. As a perſon was ſhewing the doctor the caſtle of Edinburgh, he mentioned to him a tradition, that ſome part of it had been ſtanding 300 years before Chriſt. 'Much faith,' replied the doctor, in his uſual manner, 'is due to tradition; and that part of the building which was ſtanding at ſo early a period, muſt undoubtedly have been the rock upon which it is built!'

CARLINI.

Carlini, the celebrated Harlequin of the Italian comedy at Paris, became hypochondriacal, and conſulted M. Tronchin, the phyſician, about his complaint. 'You want amuſement, my good friend (ſaid Tronchin to him) go, and ſee Carlini, he will make you laugh, and will do you more good than any thing I can preſcribe for you.'—'Alas, ſir,' ſaid the patient, 'I myſelf *am Carlini!*'

THE TURF.

The great attention that country gentlemen pay to the breed of their horſes and dogs, and the little regard they have to any thing, except property, in the marriages of their ſons and daughters, has been often remarked. A claſſic of the ſtable, who has lately written a pamphlet, with accurate pedigrees of all the eminent ſtallions and brood mares in the kingdom, and who may very properly be called the *Rouge Dragon* of Newmarket, introduces his book by the following pompous preface.

'To reſcue the turf from the encreaſing evil of falſe pedigrees, has long been the wiſh of its moſt noble and zealous ſupporters; to effect ſo deſireable a purpoſe, it will be found neceſſary to bring together a *well authenticated* collection of pedigrees of the moſt noted horſes and mares, from the earlieſt periods; but ſo many difficulties occur in the proſecution of ſuch a deſign, that the public wiſh ſtill remains ungratified, and almoſt unattempted. A gentleman of Staffordſhire, a few years ago, attempted a work of this nature on a very extenſive plan, and it is much to be regretted that he did not live to complete what there is reaſon to believe he had ſo ably begun, &c.'

PUGH, THE PAINTER.

We were lately told that a white partridge had been ſeen in the neighbourhood of London, and that it is the firſt that ever was ſeen in this kingdom. This is a miſtake, for one was ſhot by the marquis of Lothian's gamekeeper ſome years ago; and about the year 1765, the late Mr. Pugh, the painter, had one ſent him from Shropſhire, to make the portrait of it. Mr. Pugh was a painter, and a tolerable good painter, but he was no ſportſman; he accordingly painted a large oak, and ingeniouſly painted the white partridge as perched on one of the branches. When told that partridges always ſat on the ground, he ſaid, 'that might be, but it looked ſo much more picturesque to have a landſcape in the back ground, and that he could not alter it; for an extraordinary bird ought to have an extraordinary ſituation; it exhalted him above his fellows.'

ON LOTTERIES.

[From an old anonymous French Writer.]

YOU have heard me frequently warm in my cenſures of lotteries, and I really thought I ſhould never have been drawn in again; yet that very lately has been my caſe, and would have been even yours, in the like circumſtances: I have the happineſs of being a member of a ſociety where amuſements are improved into utility; and laſt week a motion was made for a kind of lottery, in which each ticket aſſigned a ſubject to be treated in writing by the perſon who drew it. That which fell to me demanded a ſolution to the following queſtion: which was moſt eligible, to have conſtantly every day a dream of ſixteen hours, made up of imaginary happineſs, and the eight waking hours to live in real wretchedneſs; or to be wretched in the dreaming hours, and happy in the hours of real life?

This was to be handled ſo as to entertain perſons of a delicate turn of

mind and eminent goodneſs of heart, therefore to render it ſuſceptible of ornament, I have ſuppoſed the two conditions to have been realized in me, and that I experienced them both: the reſult of which was, to delineate ſuch a happineſs as the wiſe and virtuous man would chooſe, were it within his reach; contraſting it with a condition, which, though too common, is not the leſs miſerable. I ſend you the eſſay itſelf, as delivered to this ſociety.

I was ſinking into a welcome repoſe, when the god of ſleep, in a car of thick clouds, making his way through the darkneſs of the night, deſcended toward me; the dreams were in his retinue, and waited his orders: 'Collect,' ſaid he, to them, 'all your illuſions, and form an exquiſite happineſs of ſixteen hours, which this mortal, now under my influence, is to enjoy.' He ſpoke, and ſprinkling me with a branch dipped in the waters of Lethe, a ſomnolence diffuſed itſelf through my whole frame; the paſt diſappears, and I find myſelf in a ſituation which to me ſeemed full of delight. A moderate income fully anſwered all my deſires; Hymen had bleſſed me in the lovely and virtuous Pulcheria, the object of all my tenderneſs, as I was of hers; her diſcourſe was melting as muſic to me; I conſulted her in all my concerns, and her participation of them improved all my pleaſures; we gave ourſelves up to none which are mingled with diſquietneſs and followed by remorſe; we ſquared our wiſhes by our abilities, and freely gratified them, they being all connected by reaſon. A reputable ſociety, whoſe wit was without ſelfiſhneſs or impiety, was an inexhauſtible ſource of varied amuſements; elegance, if not profuſion, directed our table, which never failed to be enlivened by a decent hilarity; a lively repartee and ingenious ſally were well received; but the poignancy of ſatire was exploded, eſpecially the coarſe double-entendre, or infamous ribaldry, met with no quarter. We reduced the ſportive talents to their true uſe, as relaxations after the fatigue of buſineſs, or the intenſeneſs of ſtudy; never ſuffering them to be exerciſed by paſſions, dangerous to our own virtue or the tranquillity of another. Our converſations never aimed at any high flights, and were as much above futility; we all broke up with cheerful minds and warmed hearts, for vice was never mentioned but with contempt, and virtue with reverence. Had any one begun to talk of dogs, horſes, balls, or actreſſes, it would have been intimated to him, that he forgot himſelf. Our manſion was not an overgrown place, but a convenient houſe adapted for uſe and delight: it was at ſuch a proper diſtance from tumult as not to be a lonely ſolitude; the apartments were not large, nor the furniture rich, but in neatneſs and contrivance nothing could exceed them. It was, beſides, environed with gardens, which offered an infinitude of ſightly objects to the eye, though the ſimplicity of nature ſuffered but little from any variegated decorations.

This happy condition did not ſeem any thing of a novelty. I thought it was natural to me, and enjoyed it without apprehenſion of its tranſitorineſs; but this delightful imagery was diſſipated, and my awakening put an end to the ideal happineſs, with which I fed myſelf in my dream. Then, without any interval, the view was ſhifted from eaſe to anxiety: a quick ſenſe of my wants returned upon me, without any proſpect of means to ſatisfy them. I was under the moſt painful reſtraints, bound perpetually to do the will of others; every portion of my life was taken up in employments diſguſtful to my mind, and above the ſtrength of my body. If I had any ſnatch of pleaſures, they wanted that communication wherein all their ſweetneſs conſiſts: if to obviate the uneaſineſs of preſent impreſſions, I looked forward to futurity, that alſo preſented nothing to me but ſubjects of vexation and grief. My

real miſeries were aggravated by an unhappy turn of mind; and by the force of a melancholy imagination, the calamities that I dreaded were more excruciating than the preſent; theſe convulſions were further encreaſed by an ardent tendency to whatever had the appearance of relief and pleaſure. I had not even ſo much as a ſingle friend to whom I could communicate my diſtreſſes, or from whom I could expect any comfort. Alas! who, under misfortunes, can expect to meet with conſtant friends! What a difference is there between the two conditions which I have deſcribed!

Let us now ſuppoſe that the dreams, fraught with ſo much felicity, were to be renewed every night, and as invariably followed by eight hours of real life, attended with theſe conſtraints, pains, and ſufferings; it is aſked, whether this condition be juſtly preferable to that wherein the dream was to be afflictive, and the waking hours filled with happineſs, which, according to the hypotheſis, would be real?

This queſtion, which ever way it be decided, does not infer any increaſe of our happineſs, ſince that on which it is grounded labours under a natural impoſſibility. However, being obliged to deliver my opinion of the choice, I ſay, that imaginary goods, however ſtrongly they may affect us, are by no means to be put in competition with the real; the uſe which we make of the former terminates in the dream, and nobody elſe is the better for our happy circumſtances. Now, the pleaſure of obliging is with every reaſonable man a capital article in his ſcheme of happineſs; to make others happy is to be happy ourſelves; ſo that I would hope, that perſon is not living who would prefer a condition, of which all the advantages would concenter and terminate in himſelf alone, while another was within his choice, in which it would be in his power to do kind offices to his fellow-creatures, and promote the laſting happineſs of ſociety.

An Account of ſome wonderful natural CURIOSITIES *in* Carniola; *particularly of the* LAKE *of* Cirknitz, *and the Quickſilver Mines.*

IN Carniola, which is a duchy of Germany, in the circle of Auſtria, is the celebrated Lake of Cirknitz, which takes its name from the neighbouring market-town. It is one German mile in length from north to ſouth, half a German mile in breadth, and from one to two, three, and four fathoms deep; but ſome of the pits are many fathoms deep. In this lake are three beautiful iſlands covered with trees: theſe iſlands are called Vornec, Velh Goriza, and Mala Goriza. A peninſula alſo runs into it, and is ſeparated from the iſland of Vornec by a canal. There are many holes or pits in the lake, with long ditches like canals; and it receives the waters of eight brooks.

It is a common ſaying, that in this lake a perſon may ſow and reap, hunt and fiſh, within the ſpace of a year; but this is the leaſt remarkable circumſtance in it, and no more than what may be ſaid of almoſt any other ſpot that is overflowed in winter or ſpring. The moſt wonderful circumſtance is its ebbing and flowing. The former always happens in a long drought, when it runs off through eighteen holes at the bottom, which form ſo many eddies or whirlpools. Baron Valvaſor mentions a ſingular way of fiſhing in one of theſe holes, called Ribeſcajama: he ſays, that when the water is entirely run off into its ſubterraneous reſervoirs, the peaſants venture with lights into that cavity, which is in a hard rock, three or four fathoms under ground, to a ſolid bottom; whence the water running through ſmall holes, as through a ſieve, the fiſh are left behind, caught, as it were, in a net provided by nature.

At the firſt appearance of its ebbing,

a bell is rung at Cirknitz, upon which all the peaſants in the neighbouring villages prepare, with the utmoſt diligence, for fiſhing; for the greateſt part of the fiſh generally go off at the beginning of the ebb, and ſeldom ſtay till the water is conſiderably decreaſed. Above a hundred peaſants never fail to exert themſelves on this occaſion, and both men and women run promiſcuouſly into the lake, ſtripped quite naked, although both the magiſtrates and the clergy have uſed their utmoſt endeavours to ſuppreſs this improper cuſtom, particularly on account of the young lay brothers of a neighbouring convent, who have the privilege of fiſhing there; and, notwithſtanding the prohibitions of the fathers, leave the convent in order to ſee this uncommon ſcene. The peaſants, however, are not obſerved to be guilty of more indecency at theſe times than at others, when they are clothed. At theſe ebbings, an incredible number of pike, trout, tench, eels, carp, perch, &c. are caught in the lake, and what are not conſumed, or diſpoſed of while freſh, are dried by the fire.

Though every part of the lake is left dry, two or three pools excepted, yet, Mr. Keyſler ſays, immediately on the return of the water, it abounds in fiſh as much as it did before; and the fiſh that return with the water are of a very large ſize, particularly pikes weighing fifty or ſixty pounds. It is alſo remarkable, that when it begins to rain hard, three of the cavities ſpout up water to the height of two or three fathoms; and if the rain continues, and is accompanied with violent thunder, the water bubbles out of all the holes through which it had been abſorbed, two of them excepted, and the whole lake is again filled with water in twenty-four, and often in eighteen hours. Sometimes, not only fiſh, but live ducks with graſs and fiſh in their ſtomachs, have emerged out of theſe cavities. The abbé Fortis has deſcribed a lake, poſſeſſing the like remarkable quality, in Dalmatia.

In a rock on one ſide of this lake, but conſiderably higher than its ſurface, are two caverns, at ſome diſtance from each other; and, when it thunders, the water guſhes out of both, with great noiſe and impetuoſity. If this happens in autumn, they alſo eject a great many ducks, which are blind, very fat, and of a black colour; and, though they are, at firſt, almoſt bare of feathers, in a fortnight's time, or, at furtheſt, before the end of October, they are entirely fledged, recover their ſight, and fly away. Each of theſe caverns is ſix feet high and as many broad; and when the water guſhes out of them, it is in a large column of the ſame dimenſions, and in a continual ſtream. There is a paſſage in each of theſe caverns, where a man may walk upright a conſiderable way; but it is ſaid, that no perſon has ever yet ventured into them, to ſearch into the nature of the inner caves and reſervoir to which theſe apertures lead; for there is no certainty but that, in an inſtant, he may be ſurpriſed by the water ruſhing upon him, with the force and rapidity of a fire-engine. Something very ſimilar to this is likewiſe related by the abbé Fortis, in his account of Dalmatia.

When the lake ebbs early in the year, within twenty days time graſs grows upon it, which is mowed down, and the bottom afterward ſowed with millet: but if the water does not run off early, nothing can be ſown; and if it ſoon returns, as it ſometimes does, the ſeed is loſt: otherwiſe, after the millet harveſt, all manner of game is hunted and ſhot in it.

Adlerſberg is a market-town of Inner Carniola, ſituate at the foot of a high rocky mountain, on which ſtands a citadel. About half way up the acclivity of this mountain, is the entrance into a large cavern, that is divided into a great number of ſubterraneous paſſages. The eye is here delighted with viewing a great number of ſparry icicles, formed on the arched roof of this vaſt cavern, by the exudations of a lapideous or pe-

trifying fluid, which form the moſt beautiful decorations. The ſides are covered with all kinds of figures, formed by the ſame exudations, to which the imagination of the ſpectator gives various forms never intended by nature; ſo that it is not at all ſtrange that ſome people ſhould make out dragons, heads of horſes, tygers, and other animals. Several pillars, which are to be ſeen on each ſide, proceed from the droppings of the petrifying fluid from the top, which form a kind of ſparry pillar on the bottom of the cave: this gradually increaſes, till, at laſt, it joins the icicle at the top, by meeting it about half-way, and thus a complete pillar is formed. If a perſon's curioſity will carry him ſo far, he may rove about two German miles in the ſubterraneous paſſages of this cavern. The preſent earl of Briſtol (biſhop of Derry) viſited a ſimilar cavern in Dalmatia, in company with the abbé Fortis.

It is remarkable, that the river Poig, which riſes in this mountain, about four Engliſh miles from Adlerſberg, runs again to it with an inverted courſe, and loſes itſelf near the entrance of the cavern, falling by a great depth into the rock, as is evident from its roaring noiſe, and the ſound cauſed by flinging a ſtone into the hole. The ſame river appears again near Planina; but, ſoon after, it loſes itſelf a ſecond time in a rock, and at length emerges a third time, when it aſſumes the name of the Laubach, at the town of that name.

About two German miles from Adlerſberg, is another remarkable cavern, called St. Magdalen's Cave. The way to it being covered with ſtones and buſhes, is extremely troubleſome; but the great fatigue in going is compenſated by the ſatisfaction of ſeeing ſuch an extraordinary cavern. You firſt deſcend into a hole, where the earth ſeems to have fallen in for ten paces before you reach the entrance, which reſembles a fiſſure in a huge rock cauſed by an earthquake. Here the torches are always lighted to conduct travellers; for the cave is extremely dark. This wonderful cavern ſeems as if divided into ſeveral large halls, and other apartments. The vaſt number of pillars with which it is ornamented by nature, give it a ſuperb appearance, and are extremely beautiful, for they are as white as ſnow, and have a kind of tranſparent luſtre, not unlike that of white ſugar-candy. The bottom is of the ſame materials, ſo that a perſon may imagine he is walking among the ruins of ſome ſtately palace, amid noble pillars and columns, partly mutilated and partly entire. From the top ſparry icicles are ſeen every where ſuſpended, in ſome places reſembling wax tapers, which, from their radiant whiteneſs, appear extremely beautiful. All the inconvenience here ariſes from the inequality of the bottom, which may make the ſpectator ſtumble, while he is viewing the beauties above and around him.

At Idria, a ſmall town in this part of Carniola, ſeated in a deep valley, amid high mountains, on the banks of the river Idria, are the celebrated quickſilver mines diſcovered in 1497. Before that time, this part of the country was inhabited only by a few coopers and other artificers in wood; but, one evening, a cooper having placed a new tub under a dropping ſpring, in order to try whether it would hold water, when he came, in the morning, to take the tub away, found it ſo heavy, that he could hardly move it. At firſt, the ſuperſtitious notions that are apt to poſſeſs the minds of the ignorant made him ſuſpect that his tub was bewitched; but, at laſt, perceiving a ſhining fluid at the bottom, and not knowing what to make of it, he went to Laubach, where he ſhewed it to an apothecary, who being an artful man, diſmiſſed him with a ſmall preſent, and deſired him to bring ſome more of the ſame fluid whenever he could meet with it. This the cooper frequently did, being highly pleaſed with his good luck; but the affair being at laſt made pub-

ſie, ſeveral perſons formed themſelves into a ſociety, in order to ſearch further into the quickſilver mine. In their poſſeſſion it continued, till Charles duke of Auſtria, perceiving the great importance of ſuch a work, gave them a ſum of money, as a compenſation for the expences they had incurred, and took it into his own hands.

The ſubterraneous paſſages of the mine are ſo extenſive, that it would take up ſeveral hours to go through them. The greateſt perpendicular depth, including from the entrance of the ſhaft, is 840 feet; but as they advance horizontally under a high mountain, the depth would be much greater if meaſured from the ſurface of the hill. One way of deſcending the ſhaft is by a bucket; but, as the entrance is narrow, the bucket is liable to ſtrike againſt the ſides, or to be ſtopped by ſomething in the way, ſo that it may eaſily overſet. The other way of going down is ſafer: this is, deſcending by a great number of ladders, placed obliquely, in a kind of zig-zag; but as the ladders are wet and narrow, a perſon muſt be very cautious how he ſteps, to prevent his falling. On deſcending, there are reſting-places, in ſome parts, that are very welcome to the weary traveller. In ſome of the ſubterranean paſſages the heat is ſo intenſe, as to throw a man into a perfect ſweat; and formerly, in ſome of theſe ſhafts, the air was extremely confined, ſo that ſeveral miners have been ſuffocated by a kind of igneous vapour called the damp; but, by ſinking the main ſhaft deeper, this has been prevented. Near the main is a large wheel, and an hydraulic machine, by which all the water is raiſed out of the bottom of the mine.

Virgin mercury is that which is prepared by nature, and is found in ſome of the ores of this mine, in a multitude of little drops of pure quickſilver. This is alſo to be met with in a kind of clay, and ſometimes flows down the paſſages or fiſſures of the mine, in a ſmall continued ſtream, ſo that a man has frequently gathered, in ſix hours, above thirty-ſix pounds of virgin mercury, which bears a higher price than common quickſilver. The reſt is extracted from cinnabar (which is the ore of quickſilver) by the force of fire.

Every common miner receives, in wages, three ſhillings and ſixpence a week; but many of them are afflicted with a nervous diſorder, accompanied with violent tremblings, ſudden convulſive motions of the hands and legs, and frightful diſtortions of the face. Thoſe are moſt ſubject to theſe diſorders who work in the places where virgin mercury is found, which, in a ſurpriſing manner, inſinuates itſelf into their bodies; ſo that when they go into a warm bath, or are put into a profuſe ſweat by ſteam, drops of pure mercury have been known to iſſue through the pores from all parts of the body. Theſe mines are often infeſted with rats and mice, which feed on the crumbs of bread, &c. dropped by the miners at their meals; but this plague ſeldom laſts long, for even they are ſeized with the like convulſive diſorders as the men, which ſoon kills them. It is deemed a neceſſary precaution for every perſon to eat, before he deſcends into theſe ſubterraneous regions.

All the adjacent country is very woody; but that the woods may not be deſtroyed, great quantities of fuel for the ſmelting furnaces are annually brought down the river Idria, from ſome foreſts at the diſtance of five or ſix miles. Beſide this river, there is a canal two miles in length, ſupplied with water by ſeveral ſtreams iſſuing from perennial ſprings, in order to put in motion the machines belonging to the mines.

ON INVITATIONS.

To the Editor of the Universal Magazine.

Sir,

I Believe there is one ſubject, pertaining to the inferior concerns of life, which no periodical or miſcellaneous writer has expreſly treated, which is the whole theory and ſyſtem of *Invitations*. What may have been the cuſtom formerly in ſuch caſes, I am too young to know, and too indolent to enquire, but having been led into many miſtakes by the preſent mode of giving invitations, I am induced to communicate a few remarks upon the ſubject through the medium of the Univerſal Magazine.

The firſt, and moſt common of all invitations, are *general* invitations: 'We ſhall be glad to ſee you, Mr.— to take a dinner with us,'—or—'When you paſs this way, we ſhall be happy if you will ſtep in, and eat a bit of mutton'—or—'Why do we never ſee you? We are always at home, and ſhall be happy if you will ſpend a day with us'—or—'Well! when am I to ſee you? Will you dine with me *ſoon?*'—or—'So! you never *will* come and dine with us?'—or—'Before you go out of town, I poſitively inſiſt, that you come and dine with us'—or—'I am engaged to-morrow, but, any other time, I ſhall be very happy if you will take pot-luck with us'—or—'Now, *do* come and dine with us, juſt in the family-way,'—&c. &c.

With many other forms, which it were endleſs to mention. A man, who has but a dozen of ſuch kind of friends, has no occaſion to keep a table of his own above once a fortnight—and yet, ſir, ſomehow or other, I have met with various diſappointments in accepting ſuch invitations.

It was but the other day I walked four miles from my houſe to dine with a friend, who 'was always at home,' and who had aſked me ſo often, that I began to be aſhamed of my rudeneſs—but he had *juſt dined*, although I was at his houſe half an hour before the time, which he told me he always kept. I concealed, that I had not dined, and making my bow precipitately, went to a neighbouring public houſe, and dined on a beef-ſteak.

Thoſe who 'are always at home,' I have found are very ſeldom in the humour of ſeeing company, and of thoſe who are 'moſt glad to ſee one,' the greater part are engaged abroad. Some are 'very happy to ſee me,' but it happens, very unfortunately, that the miſtreſs of the houſe is gone a little way out of town, and taken the keys of the cellar with her, and the maſter is to take a family-dinner with a friend.

In ſhort, ſir, after a variety of rebuffs and diſappointments, I am come to this opinion, that general invitations are words of courſe, and rarely mean any thing. If it be ſaid, and I will allow it, that they are not always ſo, yet how are we to know when this is the caſe? My rule, therefore, is never to accept of them; for, if my company is really wanted, it will be aſked more particularly; if not, and repeated experience convinces me of it, I account all ſuch invitations to be only 'a civil way of ſpeaking.' Another kind of invitation I am nearly equally averſe to accept—that which depends on accident. You ſtep to a friend's houſe on buſineſs, near his dinner hour: he thinks that politeneſs obliges him to aſk you, nay, perhaps he thinks that you come to be aſked. The ſafeſt rule, in theſe caſes, is to refuſe the invitation, unleſs, which cannot always happen, the inviter be one with whom we live in habits of the cloſeſt friendſhip and intimacy. Of ſuch friends, few men can boaſt of a very large liſt.

It is confeſſedly a great meanneſs to put oneſelf in the way of a man, on purpoſe to be aſked to dine; but

it is, in my humble opinion, a greater meanneſs to aſk a man who is not welcome. Diſtreſs may prompt the former, but for the latter I know no excuſe, unleſs a compliance with the hypocriſy of modern politeneſs be juſtifiable. Men of delicacy are the beſt of men, and cannot eaſily ſubmit to be obliged by ſuch a trifling favour as an invitation to dinner, and are conſequently very much at a loſs how to underſtand the common cant of invitations. He that compl.es with every verbal and general invitation, cannot fail to be often a very unwelcome gueſt, while he who accepts only that kind of invitation which cannot be miſunderſtood, a formal and written invitation, will rarely fail of being acceptable. Politeneſs, or what is called politeneſs, may induce a man to invite any one to dinner whom he may meet with, in hopes of a refuſal, but the man who ſends for his friend, generally wants to ſee him. Yours, &c.

S. S.

Curious HISTORICAL *and* DESCRIPTIVE PARTICULARS *reſpecting the* INHABITANTS *of the Kingdom of* Canara, *on the Coaſt of* Malabar.

[From Moor's Narrative of the Operations of Captain Little's Detachment.]

THE characters uſed in writing by the Canareeſe and Malabars, appear, as well as their dialect, to be derived from the ſame ſource: they write from the left, as we do; the Malabars, with an iron ſkewer, on leaves of a ſpecies of the palmyra, commonly called the brab tree: the leaf is about two inches broad, has many folds, ſtrung looſely by a loop at the end, and is held in the left hand, the thumb-nail of which, in thoſe who profeſs writing, has a nick in it to receive and direct the ſkewer: the writing is performed with inconceivable quickneſs, and not only trifling occurrences, but public records of diſburſements and events are thus written and preſerved.

On public or important matters, the Canareeſe, we believe, write on common paper; but their ordinary accounts and writings are done with a white pencil on black paper, or rather a cloth, which is prepared ſomething like our ſlate paper, and the pencil is a foſſil, very ſimilar to French chalk. A large book has but one piece of this paper, which is folded backward and forward, and will open out to ten or twelve yards in length.

In times of peace this country abounds in oxen and ſheep, the latter for food, the former for the purpoſe of labour, for the Canareeſe eat no beef, or ſwine's fleſh. Grain and fowls are alſo in abundance; but no geeſe, turkies, or tame ducks. The jungles and hills are inhabited by tygers, bears, and other carnivorous animals: of the cat kind, as well as the tyger, here are leopards, cheetas, and, we believe, the lynx is ſometimes ſeen, but no lions. Of the canine ſpecies, wolves, hyænas, jackals, and foxes are on every hill, and afford good ſport in chace; the antelope, and ſeveral other kinds of deer, in an open country, are ſeen every day in herds; ſome of them are very large and beautiful, having long branching antlers, and black ſkins ſpotted white: they are ſo fleet, it is in vain giving chace, and withal ſo ſhy, and keeping moſtly in a clear country, it is difficult to ſhoot them. Elks are ſaid to be in this country, but we never ſaw any, and a ſpecies of deer not unlike the elk, called in India the ſamba.

For the gun here are peacocks, partridges, quails, ſnipes, doves, plover, and other delicate birds: the pheaſant is not eatable, and has not the beautiful plumage of the Engliſh, or Chineſe pheaſant; but the jungle cock is, in every reſpect, but little inferior. The curmoa or ſlorakin is highly eſteemed, and here is another

bird, whoſe name we cannot recollect, larger than the turkey, and for the ſpit equally good: it flies ſlowly and heavily, and being ſhy, and lighting only in clear open places, is difficult to ſhoot. Hares are in plenty, but no rabbits. The tanks abound in ducks, teal, and widgeon, of the former a variety, and ſome very large. Fiſhing affords but indifferent ſport, for although the rivers and tanks ſeem to have plenty of fiſh, they will not take bait. We have lived ſeveral months together in a populous town, on the bank of the fineſt river in Canara, and were ſeldom able to procure fiſh, although had any been caught, they would moſt likely have been brought to us, as ſo much more than the uſual price would have been paid: from this we conclude the Canareeſe are very indifferent hands at the net. In times of peace this fair country, at ſo reaſonable a rate, affords every neceſſary of life, that the natives are not conſtrained to drain the water of its inhabitants for a ſubſiſtence, and their ſimplicity in food cauſes no demand for luxuries.

Fruit and vegetables are neither in ſuch variety or quality as might be expected, where they form ſo conſiderable an article in the diet of the people: plantains ſhould, we think from their utility, and perhaps flavour, rank firſt on the liſt of fruits; mangoes are in abundance, but very inferior to many kinds of that exquiſite fruit in Bombay, Goa, and other places on the Malabar coaſt. Mangoes when green give a reliſh to the ſimple food of the natives; they are alſo ſalted and uſed as an acid, the only one indeed, the Canareeſe have, excepting tamarinds, for they make no vinegar, although it might be ſo eaſily procured, as it is in moſt parts of India, by ſuffering the juice that exudes from the cocoa-nut or date tree to ferment a few days in the ſun, with a little coarſe ſugar mixed in it. This liquor, called by natives in different parts of India, tarree, neera, or ſindee, by the Engliſh toddy, is procured by hanging an earthen pot on a ſtem whence the embryo fruit has been cut: when drank before ſunriſe it is ſweet, of delicious flavour, and of medicinal properties; keeping the body cool and ſoluble. In a few hours, by violent fermentation, it becomes intoxicating, and is drank to exceſs by the lower claſſes of people in moſt parts of Hindooſtan: a ſpirit is alſo extracted from it by diſtillation. The liquor is gathered twice a day, in the quantity of half a pint, about the time of ſun-riſing and ſetting.

The other fruits are muſk and water-melons, pomegranates, grapes, pine-apples, limes, cuſtard-apples, jacks, guavas, and a few other inferior kinds common throughout India: grapes and pines ſeldom come to market. Cocoa-nuts and dates are in great abundance, and are ſent to the coaſt as an article of merchandiſe. Heretofore it has been a received opinion, that the cocoa-nut tree would not flouriſh but near the ſea; we have, however, ſeen very extenſive groves, or rather foreſts of them, about the centre of the peninſula, a hundred and fifty miles from the ſea, in as fine order as any on the coaſt.

No birds, or animals, peculiar for the beauty of their plumage, or other ſingularities, occur to us as natives, in this part of the peninſula. Monkies are numerous, and ſquirrels, of both a variety of kinds; the former diſguſting by their ſize, and too near approach to the human figure; the ſquirrels are ſome of them very diminutive and pretty, and by being fed and cheriſhed, become quite domeſticated and free. That beautiful little bird, called baya, ſo frequently mentioned by travellers to ſuſpend its neſt on the extreme branches of trees, is very common here.

In common with what other people we have viſited, living remote from our ſettlements, and out of the influence of our cuſtoms, the Canareeſe imagine every white man a phyſician; and as we occaſionally appeared in that character, it was eaſy to diſcover

their entire ignorance in what relates to compounds: in ſimples their information has been dictated by nature, and is not deſpicable; it is, indeed, ſufficient for their purpoſes, for being moderate in living, and ſituated in a temperate climate, few people have leſs occaſion for phyſicians. In caſes of fever nature has furniſhed them with a medicine that grows in every hedge; it is a common ſhrub, the leaves of which being dried and reduced to powder, was, by our profeſſional gentlemen, in intermittent caſes, given in preference to bark. Antimony is uſed, but their confined knowledge in chymiſtry prevents any elegance in the preparation: nitre and allum appear to be favourite medicines, and are adminiſtered in a variety of caſes.

Inoculation for the ſmallpox, we think, is not practiſed, nor is the diſeaſe much dreaded when it does make its appearance, which is not unfrequent, but without any extenſive effects: from the ſame favourable cauſes already mentioned, the temperature of the climate, and their ſimplicity in food, theſe people have it in ſo benign a form as to create very little alarm: ſome, however, we have obſerved, both men and women, marked with the confluent kind. Opium is taken, not as a medicine but a luxury, in the way of inhalation; laudanum is unknown:—they make and uſe ſal ammoniac, but know not much of its properties.

In ſurgery, the Canareeſe, it may be ſaid, have no ſkill or knowledge; were a man's finger in a ſtate of mortification they could not remove it. In bruiſes and contuſions nature is again kind to them, as on every road a ſhrub grows, the leaves of which being boiled in water, the fumes, or the water, is a moſt excellent emollient: it is common in moſt parts of India, and by us called the fomentation-leaf. We have before had occaſion to obſerve there being ſcorpions in this country; they are the largeſt we have ever ſeen, and quite black, but their ſting is more painful than dangerous: in theſe caſes the Canareeſe ſcarify the affected part, and rub it with hot cocoa-nut oil, and encruſt it with cow-dung; the latter is a common application, and is not a bad poultice. The only ſnake whoſe bite, that we know of, is mortal, is the cobrâ de capello, ſo called by Europeans from having a membrane round its head, which, when irritated, it expands like a hood, as the Portugueſe name denotes:—it is a very beautiful ſpecies, five or ſix feet, or more in length, and is the only inſtance within our knowledge, of a ſerpent of that ſize being mortally venomous; as we have ever remarked the ſmaller the reptile, the more dangerous its bite. In India there are ſnakes, or rather worms, not more than four inches in length, nor thicker than a tobacco-pipe, whoſe bite is almoſt inſtant death: in Tillecherry, many years back, we recollect the death of an elephant was imputed to the bite of one of theſe apparently inſignificant reptiles.

The idea that venom decreaſes in animals in an inverſe proportion to their ſize, is natural; for as nature, we are taught, never works in vain, it would appear a ſuperfluity to have beſtowed on creatures the faculty of killing by inciſion, whoſe ſtrength alone is a ſufficient defence againſt its enemies, and whoſe contact is abundantly mortal for the purpoſes of procuring food.

The cobrâ de capello is, in a ſingular manner, charmed by muſic, rearing its head, and expanding its hood to the ſhrill ſound of any wind inſtrument; and many people get a livelihood by carrying a parcel of them about in baſkets, and making them dance to muſic for the entertainment of any curious perſon. The ſnakes thus ſhown are perfectly harmleſs, and may be ſafely handled by any perſon; it is ſaid their impotence proceeds from a ſtone being removed from under their tongue, that ſupplied their teeth with venom: theſe

ſtones were formerly, and indeed are ſtill, highly prized as antidotes againſt the poiſon of their former poſſeſſors; they are in ſize, ſhape and appearance not unlike a tamarind ſtone, and may be found genuine, if by immerſing them in water, ſmall bubbles continue to ariſe from them. Whether or not they are found in the ſerpent's head, or have any virtue as an antidote, we do not determine; but the facts are univerſally known and admitted. Tavernier in his Indian Travels, page 155, has a tolerable good portrait of the cobrâ de capello, and he there mentions theſe ſtones.

It is not uncommon for people who frequently loſe fowls, or any kind of poultry, to ſend, ſuſpecting the thief, to a ſnake ſhower, who by piping about the premiſes, will preſently call forth the cobrâ de capello, if there be one, and with all imaginable *ſang froid* ſeize it and put it in his baſket, deſiring no recompence but the ſnake for his pains. This ſpecies is held in high veneration by both Hindoos and Mahomedans, and ſubmits only to thoſe its ſuperior in ſize; for the merits of theſe creatures ſeem to be meaſured by their magnitude, and if it were for the reaſon before given it would be rational enough, but this does not appear to be the motive, for the people who cheriſh theſe ſtrange companions, have not the ſmalleſt apprehenſion of danger. Old fakeers, or ſuperannuated Hindoos, retired from the buſtle of the world, frequently nouriſh in, or about their huts, one of theſe monſtrous ſnakes, which becomes quite domeſticated, and is ſuppoſed by its doating maſter to be the guardian genius of his life and fortunes.

Accidents frequently happening from the bite of this ſnake, it muſt be a great gratification to the perſon that diſcovers the means of preſerving the lives of his fellow-creatures, who may have the misfortune to be bitten, and ſnatching them from the jaws of death by a method ſo ſimple, that every perſon is capable of procuring and applying it. This has lately been diſcovered in any volatile alkali ſpirit, which has been proved by a variety of caſes, to be a ſpecific in counteracting the effect of this poiſon on the ſyſtem, which it would appear to do by ſtimulating the fibres, and preſerving the irritability, more than in reſiſting the diſeaſe of the poiſon.

Eau de luce, anſwers as well as the pure cauſtic alkali ſpirit, if, allowing for the eſſential oil, in its compoſition that tend to diminiſh its powers, a larger quantity is adminiſtered; and ſo long as that retains its milky white colour, when diluted, it is ſufficiently efficacious.

So immediate are the effects of this ſpecific, that if it is given ſoon after the ſubject is bitten, in a few minutes a cure will be effected; at any period, if the medicine can be ſwallowed, the mortal effect will be prevented. From fifty to ſixty drops, or nearly a tea-ſpoonful, in a ſufficient quantity of of water, is a doſe, and if given immediately the poiſon is received, its effects will be prevented; if at a conſiderable time after, the doſe muſt be repeated, until the effect is produced. If ſome of the cauſtic alkali be applied on a pledget to the wound, it will heal the ſooner.

As well as againſt the bite of this ſnake, the volatile alkali appears to act as a repellent to the venom of other kinds, and may poſſibly be found equally efficacious againſt moſt animal poiſons: at any rate the experiment is worthy of a trial. This ſpecific was firſt made known by Mr. Williams, of Calcutta, in the Aſiatic Reſearches; whence moſt of theſe particulars are borrowed; vol. II. page 323. Inſtances of ſucceſsful treatment have alſo occurred in Bombay, and one has come particularly under our notice: indeed the medicine was never known to fail. As oil is frequently adminiſtered as a remedy in the bite of ſnakes, it may not be unneceſſary to caution againſt the uſe of it with the volatile alkali, as it blunts the ſtimulating quality, and renders it uſeleſs.

There are in Canara, and we believe all over India, the cent'pied, whoſe bite or ſting, like the ſcorpion's, is painful, but not dangerous. The practice of cauterizing is in vogue, moſtly in rheumatic complaints, and ſometimes in fevers. Phlebotomy is, we believe, all over India, a part of a barber's buſineſs; it is generally done in the foot with a razor. We have before noticed the Guinea-worm being more frequent in this country than any other that we can ſpeak of *. No other complaint occurs to us as prevalent among the Canareeſe.

Architecture appears the only ſcience in which the Canareeſe have made any conſiderable advancement. Some of their pagodas are judiciouſly conſtructed, and elegantly ornamented; and by the accounts of the famed city of Annagoondy, their excellence in this art would ſeem with reaſon to claim an acknowledgment. That city is, however, unrivalled by any modern execution. The troubles of their country, of late years, when it has almoſt always been the ſeat of war, will plead an excuſe for the inhabitants, in not having turned their thoughts to the ſofter employments of peace and tranquillity.

Refinement in muſic beſpeaks a degree of civilization that cannot be expected in a people ſituated like the Canareeſe, often changing maſters, always ſubject to a foreign yoke, and labouring under the diſadvantage of frequent ſtrife and troubles, general and domeſtic. Their muſic is indeed barbarous. Their wind inſtruments reſemble the bagpipe, in very unſkilful hands; which, with a three ſtringed violin-like-thing, tinkling cymbals, and a kind of drum, compoſe their concert, and produce horrible diſcord.

Poetry, like muſic, flouriſhes only among a quiet people, under a free and ſettled government. This temperate climate, bleſſed with beautiful women, beautiful proſpects, and a ſerene ſky, ſhould take the lead in amatory and paſtoral poetics; but ſo it is, from the cauſes already ſtated, and the indolent turn of the men, the muſes are entire ſtrangers, and Canara's copper-coloured beauties muſt remain unſung.

Where neither muſic nor poetry exiſt to harmonize the ſoul, the poliſhed attentions of gallantry are of courſe unknown. Here the unfeeling Canareeſe ſees, without emotion, the lovely partner of his bed toiling all day unaſſiſted in every ſpecies of domeſtic drudgery; and having prepared his meal, he eats by himſelf in ſulky ſilence, and leaves her to her

* When the party arrived at Hurry Hal, Mr. Little was confined to his bed by that ſingular diſorder, the Guinea worm, in India called the narroo, which had attacked his legs very ſeverely: this is a common complaint in the upper country; more ſo, it ſeems, than near the ſea, where, however, it is well known. The writer of this narrative ſpeaks from painful experience, when he ſays they are moſt troubleſome, painful companions. Although more frequent in the upper country, we have ſeen ſeverer caſes near the ſea, where on one gentleman, at one time, we think there were thirteen: they moſtly come in the legs, ſometimes in the arms, joints of the fingers, and once we heard of one in the tongue: the part attacked is much ſwelled and inflamed. The barbers of this country are expert at extracting them, by raiſing the ſkin with a razor, before it is broken by the worm, and pulling it out; but in this treatment they are apt to break, when they ſhortly appear in a different place, with additional pain and inconvenience. The uſual treatment is to wait patiently until the worm breaks the ſkin, and then with a thread tie it round a piece of ſtick, or paper, and by frequently turning it, wind the worm out a little at a time; by theſe means, and keeping it conſtantly poulticed, an inch or two, or three, may be extracted daily, until ſix, and ſometimes ſeveral more feet of the worm are taken out: but this is a tedious method. The eaſieſt and moſt expeditious cure, is a green aloe leaf, ſplit and applied hot as poſſible to the parts, and taking internally half an ounce of burned garlic daily: in three or four days the worm will die in the fleſh, and a cure be ſpeedily effected.

ſolitary repaſt. If they live on the produce of a garden, the labour of cultivation falls to her ſhare: he ſits at home, and ſtupified with opium, deigns not, when ſhe returns from her work, one ſmile of approbation, or one cheering word, to lighten the labour of the day. On a journey, he mounts a bullock; ſhe, with a child in her arms, pants after him to drive it; while he, regardleſs of her fatigue, conceives it not his duty to eaſe her of the additional load, the produce of the only paſſion he appears capable of feeling. Were it not his having enough of the animal in him to excite an obſervance of wedded rites, the Canareeſe might be ſuppoſed not ſuſceptible of emotion in the preſence of beauty, and marrying from motives of eaſe and convenience, as void of choice, whether his wife were handſome or not.

The females are, we think, lower in ſtature than the generality of Aſiatics, are remarkable for the ſymmetry of their perſons, and have a delicate animation in the features of the face, that renders them more than uſually attractive and intereſting. Black hair, and an eye 'black as the raven-tinctured robe of night,' are univerſal throughout Aſia; and if the fair of Canara do not boaſt preeminence in the former, to the latter they aſſert that claim; and their complexion being fairer and clearer than moſt others, the contraſted blackneſs of the eye is more conſpicuous, which ſeems to ſwim in a delicious languor of ſuperior brilliancy.

It is ſuſpected they are not particularly conſtant in connubial connexions: this failing, however, if admitted, would not bear ſevere condemnation, were we to conſider, that the tie by which they are united is feeble, not being drawn cloſe by the intereſt of the heart, and muſt be eaſily looſened by attention and flattery, gratifications to which they are ſtrangers; their novelty will therefore the more powerfully enforce them; and almoſt deſtitute of the reſtraints of education or inſtruction, thoſe prejudices will be of little weight, oppoſed to the impulſe of the conſtitution. It is, however, allowed, that when removed from the degrading indifference of their ſlothful ſuperiors, and placed in ſituations becoming their ſex, they are fully ſenſible of kindneſs and attention, and none more ſuſceptible of the benign emotions of grateful affection.

The cuſtom of blackening their teeth with antimony, which is prevalent among the female Canareſe, will not for a long time, indeed never, appear a beauty in the eye of a European; it will, doubtleſs, require a long reſidence among them, ere he will be at all reconciled to a practice ſo apparently unnatural. That the cuſtom is in ſo much repute is greatly to be lamented, as the females who have not complied with it, are as much to be admired for the beautiful enamel of their teeth, as thoſe in any part of India. It is not, however, the taſte or blame of the younger ones, as the ceremony generally takes place, when the unfortunate victim to this barbarous cuſtom is at a very early age. We have had opportunities of remonſtrating with the parents on the folly of it, but with very little effect. The argument they uſe, is, that it preſerves the teeth; and truly it may be a juſt one; for we have frequently ſeen the ſable rows of aged matrons quite perfect and good; it is, moreover, thought a beauty.

The men again are in the oppoſite extreme; as by the immoderate quantity of chuna they chew with their beetel, the enamel is corroded, and their teeth are brought to a premature decay; ſo that a man with good teeth is as rare to be ſeen as a woman with bad.

CHARACTER *of* LEWIS XVI, *before his Acceſſion to the Throne.*

[From Street's Hiſtory of the Reign of Louis XVI.]

LEWIS the ſixteenth, the third ſon of the late dauphin of France and Maria Joſepha of Saxony, was born on the 23d of Auguſt, 1754. As ſoon as he had attained the ſeventh year of his age, the duke de la Vauguyon was appointed his governor, and the biſhop of Limoges his preceptor. The former was diſtinguiſhed by the politeneſs of his manners, and the bigotry of his religious principles; the latter, united with enlarged piety, extenſive erudition. But the ſtudies of Lewis the ſixteenth, then duke of Berry, were ſuperintended and directed by the dauphin; a man ill qualified for an office of ſuch importance. His education had been entruſted to the biſhop of Mirepoix, a prelate of the moſt auſtere and repulſive manners; abaſhed by this auſterity, and fettered by the fear which it inſpired, the intellectual attainments of the dauphin were neither numerous nor valuable. The gloom that pervaded the mind of the tutor communicated its influence to the pupil, and though the dauphin was virtuous and religious, yet his virtue was ſoiled by want of firmneſs, and his religion was ſullied by ſuperſtition.

Lewis the ſixteenth had ſcarcely attained his eleventh year, when his father died; but his mind had received, at that early period, a deep impreſſion from ſuperſtition, which a more mature age was not able to efface. Serious and reſerved from the influence of this principle, he mixed rarely in the amuſements natural to youth, and hence it was generally believed that the progreſs he made in his ſtudies was rapid. But of the intellectual progreſs of princes, it is always difficult to procure any accurate information; rumour, indeed, never fails 'to ſpeak goldenly of their profit,' and therefore the hiſtorian will always credit with caution; he will recollect that princes deſcribe around them a circle of courtiers, from whom the abhorrence of partiality, or the averſion from prejudice, can ſcarcely be expected; he will not forget that theſe men, like the ſatellites of a planet, receive light and animation only from the object around which they move.

The progreſs of Lewis, in his ſtudies, was very ſlow; and all the endeavours of his father, and his preceptor, to ſubdue this tardineſs, were ineffectual. Though they puniſhed him by the frequent privation of thoſe amuſements of which his brothers were permitted to partake, they were never able to inſpire him with any deſire of improvement, or with any ſpirit of emulation. His demeanour was ſo unpoliſhed, that it approached to vulgarity; and his diſpoſition ſo ſerious, that it partook of ſullenneſs. He had fixed opinions, and no ſettled ſyſtem of conduct; and with ſuch facility did he adopt the ſentiments, and act according to the advice of others, that when it was determined to unite him to the archduchess of Auſtria, he was not acquainted with the determination, till the propoſals of marriage had been diſpatched to Vienna.

CHARACTER *of the late Queen of* France, *when Dauphineſs.*

[From the SAME.]

THE dauphineſs, at the period of her marriage, had ſcarcely attained her fifteenth year. Her form was graceful and majeſtic: her features regular and expreſſive; her eye-brows, by being too elevated, gave to her

countenance an air of haughtineſs, which was only concealed when ſhe condeſcended to ſmile. Her behaviour, as occaſion required, was either arrogant or affable; but her arrogance was natural; her affability aſſumed: ſhe deſpiſed the mild diſpoſition and moderate abilities of the dauphin, whom ſhe attempted to pleaſe only for the purpoſe of faſhioning him to her wiſhes. She was intriguing and inſincere, voluptuous, prodigal, and inconſtant. With theſe attainments it was not difficult for her to acquire the admiration of the people. Popularity, indeed, to the powerful, has always been an eaſy acquiſition; and the facility with which it has been attained, has, perhaps, produced the frequency with which it has been abuſed. But the influence of the dauphineſs was not efficacious alone upon the people. The imperious demeanour of the king's favourite, madame Dubarri, had diſguſted ſeveral of the moſt illuſtrious families of France, who had retired from a court in which they could only have remained by bending the knee to whoredom, and by burning the incenſe of flattery upon the altar of proſtitution. Theſe families, therefore, naturally attached themſelves to the dauphineſs, from whom they expected that patronage to which the ſacrifices they had made, entitled them. The other branches of the royal family had been induced to viſit the favourite, but the dauphineſs invariably refuſed. When the king once endeavoured to prevail upon her, ſhe told him, that 'obedience to his commands would have been a duty, if ſhe had been born his ſubject, but as ſhe was the daughter and ſiſter of an emperor, his majeſty, ſhe hoped, would excuſe her.' But the principal object over which the dauphineſs endeavoured to acquire an influence, was the dauphin; and, perhaps, on no one could her attempts have been exerted with more ſucceſs. Averſe from the ceremonies attached to his exalted rank, he willingly ſubmitted to her authority, which releaſed him from duties that diſguſted, and allowed him the poſſeſſion of that retirement to which he had always manifeſted ſuch an attachment. To this attachment the dauphineſs, it was ſuſpected, afforded additional ſtrength by her encouragement and approbation.'

ANECDOTES *of the preſent Empreſs of* RUSSIA.

IT has been often obſerved, that no character is completely vicious: at leaſt, that in characters very odious, in general, one ſolitary virtue has appeared, perhaps, in the melancholy aſſemblage of vices. To Catharine II, (who, in her recent conduct toward Poland, has exhibited ſuch inſatiable ambition, ſuch injuſtice, hypocriſy, and cruelty) the praiſe of Chriſtian forgiveneſs, at leaſt, cannot be denied. This will appear from the following extract from Chantreau's Philoſophical, political, and literary Travels in Ruſſia, in the Years 1788 and 1789. 'The death of Peter the third, was followed by none of thoſe tragical events, with which revolutions had till then been ſtained. Nobody was even ſent into Siberia; there was neither public nor private execution. The empreſs pardoned even her perſonal enemies. Marſhal Munich, who had given, as we have ſeen, the beſt advice to the emperor, and had offered to defend him at the hazard of his own life, was not regarded with an evil eye. On the contrary, the empreſs was charmed with the attachment, which this foreigner had ſhown for him, who had brought him back from Siberia; and when ſhe ſpoke to him of it, Munich replied; 'It is true, madam, that I offered to cover him with my body, but after twenty years captivity, I owed to him my liberty, and could I do leſs? Was not I bound by the ſtrongeſt ties of duty and of gratitude to devote myſelf to his ſervice? Now your majeſty is my ſove-

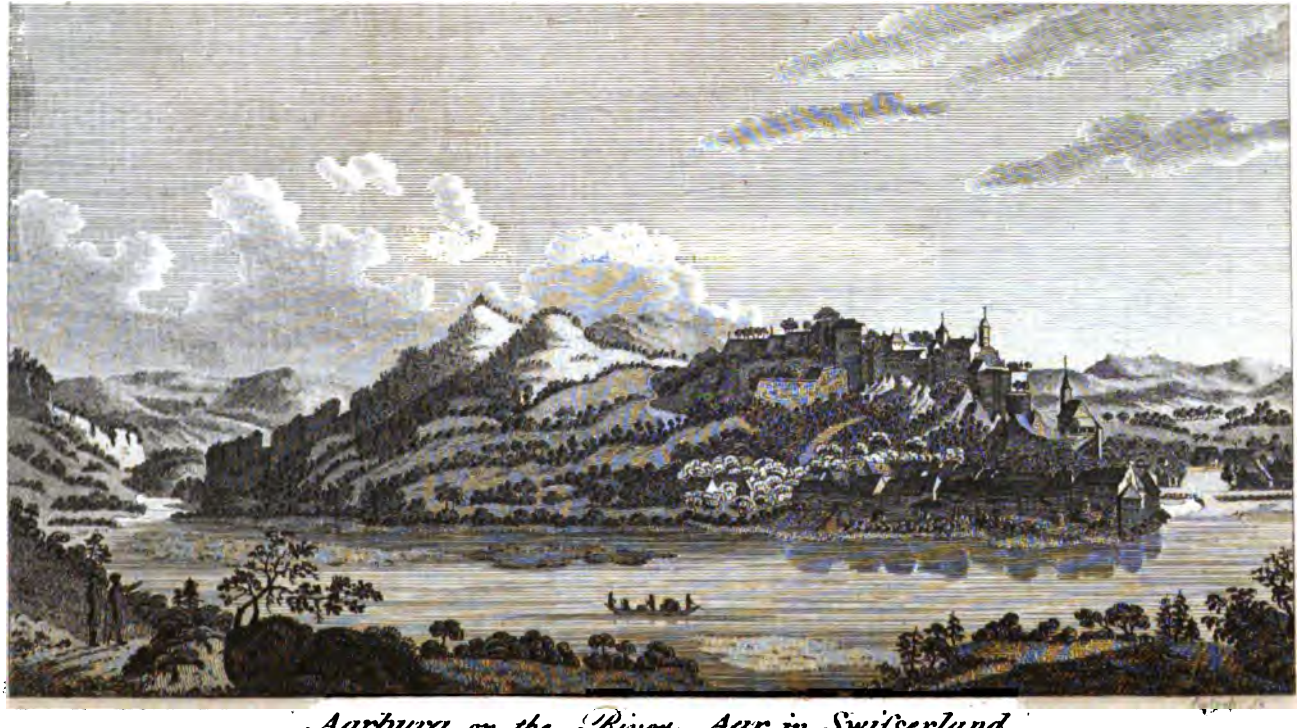

Aarburg, on the River Aar, in Switzerland.

reign, and you ſhall find in me the ſame fidelity.' The empreſs, ſtruck with this bold anſwer, ſhowed no leſs greatneſs of ſoul on her ſide. She repoſed in him the moſt unbounded confidence, which was well juſtified by the marſhal's behaviour. When a new inſurrection was no more dreaded, count Woronzoff, who had been arreſted, was ſet at liberty, and he was afterward employed by adminiſtration. As for the counteſs, ſhe experienced neither jealouſy nor reſentment from Catharine. Her perſon was reſpected, and ſhe was permitted to enjoy, without any reſtriction, all that ſhe had received from Peter's liberality. Catharine, guided by a ſentiment of magnanimity peculiar to her character, forgot the arrogance of this favourite, and the uneaſineſs ſhe had brought upon her. But what completed this greatneſs of ſoul was, ſhe alſo forgot the plot hatched by this ambitious woman, to ſtrip her of the imperial dignity, that ſhe might inveſt herſelf with it. She was allowed to marry a private ſubject, and ſhe was ſtill vegetating at St. Peterſburg during our reſidence there. Goudowitſch, who had been the emperor's counſellor and favourite, and had given particular offence to the empreſs, received permiſſion to retire into his own country, and the empreſs had the greatneſs of mind to forget the offence of the father, for the good of the ſon. Young Goudowitſch was recalled into Ruſſia, where he is now a lieutenant-general, governor of the province of Rjazan, and a knight of the order of St. Alexander Newſki. The Holſtein guards, who had offered to the emperor to march againſt Catharine, and even preſſed him to give them orders to this effect, received not the leaſt mark of reſentment. Such, as choſe, were incorporated with other regiments, and the reſt were left at full liberty to withdraw from Ruſſia. Prince George of Holſtein, uncle to the emperor, who was privy to the prince's deſign of confining the empreſs, was put under arreſt, in his own palace, during the revolution; but as ſoon as it was terminated, ſhe raiſed him to the rank of field-marſhal, and named him governor of Holſtein, during the grand duke's minority.

An ACCOUNT *of the* TOWN *of* AARBURG, *in* Swiſſerland: *With a perſpective* VIEW *of its romantic Situation.*

AARBURG, or Arburg, a ſmall town of Swiſſerland, in the territory of Argau, is ſeated, with a ſtrong fort, on the right ſide of the river Aar. This fort, or citadel, built on a rock, was greatly ſtrengthened, in its fortifications, in the courſe of the laſt century. The caſements are bomb-proof, and the fort is provided with good wells. A ſmall garriſon is conſtantly kept here; and the commandant is, at the ſame time, bailiff of a diſtrict which ſeparates Upper and Lower Argau, and the cantons of Soleure and Lucern. The view from the fortifications, over a rich and picturesque landſcape, is very extenſive.

Argau, or Aargau, in which this town is ſeated, is a ſmall province, forming the northern part of the canton of Bern. Under this name, it once included a much more extenſive diſtrict between the Ruſs and the Aar. It is divided into Upper and Lower Argau, of which the town of Aarburg forms nearly the point of ſeparation. It contains ten bailwicks, and four principal towns, Zoffingen, Arau, Lentzburg, and Broack. The two parts exhibit a very fertile country, well watered by rivulets ſtored with fiſh, which deſcend from the canton of Lucern. They afford, in courſe, very excellent paſtures. The country alſo produces wine, and corn of all kinds. Upper Argau has the preference with reſpect to fertility of ſoil, but Lower Argau compenſates for this inferiority by the riches of induſtry, particularly what reſults from the cotton manufacture. In both, very rich peaſants are to be found in many parts.

METEOROLOGICAL JOURNAL, March 1795.

D.	H.	Baro.	T.out	T. in	Hyg.	C.	Wind.	Weather, &c.
1	7	29,69	26,5	41,5	67	o	N 2	
	2	29,82	33,5	42	64	o	NW 2	hazy. foggy. clear night
2	7	29,92	33	42	63	3	SSW 1	. cloudy : little ſnow and rain.
	2	29,80	37	41,5	67,5	5	SSE 1	. little ſnow
3	7	30,12	36,5	41,5	70	h	ESE 1	
	2	30,16	36,5	40,5	67,5	5	S 1	: little wet
4	7	29,95	38,5	42,5	77,5	h	SW 1	drizzling and little rain : fair
	2	29,89	48,5	45,5	80	3	W 2	hazy : cloudy. rain
5	7	29,80	43,5	46,5	79	5	SSW 1	gentle rain. more wind : fine
F	2	29,65	51,5	49,5	71	3	SSW 3	hazy. leſs wind and drizzling night
6	7	29,12	47,5	49,5	79	5	SW 1	little wet. more wind
	2	29,33	49,5	50	65,5	4	WSW 3	little wet at times : fair
7	7	29,52	44,5	49,5	68	5	W 2	hazy : little wet at times
	2	29,80	45,5	49	67,5	5	NW 2	little rain. leſs clouoy. fine eve
8	7	30,26	35	47	63	2	NW 1	
	2	30,28	42	47	59	2	N 1	. hazy eve. cloudy : drizzling
9	7	30,09	38,5	46	69	5	SW 1	drizzling. fair : gentle rain
	2	29,91	42,5	46	76	5	S 2	continual rain : fair morn
10	7	29,54	40	47,5	72,5	1	WSW 1	hazy. cloudy
	2	29,44	46,5	47	67	5	SW 2	gentle rain at times : fair
11	7	29,18	39	46,5	70	4	SW 1	: little hail and rain
	2	29,24	44,5	48	64	3	W 1	. little rain at times
12	7	29,33	36,5	46,5	73	3	W 1	foggy. cloudy. fine
	2	29,24	44,5	46,5	69	3	SSE 1	. much rain eve and night
13	7	29,07	36,5	45	72	6	NE 1	fleet and rain. fair
	2	29,26	39	46	70	5	NE 1	hazy
14	7	29,58	33	43	71	4	ENE 1	: little ſnow
	2	29,50	40	45	67	5	ENE 2	. little rain. fleet and ſnow : fair
15	7	29,47	37	43,5	70	5	W 1	. leſs cloudy
	2	29,52	43	44,5	64	3	W 1	. cloudy eve : much rain
16	7	29,12	38	44,5	80	6	ENE 1	drizzling. much rain
	2	28,97	45,5	46	82	5	ENE 1	much rain. fair night
17	7	29,37	35	46	68	4	W 1	. more cloudy
	2	29,37	38	45	67,5	5	NNW 1	. little wet at eve : little wet
18	7	29,51	36,5	46	69	5	N 2	little ſnow or rain at times
	2	29,60	58,5	43,5	68	5	N 2	. little ſnow. leſs cloudy eve. clear
19	7	30,08	32	42	66	1	N 1	. hazy. cloudy and wind NW : fine
	2	30,15	42	44,5	64	3	W 1	hazy. foggy night. clear
20	7	30,18	38	44,5	67,5	3	W 1	hazy
N	2	30,25	47	47	65	4	WNW 2	. little wet. fine
21	7	30,18	37	46,5	68	1	W 1	
	2	30,05	48	47,5	63	3	WSW 1	. clear eve. hazy
22	7	30,05	41	46	69	4	WSW 1	. fine
	2	30,05	48,5	48,5	61,5	3	N 1	. cloudy. clear night
23	7	30,10	36,5	43	68	2	N 1	foggy
	2	30,04	45	47	67	3	N 1	foggy. fine. thick upward at eve
24	7	29,97	40,5	49	67	h	SW 1	
	2	29,97	49	50	64	5	SW 1	. fine night
25	7	29,77	39	47	67	2	SW 1	hazy : cloudy
	2	29,73	47,5	50	61	5	SW 1	. fine night
26	7	29,74	38	44,5	68	2	WNW 1	hazy. fine : cloudy
	2	29,79	49	56	59	5	N 1	. chiefly rain and wind E. cloudleſs hazy night
27	7	29,79	39,5	41	68,5	5	NE 1	: fine
	2	29,79	46	49	65	3	NE 1	. hazy eve
28	7	29,94	37	46	68	h	N 1	: cloudleſs but hazy
	2	29,92	47,5	48,5	67	o	NE 1	hazy. thick upward at night
29	7	29,98	37,5	45	77,5	h	NE o	. foggy : cloudleſs but hazy
	2	29,92	48	49	67	1	E 1	hazy. thick upward at eve
30	7	29,92	39,5	46,5	68,5	h	SSE 1	. leſs hazy and few clouds : fine
	2	29,88	51,5	49,5	62	3	S 1	
31	7	29,87	41	48	72	1	SE 1	hazy
	2	29,84	54,5	51	52,5	2	SSE 1	. thick upward at night

REMARKS *on the State of the* AIR, VEGETATION, *&c.* March 1795.

4. THE air hazy and very moiſt at noon, but the firſt mild and pleaſant day of this year.—5. Aconite and ſnowdrop, which were in bulbous flower the beginning of laſt month, are now expanded.—7. Croçuſes begin generally to be in flower.—9. Polyanthoſes in bloom.—15. Radiſhes and peas ſown at Chriſtmas begin to appear.—16. The atmoſphere very light, very moiſt, and rainy all the day; but fair at night and much drier.—27. Hyacinths in flower.—30. Mezereon in bloſſom.—From the ſeverities of laſt winter, the trees and ſhrubs, that have eſcaped its deſtructive powers, appear, in general, to be retarded a month in their vernal progreſs.

Rain, 1 inch 93 hundredths.

OBSERVATIONS *on the* DISEASES *in* March 1795.

THIS proved on the whole a very healthy month; few diſeaſes of any conſequence occurred. Thoſe who had been afflicted with gout, ſuffered ſome ſlight attacks, but they were neither very ſevere, nor of long duration. Meaſles were a little prevalent, but very mild; and ſmallpox frequent, ſpreading from a very general inoculation, but the ſymptoms were of the mildeſt kind, ſcarcely requiring any remedies.

MONTHLY REPORT *of the* BOARD *of* AGRICULTURE, *&c. for* March.

THE cool dry weather which ſucceeded the thaw, and now continuing, has been a material benefit even to the wheat plants, ſo often drowned and frozen, but which are daily improving in colour. Thoſe fortunately ploughed in, have, however, much the advantage of the late harrowed in plants, the roots of which were much expoſed to the varying ſeverities of the ſeaſon.—The Lent corn ſowing, though late, has proved leſs unfavourable than was generally expected; the backwardneſs of vegetation is much in its favour.—The very early ſown beans have every where rotted. The latter ones begin to ſhow themſelves promiſingly.—The barley countries are in the height of ſowing, and the lands laid tolerably dry, work well for the ſeed.—The fens are yet in no condition for oats; nor is it expected that any extent can be ſown this ſpring, from the lands already drained, drying, and capping ſo faſt.—The clover plants are found to have ſuffered much, in moſt of the diſtricts throughout the kingdom.—The cole ſeeds intended for crops are almoſt generally cut off, only a few later-ſown ones remaining; the prices are therefore ſtill advancing.—The winter tares are much cut; but the ryes are in general healthy and vigorous.—The graſiers have been general ſufferers through the long ſeverity of the winter; many of the principal ones in Leiceſterſhire, Norfolk, Eſſex, and the weſt of England, have been compelled to ſend their beaſts half fed to market, having exhauſted all their hay, turnips, and other ſtover, long before the breaking of the froſt. We augur from this the deareſt ſpring for good beef that Smithfield ever experienced.—Mutton grows ſcarce and dearer; the flock maſters in Dorſetſhire, Wiltſhire, the South Downs and other breeding counties, ſpeak of heavy loſſes in their lambing down; their aggregate calculation makes them amount to a third of the produce, from the ewes quitting their lambs for the want of milk. Lean ſtock of all kinds are dear. Epping Foreſt is well ſtored at preſent for the home diſtrict. Hay and ſtraw continue ſtill advancing in price.

An Intereſting ACCOUNT *of the March of the* BRITISH EMBASSY *from the City of* TONG-TCHEW, *in* China, *to the Imperial Palace of* YEUMAN-MAN-YEUMAN: *With a new Deſcription of* PEKIN, *the Metropolis of the Empire, and ſome curious Particulars of the* CUSTOMS *and* MANNERS *of the* Chineſe.

The following Article is ſelected from 'A Narrative of the Britiſh Embaſſy to China, in the Years 1792, 1793, and 1794, by Æneas Anderſon, then in the Service of Lord Macartney.' *This Work, which appears to be well written, has this Advantage over all former Accounts of* China, *that the Author cannot well be ſuſpected to introduce any fictitious Circumſtances, or to indulge in the common Exaggerations of Travellers, becauſe he muſt be ſenſible that any ſuch Accounts would be eaſily contradicted by his Companions in the Embaſſy; eſpecially, as this Publication will be followed by the larger and more expenſive Account preparing by Sir* George Staunton.

AT two o'clock, in the morning of Wedneſday, Auguſt 21, 1793, the general was beat through all the courts of the houſe, as a ſignal for the ſuite to prepare for their departure. After an haſty breakfaſt, the whole of the embaſſy was ready to proceed on their journey. The ſoldiers were firſt marched off to covered waggons provided for them; the ſervants then followed, and were received into ſimilar machines; the gentlemen of the ſuite next proceeded in light carts drawn by a ſingle horſe. Lord Macartney, ſir George Staunton, and Mr. Plumb, the interpreter, were conveyed in palanquins, which were each of them borne by four men.

The vehicles which carried the ſoldiers and ſervants were common hired carts, drawn by four horſes, unequally coupled together, and covered with ſtraw matting. The harneſs, if it may deſerve that name, was made of rope and cordage. The ſingle-horſe carts were covered with blue nankeen, and had doors of lattice work lined with the ſame ſtuff: the drivers walked by the ſide of them.

At four o'clock this proceſſion was in motion, which conſiſted of ſixty carts for the ſoldiers and ſervants, and twenty for the conveyance of the gentlemen belonging to the ſuite, exclu-ſive of carts for the private baggage, and the coolies, or porters, employed to carry the preſents and heavy baggage, which were conveyed on their ſhoulders; four hundred of whom were employed on this extraordinary occaſion.

About five o'clock we had quitted the city of Tong-tchew, and entered immediately into a fine level country of the moſt luxuriant fertility, which, as far as the eye could reach, appeared to be one immenſe garden.

The road along which we travelled, is not only broad but elegant; and is a proof of the labour employed by the Chineſe government to facilitate the communications between the capital, and the principal parts of the kingdom. The middle of this road conſiſts of a pavement of broad flag ſtones about twenty feet wide, and on each ſide of it there is ſufficient ſpace to admit of ſix carriages to run abreaſt. The lateral parts are laid with gravel ſtones, and kept in continual repair by troops of labourers, who are ſtationed on different parts of the road for that purpoſe.

At ſeven o'clock the cavalcade ſtopped at a large town, whoſe name is Kiyeng-Foo. To call it populous, would be to employ a ſuperfluous expreſſion, that is equally appro-

priate to the whole kingdom, as every village, town, and city; nay, every river, and all the banks of it, teems with people. In the country through which we have paſſed the population is immenſe and univerſal: every mile brought us to a village, whoſe inhabitants would have crowded our largeſt towns; and the number of villas ſcattered over the country, on each ſide of the road, while they added to its beauty, were proofs of its wealth. Thoſe which we approached near enough to examine as we paſſed, were built of wood, and the fronts of many of them were painted black, and enriched with gilded ornaments.

The day of our journey from Tongtchew to Pekin was, I doubt not, a matter of general notification, from the prodigious concourſe of people who abſolutely covered the road; and, notwithſtanding the utmoſt exertions of the mandarins to keep it clear, the preſſure of the crowd was ſometimes ſo great, that we were obliged to halt, for at leaſt a quarter of an hour, to prevent the accidents which might otherwiſe have happened from the paſſage of the carts amid this continual and innumerable throng. I cannot but add to the obſtacles which we received from the curioſity of the Chineſe people, ſome ſmall degree of mortification at the kind of impreſſion our appearance ſeemed to make on them: for they no ſooner obtained a ſight of any of us, than they univerſally burſt out into loud ſhouts of laughter: and I muſt acknowledge, that we did not, at this time, wear the appearance of people, who were arrived in this country, in order to obtain, by every means of addreſs and preſſeſſion, thoſe commercial privileges, and political diſtinctions, which no other nation has had the art or power to accompliſh.

At Kiyeng-Foo, which is about nine miles from Tong-tchew, the whole embaſſy of all ranks alighted from their reſpective carriages: here the inferior department found tables ſpread for their refreſhment in an open yard, but covered, at the ſame time, with great plenty of cold meats, tea, fruits, &c. while the upper departments were ſerved with their regale in ſome adjoining rooms of a very miſerable appearance.

Before the proceſſion re-commenced its progreſs, the conducting mandarin, with his uſual attention, ordered ſome jonu, a harſh ſour white wine, to be offered to the attendants of the embaſſy, to fortify their ſtomachs, as a conſiderable time might probably elapſe before they would obtain any further refreſhment: we were then ſummoned to prepare for our departure, when a ſcene of confuſion and diſturbance took place among ourſelves, which, whatever its real effects might have been, was not calculated at leaſt to give any very favourable impreſſion of the manners and diſpoſition of the Engliſh nation. In ſhort, from the crowd of people aſſembled to ſee us, the neglect of a previous arrangement, and diſtribution, of the carts, together with the inconſiderate eagerneſs to ſet off among ourſelves, it was a matter of no inconſiderable difficulty for the mandarins to aſſign the people to their reſpective vehicles.

At eight o'clock we took our leave of the town of Kiyeng-Foo, which is a very conſiderable and extenſive place: the ſtreets are broad and unpaved, and the houſes are built altogether of wood; at leaſt in the part which we traverſed there were none conſtructed of any other materials. The ſhops made a very pleaſing appearance, and ſeemed to be well furniſhed with their reſpective commodities.

Of the country, which occupies the few miles from this place to Pekin, I have little to ſay, as the crowds of people that ſurrounded us, either intercepted the view, or diſtracted our attention.

At noon we approached the ſuburbs of the capital of China, and I cannot but feel ſome degree of regret, that no alteration was made in the ordinary

travelling, and ſhabby appearance, of the embaſſy, on ſuch an important occaſion. Whatever reaſons there might be to prevent that diſplay, which it poſſeſſed ſuch ample proviſions to make, I cannot pretend to determine, but our cavalcade had nothing like the appearance of an embaſſy, from the firſt nation in Europe, paſſing through the moſt populous city in the world.

On entering the ſuburbs, we paſſed beneath ſeveral very beautiful triumphal arches, elegantly painted, and enriched with various fanciful ornaments: the upper part of them was ſquare, with a kind of pent-houſe, painted of a green colour, and heightened with varniſh: from the inſide of this roof was ſuſpended the model of an accommodation junk, admirably executed, and adorned with ribands and ſilken ſtreamers.

Theſe ſuburbs are very extenſive; the houſes are of wood, the greater part of them two ſtories in height, and their fronts painted in various colours. The ſhops are not only commodious for their reſpective purpoſes, but have a certain grandeur in their appearance, that is enlivened by the very pretty manner in which the articles of the reſpective magazines are diſplayed to the view of the public, either to diſtinguiſh the trade, or to tempt the purchaſer.

We proceeded gradually through ſpacious ſtreets, which are paved on either ſide for the convenience of foot paſſengers. The whole way was lined with ſoldiers, and, indeed, without ſuch a regulation, it would have been impoſſible for the carriages to have proceeded from the crowd that attended us.

At two o'clock we arrived at the gates of the grand imperial city of Pekin, with very little ſemblance of diplomatic figure or importance: in ſhort, for I cannot help repeating the ſentiment, the appearance of the ambaſſador's attendants, both with reſpect to the ſhabbineſs of their dreſs, and the vehicles which conveyed them, bore a greater reſemblance to the removal of paupers to their pariſhes in England, than the expected dignity of the repreſentative of a great and powerful monarch.

Pekin, or as the natives pronounce it, Pitchen, the metropolis of the Chineſe empire, is ſituated in one hundred and ſixteen degrees of eaſt longitude, and between forty and forty-one degrees of north latitude. It is defended by a wall that incloſes a ſquare ſpace of about twelve leagues in circumference: there is a grand gate in the center of each angle, and as many leſſer ones at each corner of the wall: they are ſtrongly arched, and fortified by a ſquare building, or tower, of ſeven ſtories, that ſprings from the top of the gateway; the ſides of which are ſtrengthened by a parapet-wall, with port-holes for ordnance. The windows of this building are of wood, and painted to imitate the muzzle of a great gun, which is ſo exactly repreſented, that the deception is not diſcoverable but on a very near approach: there are nine of theſe windows to each ſtory on the front toward the ſuburbs. Theſe gates are double; the firſt arch of which is very ſtrongly built of a kind of free-ſtone, and not of marble, as has been related by ſome writers: the depth of it is about thirty feet, and in the middle of the entrance is a very ſtrong door of ſix inches thick, and fortified with iron bolts: this archway leads to a large ſquare which contains the barracks for ſoldiers, conſiſting of mean wooden houſes of two ſtories: on turning to the left, the ſecond gateway is ſeen, whoſe arch is of the ſame dimenſions and appearance as that already deſcribed, but without the tower.

At each of the principal gates there is a ſtrong guard of ſoldiers, with ſeveral pieces of ordnance placed on each ſide of the inner entrance. Theſe gates are opened at the dawn of day, and ſhut at ten o'clock at night, after which hour all communication with the city from the ſuburbs is impracticable; nor will they be opened on any

pretence, or occaſion whatever, without a ſpecial order from the principal mandarin of the city.

The four leſſer gates are defended by a ſmall fort built on the wall, which is always guarded by a body of troops.

The wall is about thirty feet high, and ten feet in breadth on the top: the foundation is of ſtone, and appears about two feet from the ſurface of the earth: the upper part is of brick, and gradually diminiſhes from the bottom to the top. Whether it is a ſolid ſtructure, or only filled up with mortar or rubbiſh, is a circumſtance concerning which I could not procure any authentic information.

This wall is defended by outworks and batteries, at ſhort diſtances from each other; each of them being ſtrengthened by a ſmall fort, though none of the fortifications are garriſoned but thoſe which are attached to the gates; and though there is a breaſtwork of three feet high, with portholes for cannon, which crowns the whole length of the wall, there is not a ſingle gun mounted upon it. On the ſide toward the city, it is, in ſome places, quite perpendicular; and in others, forms a gentle declivity from the top to the ground. It is cuſtomary for bodies of ſoldiers to patrole the wall every night during the time that the emperor reſides in the city, which is from October to April, when his imperial majeſty uſually goes to a favourite palace in Tartary. From its perfect ſtate of repair and general appearance, I ſhould rather ſuppoſe it to be of modern erection, and that many years cannot have paſſed away ſince it underwent a complete repair, or was entirely rebuilt.

The diſtance from the ſouth gate, where we entered, to the eaſt gate, through which we paſſed out of the city, comprehends, on the moſt moderate computation, a courſe of ten miles. The principal ſtreets are equally ſpacious and convenient, being one hundred and forty feet in breadth, and of great length, but are only paved on each ſide for foot paſſengers. The police of the city, however, ſpares no pains to keep the middle part clean, and free from all kind of nuiſance; there being large bodies of ſcavengers continually employed for that purpoſe, who are aſſiſted, as well as controlled, in their duty by ſoldiers ſtationed in every diſtrict, to enforce a due obſervance of the laws that have been enacted, and the regulations which have been framed, for preſerving civil order among the people, and the municipal economics of this immenſe city. I obſerved, as we paſſed along, a great number of men who were ſprinkling the ſtreets with water, in order to lay the duſt, which, in dry weather, would not only be troubleſome to paſſengers, but very obnoxious alſo to the ſhops; whoſe commodities muſt be more or leſs injured, were it not for this beneficial and neceſſary precaution.

Though the houſes at Pekin are low and mean, when conſidered with reſpect to ſize and domeſtic accommodation, their exterior appearance is very handſome and elegant, as the Chineſe take a great pride in beautifying the fronts of their ſhops and dwellings; the upper part of the former is ornamented with a profuſion of golden characters; and on the roofs of the latter are frequent galleries, rich in painting and other decoration; where numerous parties of women are ſeen to amuſe themſelves according to the faſhion of the country. The pillars, which are erected before the doors of the ſhops, are gilded and painted, having a flag fixed at the top, whoſe characters ſpecify the name and buſineſs of the owner: tables are alſo ſpread with commodities, and lines attached to theſe pillars are hung with them.

I obſerved a great number of butchers ſhops whoſe mode of cutting up their meat reſembles our own; nor can the markets of London boaſt a better ſupply of fleſh than is to be found in Pekin. My curioſity induced me to inquire the prices of their

meat, and on my entering the ſhop, I ſaw on a ſtall before it an earthen ſtove, with a gridiron placed upon it; and on my employing a variety of ſigns to obtain the information I wanted, the butcher inſtantly began to cut off ſmall thin ſlices of meat, about the ſize of a crown piece, and broiled as faſt as I could eat them. I took about a dozen of theſe ſlices, which might altogether weigh ſeven or eight ounces; and when I paid him, which I did by giving him a ſtring of caxee, or ſmall coin, he pulled off, as I ſuppoſe, the amount of his demand, which was one conderon, or ten caxee, the only current money in the empire. I ſaw numbers of people in other butchers ſhops, as I paſſed along, regaling themſelves with beef and mutton in the ſame manner.

The houſes for poreelain utenſils and ornaments are peculiarly attractive, having a row of broad ſhelves, ranged above each other, on the front of their ſhops, on which they diſpoſe the moſt beautiful ſpecimens of their trade in a manner full of fancy and effect.

Beſide the variety of trades which are ſtationary in this great city, there are many thouſands of its inhabitants who cry their goods about, as we ſee in our own metropolis. They generally have a bamboo placed acroſs their ſhoulders, and a baſket at each end of it, in which they carry fiſh, vegetables, eggs, and other ſimilar articles. There are alſo great numbers of hawkers and pedlars, who go about with bags ſtrapped on their ſhoulders like a knapſack, which contain various kinds of ſtuff goods, the folds of which are expoſed to view. In ſelling theſe ſtuffs, they uſe the cubit meaſure of ſixteen inches. Barbers alſo are ſeen running about the ſtreets in great plenty, with every inſtrument known in this country for ſhaving the head and cleanſing the ears: they carry with them for this purpoſe a portable chair, a portable ſtove, and a ſmall veſſel of water, and whoever wiſhes to undergo either of theſe operations, ſits down in the ſtreet, while the operator performs his office, for which he receives a mace. To diſtinguiſh their profeſſion, they carry a pair of large ſteel tweezers, which they open with their fingers, and let them cloſe again with ſome degree of violence, which produces a ſhrill ſound that is heard at a conſiderable diſtance; and ſuch is their mode of ſeeking employment. That this trade in China is a very profitable one may be pronounced, becauſe every man muſt be ſhaved on a part of the head where it is impoſſible to ſhave himſelf.

In ſeveral of the ſtreets I ſaw perſons engaged in ſelling off goods by auction: the auctioneer ſtood on a platform ſurrounded with the various articles he had to ſell; he delivered himſelf in a loud and bawling manner; but the ſmiling countenances of the audience, which was the only language I could interpret, ſeemed to expreſs the entertainment they received from his harangue.

At each end of the principal ſtreets, for there are no ſquares in Pekin, there is a large gateway fancifully painted, with a handſome roof coloured and varniſhed; beneath which the name of the ſtreet is written in golden characters: theſe arches terminate the nominal ſtreet, or otherwiſe there would be ſtreets in ſome parts of the city of at leaſt five miles in length, which are formed into ſeveral diviſions by theſe gateways. They are very handſome, as well as central objects, and are railed in on each ſide from the foot pavement.

The narrow ſtreets are encloſed at each end with ſmall lattice gates, which are always ſhut during the night; but all the conſiderable ſtreets are guarded both night and day by ſoldiers, who wear ſwords by their ſides, and carry long whips in their hands, to clear the ſtreets of any inconvenient throng of people, and to chaſtiſe ſuch as are refractory in ordinary decorum or good behaviour.

Notwithſtanding the vaſt extent of this place, there is little or no variety in their houſes, as I have before obſerved, but in the colours with which they are painted; they are in reality nothing better than temporary booths, erected entirely for exterior ſhew, and without any view to ſtrength or durability. It is very rare, indeed, to ſee a houſe of more than one ſtory, except ſuch as belong to mandarins, and even thoſe are covered, as it were, by the walls which riſe above every houſe or building in Pekin, except a lofty pagoda, and the imperial palace.

There are no carriages ſtanding in the ſtreets for the convenience of the inhabitants, like our hackney coaches in London: the higher claſſes of people keep palanquins, and others of leſs diſtinction have covered carts drawn by a horſe or mule.

The opinion, that the Chineſe women are excluded from the view of ſtrangers, has very little, if any, foundation, as among the immenſe crowd aſſembled to ſee the cavalcade of the Engliſh embaſſy, one fourth of the whole at leaſt were women; a far greater proportion of that ſex than is to be ſeen in any concourſe of people whom curioſity aſſembles in our own country: and if the idea is founded in truth, that curioſity is a peculiar characteriſtic of the female diſpoſition in Europe, I ſhall preſume to ſay that, from the eagerneſs which we obſerved in the looks of the Chineſe women as we paſſed by them, that the quality which has juſt been mentioned is equally prevalent among the fair ones of Aſia.

The women we ſaw on our paſſage through Pekin poſſeſſed, in general, great delicacy of feature, and fair ſkins by nature, with which, however, they are not content, and therefore whiten them with coſmetics; they likewiſe employ vermilion, but in a manner wholly different from the application of rouge among our European ladies, for they mark the middle of their lips with it by a ſtripe of its deepeſt colour, which, without pretending to reaſon upon it, certainly heightened the effect of their features. Their eyes are very ſmall, but powerfully brilliant, and their arms extremely long and ſlender. The only difference between the women of Pekin, and thoſe we had already ſeen, as it appeared to us, was that the former wear a ſharp peak of black velvet or ſilk, which is ornamented with ſtones, and deſcends from the forehead almoſt between their eyes; and that their feet, free from the bandages which have already been mentioned, were ſuffered to attain their natural growth.

When we had paſſed through the eaſtern gate of the city, ſome confuſion having ariſen among the baggage carts, the whole proceſſion was obliged to halt. I, therefore, took the opportunity of eaſing my limbs, which were very much cramped by the inconvenience of the machine, and perceiving a number of women in the crowd that ſurrounded us, I ventured to approach them; and, addreſſing them with the Chineſe word *Cbeu ah*, (or beautiful) they appeared to be extremely diverted, and gathering round me, but with an air of great modeſty and politeneſs, they examined the make and form of my clothes, as well as the texture of the materials of which they were compoſed. When the carts began to move off, I took leave of theſe obliging females by a gentle ſhake of the hand, which they tendered to me with the moſt graceful affability; nor did the men, who were preſent, appear to be at all diſſatisfied with my conduct, but, on the contrary, expreſſed, as far as I could judge, very great ſatisfaction at this public attention I paid to their ladies. It appears, therefore, that in this city, the women are not diveſted of a reaſonable portion of their liberty, and, conſequently, that the jealouſy attributed ſo univerſally to the Chineſe men, is not a predominant quality, at leaſt, in the capital of the empire.

Among other objects which we ſaw in our way, and did not fail to attract our notice, we met a funeral proceſſion, which proved to be a very ſtriking and ſolemn ſpectacle: the coffin is covered by a canopy decorated with curtains of ſatin, enriched with gold and flowers, and hung with eſcutcheons: it is placed on a large bier or platform, and carried by at leaſt fifty or ſixty men, who ſupport it on their ſhoulders with long bamboos croſſing each other, and march eight abreaſt with ſlow and ſolemn ſtep. A band of muſic immediately follows, playing a kind of dirge, which was not without a mixture of pleaſing tunes: the relations and friends of the deceaſed perſon then followed, arrayed in black and white dreſſes.

Having paſſed through the eaſtern ſuburbs of the city, we entered into a rich and beautiful country, when a ſhort ſtage of about four miles brought us to one of the emperor's palaces named Yeumen-man-yeumen, where we arrived about five o'clock in the afternoon, oppreſſed with fatigue from the extreme heat of the day, and the various impediments which obſtructed our paſſage, ariſing from the immenſe crowds of people that may be ſaid to have filled up the whole way from Tong-tchew to this place, a journey of thirty miles.

In a ſhort time after our arrival, we received a very ſcanty and indifferent refreſhment, when the whole ſuite retired to ſleep off the fatigue of the day.

THE BRITISH MUSE.

PROLOGUE

To the Farce of CROTCHET LODGE.

Written by Dr. HOULTON.

Spoken by Mr. FAWCETT, in the Character of Nimble, diſguiſed as a Sailor with a Wooden Leg.

(Speaking as he enters.)

ZOUNDS, meſs-mate author, if you muſt have tricks,
Make me at once a 'Devil on two Sticks,'
Not a poor imp on one, from home caſt out,
Juſt like a beggar thus—to ſtump about.
(Coming forward.)
Good-folk, I pray you hear the lubber's ſhift,
He ſays, he does me favour by this gift,
(pointing to his wooden leg.)
As many a tar, zealous for Britain's good,
Glories to ſplice his hull with honour's wood;
And e'en commanders, in their country's cauſe,
Wear this proud trophy 'midſt the world's applauſe;
And, cou'd they give the foe a harder ſtroke,
Wou'd wiſh each limb was made of Engliſh oak;
Then cheer, my boys! this prayer you all will greet,
O, may Howe meet again the Gallic fleet!
Wiſpering our poet, I preſum'd to judge
He meant his round-top by his Crotchet Lodge;
No, he replied—the title I preſent ye,
Deſcribes the cabin of a cognoſcenti,
Who'll give the Crotchet ſcience, in full ſcore,
Such terms as amateurs ne'er heard before;
With whom exhibits, I ſhall hint, my lad,
A ſpouting publican, ſtark-ſtaring mad;
Wou'd rather draw one ſentence from a play,
Than fifty corks from buſineſs or for pay:
Sir, ſir, cried I—Crotchets are uneonfin'd,
And reign thro' life's great veſſel here—the mind.
Brothers a-head, you ſmile—but I'll maintain
We've all our own dear Crotchets of the brain;
Yes, meſſrs. critics, tho' you ſneer, 'tis true,
For Crotchets damnable belong to you;
And ladies—but the faſhions I'll not preſs,
Had you a thouſand Crotchets in your dreſs;
Ne'er heed it, girls—dreſs eaſy, ſpruce and light,
D—mme, dreſs as you pleaſe, you're always right;
A ſailor loves to ſee you neat and trim,
And waiſt, or no waiſt, is the ſame to him.

You giggle, beau—your Crotchet from the moon,
Is to appear a perfect pantaloon;
Why, if the carmagnols shou'd chance to meet you,
They may pop, and pop again—but never hit you;
So Bond-street sailors, stay at home, I beg,
You'd do no honour to a wooden leg!
'One fashion should prevail, when the bright fair,
'Of Brunswick comes to bless proud Albion's heir;
'Rig out your colours, ev'ry topmast bind,
'With gaudy streamers, floating on the wind;
'This is no idle crotchet of the brain,
'But grace and honour in fair beauty's train;
'For brave Britannia claims her as her own,
'And hails her lineal daughter of our throne.'
No, more, but humbly for our bard to pray,
You'll not think flat the Crotchets of his play;
He now is practising both shake and quaver,
Grant him safe anch'rage in your port of favour!

[The lines marked with inverted commas were omitted in the delivery.]

PROLOGUE

To the Comedy of LIFE's VAGARIES.

Written by Mr. TAYLOR.

Spoken by Mr. MIDDLETON.

'TIS strange that authors, who so rarely find
Their pray'rs can move an audience to be kind,
Still send, with piteous tone and look forlorn,
The prologue forth to deprecate your scorn.
Such doleful heralds, which would fain appear
The timid struggles of a modest fear,
The surly critic views with jealous spleen,
As the dull presage of the coming scene;
In vain, the dread hostility to calm,
E'en potent flatt'ry tries her soothing balm,
Pity's a crime his lofty soul disdains,
And his pride feasts upon the poet's pains.
Yet now no critic rancour need we fear,
For lib'ral candour holds her empire here,
Candour, who scorns for little faults to pry,
But looks on merits with a partial eye.
And sure a bard, whose muse so oft has found
The happy pow'r to kindle mirth around;
Though, in her sportive moods, averse to grace
The rigid forms of action, time, and place;
While gen'rous objects animate her view,
May still her gay, luxuriant course pursue;
For, 'mid her whims, she still has shown the art,
To press the useful moral on the heart;
With just contempt the worthless to discard,
And deal to Virtue its deserv'd reward.
So aim'd the bard * (if haply we may dare
Our humble scenes with noblest strains compare)
The bard, whose favour'd muse could joy afford,
That eas'd the cares of Rome's imperial lord;
Who, in her satire frolicsome and wild,
Gave vice the deepest wounds when most she smil'd.

On Leaving the COUNTRY early in the SPRING.

[From Miss Cliffall's Poetical Sketches.]

WHILE joy re-animates the fields,
And spring her odorous treasures yields;
While love inspires the happy grove,
And music breaks from every spray;
I leave the sweet retreat I love,
Ere blos'ming hawthorn greets the May;
Sad destiny! O! let me plaintive pour
O'er the unopen'd bud an unrefreshing shower.

To yonder hills, which bound the sight,
Where blushing eve dissolves in night,
To the wild heath, o'er which the gale
Bleak wafts each sweet perfume of spring,
And to the weed-grown briary vale
Sorrowing the parting lay I sing;
'Sweet flowers of spring, enlivening day,
Nature's unfolding charms fleet fast away.'
At morn I've view'd the glimmering light
Break from the east, and chase the night;
Then stray'd amid the frosty dews
While soaring larks shrill chanting rise,
And mark'd the thousand varying hues
That streak the glowing morning skies.

* Horace.

'Sweet air of ſpring, enlivening day,
Nature's unfolding charms fleet fair away.'

No daiſied lawns ſhall greet my eye,
Reluctant from their ſweets I fly;
No more, wild wandering o'er the plains,
I ſhare each innocent delight;
The tinkling flocks, the woodland ſtrains,
The rural dance no more invite.
Sad deſtiny! O! let me plaintive pour
O'er the unopen'd bud an unrefreſhing ſhower.

ADDRESS TO FANCY.

OFT has thy wild and glowing form
Sweet Fancy, maid divine!
Been hail'd where nature's pencil warm,
Bade fair creation ſhine.

The ſheltering wood, the fragrant bow'r,
The deep romantic vale;
The ſteep rock where the blue mills low'r,
And evening ſhadows fail.

The ſea's ſublime and awful roar,
The murmurs of the ſoothing ſtream;
Whence the ſweet horns their ſoft notes pour,
The pale moon's ſilv'ry beam;

Not even theſe inſpiring ſcenes,
Can rouze the poet's art;
Till breathing Fancy kindly deigns,
With her rich ſtore to warm his heart.

O deign that energetic *flame*,
Sweet Fancy, I conjure, impart;
So, warm'd by thee, my ready thoughts ſhall ſoar,
And Peace and Fancy ſhare my grateful heart.

When the fair ſun's prolific beams,
No more illume creation's brow;
But winter chill deforms the plains,
And checks the ſoul's impaſſion'd glow;

I'll woo thy bright, thy genial aid,
O ſweet enthuſiaſt dear!
'Mid ſolitude and ſilence dreary reign,
My viſions bright the gloomy hour ſhall cheer.

Taught by thy ſmile, my ready thoughts ſhall trace
Objects and ſcenes more bright than infant May;
And 'midſt the clouds that joy and ſummer chaſe,
Let not a ſtorm obſcure the mental ray.

THE THEATRE.

ON Monday, April 6, a ſplendid drama, entitled WINDSOR CASTLE, or The FAIR MAID of KENT, was performed, for the firſt time, at Covent-garden theatre.

The dialogue and ſongs were written by Mr. Pearce, author of many ſucceſsful productions; the overture is compoſed by the celebrated Hadyn, and the muſic of the piece in general is the work of the ingenious Saloman. The nuptials of the royal pair have evidently ſuggeſted the idea from which the preſent drama has originated.

The ballet was compoſed by Noverre, whoſe talents in the province of dancing need no eulogium on the preſent occaſion.

The events of this drama are ſuppoſed to have happened in the reign of Edward the third, and though not founded upon hiſtorical records, it is the vehicle of charming muſic, and great magnificence of ſcenery.

The marriage of Peleus and Thetis is the ſubject of the incidental ballet, and this ſubject is aptly choſen, as that marriage was ſuppoſed to be particularly acceptable to the heathen deities, who perſonally grace the ceremony. The piece was received with every teſtimony of approbation.

The following is a ſpecimen of the airs.

GLEE.—Meſſrs. INCLEDON, BOWDEN, and LAMBOM.

SHADES of Windſor, hills, and levels,
Sacred to the moon-light revels
Of briſk Oberon the fairy,
And his vaſſals—light and airy:
Other minſtrelſy and mirth,
Thro' your wild retreats ſhall ſound;
O'er the favour'd ſpot of earth,
Many a feſtive train ſhall bound:
And the foreſt wide ſhall ring
To the roundelays we ſing.

SONG:—Mr. INCLEDON.

HER lovely eye of heav'nly blue,
A mild intelligence conveys;
Her ſweet lip wears the roſe's hue,
A charm o'er every feature plays;
Light are her locks—and unconfin'd,
In varying forms they kiſs the wind!

The matchleſs beauties thus poſſeſt,
From ſoft refinement ſeem'd more bright;
As jewels with a poliſh dreſt,
Emit a purer glow of light:
And every grace which round her ſhone,
Reveal'd her kindred to the throne!

RECALL *of Earl* FITZWILLIAM *from the Government of* Ireland.

THE ſudden diſagreement between earl Fitzwilliam and the Britiſh cabinet, has raiſed a violent ferment in Ireland, and excited great anxiety here. His lordſhip, ſolicitous for an early vindication of his conduct, addreſſed two letters to the earl of Carliſle, which ſoon found their way to the Dublin preſs. In intereſt and importance, the firſt letter, perhaps, is not equal to the ſecond, which we ſhall inſert at length.

The diſmiſſal of the Beresford junto forms the prominent feature of this firſt letter. It appears, that, previouſly to earl Fitzwilliam's departure from this country, Mr. Pitt and the duke of Portland knew, and did not diſapprove of his lordſhip's intention to make ſuch arrangements as he conceived were neceſſary to the proſperity of his adminiſtration. In purſuance of this intention earl Fitzwilliam acted; the power of the Beresfords was to be deſtroyed, but their penſions and their emoluments were to be untouched.

The attorney-general was to have the reverſion for himſelf and ſon of 2300l. per annum, a peerage for his family, and for himſelf the firſt chief's ſeat on the bench that ſhould become vacant. The ſolicitor-general was to have a compenſation amply adequate to his ſervices and pretenſions, and Mr. Cooke a penſion of 1,200l. a year.

The remainder of the letter, which relates to the catholic buſineſs, proves that the entire emancipation of the catholics was a principle of which Mr. Pitt himſelf approved; and clears earl Fitzwilliam from the imputation of unneceſſary and indecent haſte in bringing forward that meaſure.

The ſecond letter is entitled,

A Letter from a Venerated Nobleman who recently retired from this Country, to the Earl of Carliſle; explaining the Cauſes of that Event.

My dear Lord,

As I find that the ſeveral ſubjects of crimination that have been urged againſt me, are ſettling all into one point; and that, if I am to judge of the declaration and proceedings of Mr. P—'s friends, from the Engliſh newſpapers generally known to ſpeak the language of government, the grand head of attack is to be—the miſchief I have cauſed by agitating the catholic queſtion; I think it eſſential to trouble you once more with my defence, and to ſubmit an obſervation to you, which did not appear ſo eſſential to me at the time I was writing to you laſt.—I then contented myſelf with referring you to my correſpondence with the cabinet of England on the catholic meaſure:—I ſhall now myſelf enter into a review of that correſpondence.—It contains a full and adequate vindication of my conduct, and will prove two things:—Firſt, that the catholic queſtion entered for nothing into the real cauſe of my recall; and ſecondly, that from the very beginning, as well as in the whole proceedings of that fatal buſineſs, for ſuch I fear I muſt call it, I acted in perfect conformity with the original outline ſettled between me and his majeſty's miniſters, previous to my departure from London.

From a full conſideration of the real merits of the caſe, as well as from every information I had been able to collect of the ſtate and temper of Ireland, from the year 1793, I was decidedly of opinion that, not only ſound policy, but juſtice required, on the part of Great Britain, that the work which was left imperfect at that period, ought to be completed, and the catholics relieved from every remaining diſqualification. In this opinion the d— of P——d uniformly concurred with me; and when this queſtion came under diſcuſſion, previous to my departure for Ireland, I found the cabinet, with Mr. P— at their head, ſtrongly impreſſed with the ſame conviction. Had I found it otherwiſe, I never would have undertaken the g——t. I at firſt propoſed that if the additional indulgences ſhould be offered from the throne, the very beſt effects would be ſecured by this act of unſolicited graciouſneſs, and the embarraſſing conſequences, which it was natural to foreſee, muſt reſult from the meaſures being left open for any volunteer to bring forward, would be timely and happily avoided: but to this propoſal objections were ſtated that appeared of ſufficient weight to induce the adoption of another plan.—I conſented not to bring the queſtion forward on the part of g——t, but rather to endeavour to keep back, until a period of more general tranquillity, when ſo many material objects might not preſs upon the Government; but as the principle was agreed on, and

the neceſſity of its being brought into full effect was univerſally allowed, it was at the ſame time reſolved that, if the catholics ſhould appear determined to ſtir the buſineſs, and to bring it before parliament, I was to give it a handſome ſupport on the part of g——t.

I was no ſooner landed, and informed of the real ſtate of things here, than I found that this queſtion would force itſelf upon my *immediate* conſideration: faithful to the ſyſtem that had been agreed on, and anxious to obtain the object that had been committed to my diſcretion, I loſt not a moment in gaining every neceſſary information, or in tranſmitting the reſult to the Britiſh cabinet: as early as the 8th of January laſt, I wrote to the ſ——y of ſ—e on the ſubject: I told him that I trembled about the catholics;—that I had great fears about keeping them quiet for the ſeſſion—that I found the queſtion was already in agitation—that a committee was appointed to bring forward a petition to parliament, praying for a repeal of all remaining diſqualifications: I mentioned my intentions of immediately uſing what efforts I could, to ſtop the progreſs of it, and to bring the catholics back to a confidence in government:—I ſtated the ſubſtance of ſome converſation I had on the ſubject with ſome of the principal perſons of the country: it was the opinion of one of theſe, that if the poſtponing of the queſtion could not be negociated on *grounds of expediency*, it ought not to be reſiſted by government; that it ſhould be put off for ſome time, was allowed to be a deſirable thing, but the *principle* of *conceſſion* was, at the ſame time, ſtrongly inſiſted on, and forcibly inculcated, as a matter not only wiſe, but neceſſary to the public tranquillity.

From the day of the date of this letter, I unremittingly applied myſelf to the collecting of further information: I had heard that the committee had prepared an addreſs to me: before I ſhould receive it, I wiſhed to know the opinion of thoſe whom the committee called the *ſeceders*,—the noblemen and principal landed gentlemen of that perſuaſion.

In a letter of the 15th of January, I acquainted the ſ——y of ſ—e of the reſult of theſe conferences, and of the progreſs of the buſineſs, ſubſequent to my former letter:—I told him that in the abſence of the nobleman who was conſidered as the head of the ſeceders, I had ſent for a perſon of the moſt tried and acknowledged moderation among them, and of the firſt conſequence and property. I found by him (which the nobleman above alluded to afterward confirmed) that he, and every perſon of his deſcription, were in perfect union with the committee; that they all decidedly looked to the ſame object; that they were determined never to loſe ſight of it: that provided it ſhould be obtained, they had no objection that Mr. Byrne, or the other members of the committee, ſhould have the honour of taking the lead in it. I mentioned my having, after this converſation, received the addreſs; that in my anſwer, which I tranſmitted, I had endeavoured to keep clear of all ſpecific engagements whatever; though at the ſame time, avoiding every thing that could be conſtrued into a rejection of what they were *all* looking to; the repeal of the remaining reſtrictions, and (what comes immediately to the point) I concluded by declaring—that I ſhould not do my duty, if I did not diſtinctly ſtate it as my opinion, that, not to grant cheerfully, on the part of government, *all* the catholics wiſhed for, would not only be exceedingly impolitic, but perhaps dangerous; that in doing this *no time was to be loſt*;—that the buſineſs would be *preſently* at hand—and that the firſt ſtep I took would be of infinite importance;—that if *I received no very peremptory* inſtructions to the contrary, *I ſhould acquieſce*. I meant—as well *in the time*, as in the mode of proceeding, and the *extent of the demands*;—for, as a *meaſure* conſidered generally, I could conceive no neceſſity of waiting for any new inſtructions, on which to decide: of this I reminded the ſ——y of ſ—e, 'convinced, I ſaid, as we all were, of the neceſſity, as well as fitneſs of the meaſure taking place at no diſtant period; I was decidedly of opinion, that it ought no longer to be deferred.' The ſtate of the country required this; and the diſpoſition of the catholics, among whom heſitation on the part of government might produce miſchiefs to a degree beyond calculation. You will not forget that all this paſſed within the firſt fortnight after my arrival, and before the meeting of parliament.—Thus early were miniſters in poſſeſſion of the opinion and determination which, in the exerciſe of my diſcretionary powers, I had formed on the ſubject:—they knew that the queſtion was in agitation—that a petition to parliament had been determined on, and was to be immediately preſented; they were acquainted with the extent of the catholic demands;—they knew that it could not be

kept back;—that no time was to be loſt, and that if I did not receive their inſtructions to the contrary, I ſhould, in the ſpirit of the ſyſtem that had been agreed on, immediately acquieſce to the full extent of the catholic expectations.

This then was the time for his majeſty's miniſters to come forward with their fears and their alarms, if they had ſo ſuddenly changed their minds on the ſubject; and if they had at length *diſcovered* that this, which was to be both with their knowledge and conſent, a leading meaſure of my adminiſtration, led to conſequences 'that could not be contemplated without horror and diſmay,' this was the time for them to inform me of this change;—they knew that it was my opinion that not a moment was to be loſt; and conſequently, that, if I did not receive peremptory inſtructions to the contrary, I was prepared to conſent, without an appearance of heſitation, that the meaſure ſhould go forward:—Did they ſend me thoſe peremptory inſtructions?—Did they ſtate to me, as they afterward did, that it was the unanimous opinion of the cabinet—that I ſhould ſtop ſhort;—that I ſhould *abſtain from all engagements, or even encouraging language*, in that quarter, until I ſhould receive their further inſtructions?

Not a word of the kind: my regular correſpondence went on; I received frequent letters from the f——y of f—e, and not even a hint was thrown out on the ſubject.

In a letter of the 7th of January, I propoſed the removal of Mr. W——, on certain terms of accommodation, in order to make room for Mr. G—— P—— to act as my a——y g——l: this letter went by the ſame mail with my letter of the 8th, to which I have alluded above: on the 13th of January, the f——y of f—e writes me an anſwer to this very letter:—He informs me that the king had conſented to Mr. W——'s peerage, which was one of the terms I had there propoſed; and touches lightly upon an objection againſt another, (that of holding out to Mr. W—— the promiſe of ſucceeding to a chief juſtice's place), on the ſuppoſition that he was to quit his practice at the bar; a ſuppoſition, by the way, that never had the ſmalleſt foundation.—But not a word on the catholic queſtion—not a ſingle obſervation on what I ſtated ſo ſtrongly, reſpecting my fears of not being able to keep it quiet during the ſeſſion.

The 2d of February came, and of that date I find a ſecond letter from the ſecretary of ſtate on the ſubject of Mr. W——; but here again he confined himſelf to that ſubject alone; and my letter of the 15th of January, which muſt have been ſo many days in his hands, was not even noticed.—That letter, to which I ſo earneſtly required, and which in itſelf called for an explicit, an immediate and peremptory anſwer,—that letter, from which they knew, that if not *timely* inſtructed, and timely checked, the catholic queſtion would preſently receive from me a cheerful acquieſcence; yet in the interval, from the receipt of it, till the 2d of February, although he wrote twice on other ſubjects, he ſays not a word of the precipitancy with which I was plunging into a matter ſo big with danger to the empire; not even a hint that I ſhould proceed with more caution or circumſpection in a meaſure that was to ſubvert the conſtitution and eſtabliſhment in this kingdom: the fact was, that neither he nor the cabinet entertained at that time any ſuch fears—they then apprehended no ſuch danger. It was another buſineſs that opened their eyes to all the miſchiefs of my councils;—a buſineſs that ſoon rung ſuch an alarm as brought down upon me that tempeſt of fears, and terrors, and remonſtrances, under which I have ſunk.

At the cloſe of the letter of the 15th of January, alluded to above, I had mentioned the diſmiſſal of Mr. B——d. This intelligence does not ſeem to have cauſed the ſmalleſt degree of alarm in the breaſt of the f——y of f—e.

In his letter of the 2d of February, when it appears that he muſt have received the information for ſeveral days, he takes not the leaſt notice of it; and it further appears, from a letter of Mr. Windham's to lord Milton, that his grace was equally unacquainted with the alarm which the intelligence of the tranſaction conveyed indirectly to Mr. P— by Mr. B——d himſelf, had cauſed in that quarter.—However this may have been, the attack upon me was, in the mean time, meditating, although perhaps unknown to his grace.

This letter of Mr. Windham's was the firſt intimation I received of the leaſt diſcontent among my colleagues in England, at my conduct ſince my arrival.—The d— of P——d had, indeed, in one letter, ſtated ſome objections about the terms of Mr. W——'s removal; and in another about Mr. G—— P——y's appointment; but nothing that could indicate diſcon-

tent: but Mr. Windham's letter was ſoon followed by one from Mr. P— on the 9th of February: that gentleman wrote to me to expoſtulate on the diſmiſſal of Mr. B——d, and on the negociations with Mr. W——e and Mr. T——r. This formed the whole matter of his letter, and to this alone he confined his remonſtrances; yet he had a fair opportunity of touching on the meaſures of my government; but he concluded his letter by making an apology 'for interrupting my attention from the many important conſiderations of a different nature, to which all our minds ought to be directed.'

The taſk of bringing forward the catholic queſtion, he had, it ſeems, committed to another. By the ſame mail, and in a letter dated the 8th, the very day before Mr. P— had written to me, came a letter from the ſ——y of ſ—e, touching *at length*, on this important ſubject, and bringing it, for *the firſt time*, into play, as a queſtion of any doubt or difficulty with the Britiſh cabinet:—then, as if the queſtion had been ſtarted for the firſt moment between us, as if it never had been the ſubject of any former conſultation, plan or arrangement whatever, he writes —of enabling the king's miniſters to form their judgment, as to the *policy*, *expediency*, *ſafety*, and *neceſſity* of that meaſure:—then, as if he had never before heard from me on the ſubject, he cautions againſt committing myſelf by *engagements*, or even by *encouraging language*, (ſo minute is his grace) to give my countenance to the immediate adoption of this meaſure. Then, for the firſt time, it appears to have been diſcovered, that the deferring it would be not merely an expediency, or a *thing to be deſired* for the preſent—but 'the means of doing a greater ſervice to the Britiſh empire than it has been capable of receiving ſince the revolution, or at leaſt ſince the union.'—All former opinions, all former diſcuſſions, all former agreements, the leading principle of our being all convinced of the neceſſity, as well as fitneſs of the meaſure taking place at no diſtant period, of which I reminded the miniſters in my letter of the 15th of January—all were forgotten; and he feels it his duty, *for the firſt time*, in conſequence of the diſcuſſion of this queſtion in the cabinet *the day before*, to exhort me to uſe thoſe efforts which I had expreſſed an intention of trying;—efforts, of the efficacy of which I had expreſſed the ſtrongeſt doubts, on the 8th of January, when I firſt mentioned my intention of trying them—efforts, every hope from which I had relinquiſhed on the 15th; when I warned them of the neceſſity of immediately giving way, when I earneſtly called upon them for peremptory inſtruction, which if I ſhould not receive, I ſhould acquieſce—efforts, which they knew, from the whole ſeries of my correſpondence, it was impoſſible ever to attempt, without evident and certain danger.

From this period every thing went on rapidly toward my removal.— From my knowledge of the perſon I had to deal with, I was reſolved myſelf to bring the buſineſs to the real point at iſſue between us, and to leave him no ſubterfuge:—Cruelly as the d— of P——d has treated me, I feel no difficulty to ſay, that his judgment was deceived before he abandoned me: on whatever grounds he has ſuffered himſelf to be induced to change his former opinions reſpecting the politics of this country, and the characters and views of its principal perſonages, he did change thoſe opinions; and, in conſequence of that change alone, he has been driven to conſent to the meaſure of my inſtant recall. But I was not ſo deceived: I combined all the circumſtances which I have detailed to you in this letter: I perceived immediately the ſcheme that was laid againſt me; and I reſolved on the only means I ſaw left, to bring the matter to ſo ſpeedy an iſſue as ſhould preſerve my honour and vindicate my public character. In my anſwer to Mr. P—, a copy of which I ſend you, and which I wrote the very night I received his letter, I entered fully into the ſubject of my diſmiſſals. I ſtated, as you will ſee, my reaſons for having determined on them, as well as for adhering to them when once reſolved on;—reaſons, of which, from your knowledge of this country, you will, I am ſure, admit the juſtice: I then put it to himſelf to determine for me, and the efficacy of my government:—I left to him to make his choice between Mr. B—— and me.

The ſame night, I wrote to the d— of P——d: I teſtified my ſurpriſe to him that after ſuch an interval of time, and after the various details which I had tranſmitted to him, adviſing him of the hourly increaſing neceſſity of bringing forward the catholic queſtion, and the impolicy and danger of reſiſting or even heſitating about it, I ſhould now be preſſed *for the firſt time*, to defer the queſtion till ſome future occaſion. I refuſed to be the par-

for to run the riſk of ſuch a determination; I refuſed to be the perſon to raiſe a flame in the country, that nothing ſhort of arms could be able to keep down: I then alluded to Mr. P—'s letter; appealed to his knowledge of the ſituation of a l— l——; and left him to determine, whether, if he was not to be ſupported, he ought not to be removed. Theſe letters I wrote on the 14th of February.—Shortly after came two official letters from the d— of P——d, dated the 16th, in which he enters into a long detail of the various points of view in which the cabinet wiſhed to have the queſtion of the catholics conſidered: with theſe came a private letter of his own, dated the 18th. In this his grace dwells moſt particularly on the neceſſity of having information ſubmitted to them, on all theſe points, and a detailed plan of all the additional advantages intended to be conceded to the catholics: he obſerves, that if the conſideration of this great queſtion could be deferred till the peace was eſtabliſhed, he ſhould have no doubt but that it would be attended with advantages, which perhaps are not to be hoped for in any other ſuppoſeable caſe; but he added (I beg you will attend to this) 'that *it was juſt, going too far, to infer* from any thing that he had ſaid, that *I was deſired to undertake the taſk of deferring it to that period.* If the cabinet were to accede, what they deſired was, to be juſtified in that acceſſion by a free and impartial inveſtigation of facts, of circumſtances and of opinions; among which, as of reaſon, mine would have the moſt deciſive weight; and as I had expreſſed a wiſh to have the mode conſidered in England, while it was ſtill within my reach to have it limited or modified, before the bill was introduced, and before the plan was known to the catholics, he wiſhed to have this plan, and the heads of the bill, tranſmitted for conſideration.'

If any thing was wanting to confirm me in my opinion, that the d— of P——d had ſuffered himſelf to be completely duped, and deceived in this buſineſs, a compariſon of this letter, with what immediately followed, would be alone ſufficient to eſtabliſh that conviction. At the moment of his writing this letter, there was not 'a fact,' a circumſtance, 'or an opinion,' that could be tranſmitted to him, of which he was not in poſſeſſion. He acknowledges himſelf, and frequently refers to my letter of the 10th of February, in which he had the plan, wherein every thing that regarded the conſtitution, the eccleſiaſtical eſtabliſhment, and the ſettlement of property, was ſtated. He had the primate's opinion on ſome ideas that his grace had ſuggeſted. In a letter of mine, dated the 20th, he had ſtill more ample details on theſe various heads; but for theſe details, which were to have the moſt deciſive weight, he was not ſuffered to wait: the deciſion had been already formed before he hath called for them. The very day after he had written that letter, in which he had preſſed me for more information, he aſſiſted at the denouement of the piece. He aſſiſted at the cabinet meeting, that unanimouſly concurred in the neceſſity of recalling me: and in a letter of the 21ſt, ſums up all the reaſons why that meaſure was deemed neceſſary, without one diſſenting voice, for the very preſervation of the empire. Can any thing be more ſelf-evident; or, in order to account for the real cauſes of my recall, did it require that this letter ſhould be accompanied as it was by one from Mr. P— of the ſame date; accepting in fact the alternative I propoſed to him, declaring himſelf fully prepared for the event, however he might lament it? It is true, indeed, that for the very firſt time, he mentions the catholic buſineſs; and declares his concurrence in the general deſire of the cabinet, to prevent any further progreſs being made to Mr. G—n's bill, *till they ſhould receive and conſider the information which they thought it their duty to call for*; but by the deſertion of all my friends, and by the proſpect of my falling alone, Mr. P— was prepared to throw out this, as a matter on which to amuſe his colleagues for the moment, and the public at a future period; while to myſelf, without allowing a moment's further deliberation, he boldly and peremptorily pronounces on what I had determined to be the point to decide on my government. On the ſubject of arrangements, he felt bound to adhere to theſe ſentiments, not only with reſpect to Mr. B——d, but to the line of conduct adopted 'in ſo many inſtances toward the former ſupporters of government; by theſe ſentiments, he muſt, at all events, be guided from a regard to the king's ſervice, and to his own honour, however ſincerely he might lament the conſequences which muſt ariſe from the preſent ſituation.'

Need I add any comment on this letter? Need I obſerve to you, that the meaſure of the Roman catholics, on which it is now aſſerted my adminiſtration was determined, is here reſerved for future conſideration; while the ſubject of arrangements is finally

and peremptorily decided? At all events, and independent of every other conſideration, his own honour obliges him not to give way on that ſubject; and however he laments it, he acquieſces in what I had poſitively declared to him ſhould be the conſequence of ſuch a deciſion on his part.

Let my friends, therefore, my dear Carliſle, no longer ſuffer the catholic queſtion to be mentioned, as entering in the moſt diſtant degree into the cauſes of my recall. Let them liſten no longer to that terrifying enumeration of evils and miſeries to reſult to the empire from a meaſure which my enemies affect to have conſidered either as originating with myſelf excluſively, or as hurried on by me raſhly, precipitately, or without conſent or conſultation:—you have ſeen, when the dread of theſe miſeries was firſt conceived, and when the complaint of this want of conſultation was firſt brought forward, had Mr. B—— been never diſmiſſed, we never ſhould have heard of them, and I ſhould have remained.—But ſo remaining, I ſhould have been diſgraced indeed:—diſgraced by the failure of all the meaſures which I had planned for the public welfare, and loaded with all the odium which that man and his connections have entailed upon that government which I was ſent to diſplace. But it will be ſaid, that in proving this point ſo ſtrongly, I ſtill leave myſelf open to other accuſations, which affect my character, when I avow the earneſtneſs with which I had determined to pull down the power of the B——ds. I ſubmit to the imputation of wiſhing to raiſe the P——ys; it was only a family acquiring conſequence, and a family loſing it, according to an inſinuation of a letter to me from one of the cabinet. Am I then ſo little known to my friends? Is it my character in the world that, while I pretend the public good, and the king's ſervice, I am inſidiouſly conſulting my private intereſts? and, inſtead of my country, have only my own connections in view? I think, my dear Carliſle, you would be ſorry to ſee me condeſcend to enter into the merits of ſuch an accuſation.—But by my diſmiſſing Mr. B——, I broke my engagements with Mr. P—, ſo he himſelf ſtates it. I acted as he pretends in his letter, inconſiſtently with that principle by which alone the full advantage of the union which had taken place in England could be extended to Ireland. Would he inſinuate, that the union which had taken place in England, precluded every idea of removal? Was there no removal in the war-office?—None in the poſt-office? None in the cabinet? Has there been no removal of his friends at the admiralty? And did lord Spencer, on his ſucceeding lord Chatham, act inconſiſtently with the ſpirit of the union, when he required ſuch changes, and the conſtitution of ſuch a board, as, judging for himſelf, ſhould command his confidence? Could what was right and conſiſtent in ſo many inſtances, be blameable in mine? Charged with the government of a diſtracted and diſcontented country, am I alone to be fettered and reſtrained in the choice of the perſons by whom I am to be aſſiſted? And, rather than indulge me in that ſignal point, even conſidering it in the light of indulgence, muſt the miniſters of England boldly face, I had almoſt ſaid, the *certainty* of driving this kingdom into a rebellion, and open another breach for ruin and deſtruction to break in upon us? Muſt I be interrupted in the courſe of the moſt unanimous ſeſſion of parliament the country ever had ſeen? Commanding, by my influence, and on the credit of the perſons whom I had employed, and I muſt add, on the ſatisfaction I had given by one diſmiſſal I had made, ſupplies and forces beyond every former example; and cauſing a ſpirit of union and harmony to ſucceed to that general diſcontent and diſaffection, as well againſt the ſyſtem of the former government in general, as againſt the war itſelf; which, at the time of my arrival, manifeſtly and avowedly pervaded the bulk of the nation. And now, I think, I have ſufficiently proved that the catholic queſtion entered for nothing into the cauſe of my diſmiſſal; and have ſhewn that as far as my conduct in Ireland had any thing to do with it, I have traced it to the diſmiſſal of Mr. B——. But after all, why are we looking for the cauſes of my removal in the acts of my adminiſtration here?—We are ſeeking in vain: the true cauſe is not to be found among them: the fact is, we muſt go back to a more diſtant period. When the D—of P——d and his friends were to be enticed into a coalition with Mr. P—'s adminiſtration, it was neceſſary to hold out ſuch lures as would make the coalition palatable, or even poſſible for them to accede to. If the general management and ſuperintendance of Ireland had not been offered to his grace, that coalition could never have taken place. The ſentiments that he had entertained, and the language he had held ſo publicly for many years back, on the ſubject, rendered it a point that could not be diſpenſed with; accordingly it was offered from the

beginning of the negotiation; as was alſo the home department of ſ——y of ſ—e. Aſk the d— of P——d, when he engaged to accept, if he doubted that the office offered to him, was to be entire, and ſuch as his predeceſſors held it? Aſk him, if he was forewarned by Mr. P—, that it was to be diveſted of half its duties, half its importance, and all its character? Aſk him if he was appriſed, that another ſ——y of ſ—e was to be made out of the department? and that he was to be left but a joint poſſeſſor, with an inmate? Aſk him when he accepted the management of Ireland, if he did it under any reſtrictions whatever? Aſk him if he preſſed it upon me under any? and if he did not propoſe and recommend to me to lay myſelf out immediately, for making ſuch arrangements in the government, as would enable me to reſtore peace, tranquillity, and order in the country, and as would reconcile the general maſs of the people?

But my dear Carliſle, the inſtant we had proclaimed our acceptance, the ſcene began to open: then it was firſt diſcovered that the object of all this mighty work was, not to ſtrengthen adminiſtration by an acceſſion of character, but to debaſe, degrade, and diſgrace that character. When the junction was irrevocably avowed and declared, then the pretenſions of Mr. Dundas to the continued management of the war were immediately brought forward; and a new office was to be cabbaged out of the d— of P——d's, and an obvious diminution of his credit and authority was proclaimed. No ſooner had I declared my acceptance of the l——y of Ireland, than delay interpoſed, and ſoon doubts and difficulties aroſe. It is a matter of public notoriety in in this country, that Mr. P— aſſured lord W——d, as early as Auguſt, that he ſhould not be removed: and I know that I could bring evidence to prove that, in the courſe of the autumn, he pointed out my actual ſucceſſor as the perſon to ſucceed my predeceſſor. No, Mr. P— did not wiſh for our aſſiſtance; but knowing the importance we gave to the ſyſtem then purſuing relative to France, he ſnatched at the opportunity, and made that the means of diſgracing our characters, and rendering us fit for no other ſervice, but to be his vile tools and inſtruments. He thought that object perfected and complete; then he cared not how ſoon he turned us adrift, to all the diſgrace and contempt it was his expectation and wiſh ſhould attach upon our characters.—Here then is the clue to all the myſtery;—here you ſee unravelled the real ground of my depoſition and attempted diſgrace.—To my meaſures Mr. P— has no objection:—I predict that he will adopt them by the medium of my ſucceſſor.—I am not ſure that he will not court the connections I have formed for government;—for the perſon for whom he has pretended to contend ſo ſtrenuouſly, he has no regard; and I doubt whether he will ever permit him to reſume his ſtation at the r——e b—d, though he his entitled to do it without a re-appointment; for, in fact, he has never been out of office;—and to get rid of me perſonally, has been the motive to every thing that has happened relative to Ireland.

I have the glory of being objectionable to Mr. P—; I feel it ſuch: my character is not made to be vile and ſubſervient:—he has depoſed me—but by it, I have the arrogance to ſay, he has depoſed a faithful ſervant of the crown, and a beneficial g——r for the people of Ireland, and a ſtedfaſt adherent to the unity of both nations.

Believe me, &c.

March, 1795.

AFFAIRS OF FRANCE.

Continued from Page 224.

ON the 10th of Feb. Richard made the following obſervations on preſenting the treaty of peace with the grand duke of Tuſcany. 'Tuſcany, amid the political convulſions occaſioned by the French revolution, long preſerved the courſe preſcribed by the law of nations and its own true intereſts. This uſeful ſyſtem ſeemed eaſy to be purſued by this government. By its nature and its poſition, it is deſtined to take no part in the quarrel of its neighbours, and all Europe had been accuſtomed to reſpect its tranquillity. But hatred of the French revolution deranged all political calculations; and England, the pivot of the whole coalition, directing toward her ambitious views the general delirium, ſet no bounds to their arrogance and her pretenſions. Uſurping the empire of the ſea, ſhe wiſhed to dictate to all governments the ſentiments of her own, and forbade them to be indifferent to the

grand cauſe. Toward thoſe who could not be expected to obey her orders, ſhe employed perſuaſions and ſquadrons, and menace toward others whom ſhe knew to be weak. Her ambaſſadors ſailed with the cabinets of Sweden and Denmark; and her admirals ſucceeded before the ports of Naples and Legborn. On the 8th of October 1793, lord Hervey, in the name of the king of England, ſignified to the grand duke, at the cloſe of an inſulting declaration, that he gave him 12 hours for deciding againſt the French republic. The ſame day the grand duke complied with this imperative ſummons, which he had no means of refuſing. The agents of the French republic received orders to quit the territory, and all official communication was broken off.—The Tuſcan government ſoon felt that the ſituation in which it was placed was not its natural ſituation, and thenceforth aimed at re-eſtabliſhing its neutrality. Even in the year 1793, it began to manifeſt this diſpoſition to ſuch of our agents as remained in the country, and has ſince taken ſeveral ſteps to carry it into effect. Finally, it has ſent to Paris to treat directly with the committee of public ſafety, M. Carlotti, a man known all over Europe for the numerous ſervices he has rendered to the perſecuted French republicans in Italy. Several weighty conſiderations determined your committee of public ſafety, to liſten to the Tuſcan envoy, and to conclude with him a treaty which I am directed to preſent for your ratification. It appears to be conſiſtent with your principles and your intentions to treat with particular benevolence ſuch governments demanding peace, as could prove that they had never taken part in the war but by compulſion. Tuſcany was the firſt to acknowledge the French republic ſoon after the 10th of Auguſt. It maintained its neutrality as long as it had the power. The grand-duke himſelf, after the 8th of October 1793, never failed to treat the French eſtabliſhed within his territory with all the regard that could have been expected from a friendly government. They were never perſecuted, either for their opinions or on account of the events that diſtinguiſhed the different periods of the revolution. They received their revenues as before, and the tribunals of the country were open to them. A conſiderable quantity of corn had been taken from us by the Engliſh at Leghorn. The grand duke has made reſtitution at his own charge, and the corn is now in our ports. In acceding to the demand of the government of Tuſcany, you will confirm, by a practical inſtance, the grand principles you have proclaimed as the baſis of your diplomatic tranſactions, and compel your detractors to do homage to your candour and your juſtice. On the other hand, a ſtate of war with Tuſcany, can, in no point of view, promote our intereſts, and its neutrality preſents real advantages, principally with reſpect to commerce. What theſe are, you who know better than any body how important it is to the national proſperity to extend commercial relations, will eaſily perceive. Amid the multiplied triumphs that have ſignalized this campaign, it is honourable for you to conclude ſuch treaties. You have aſtoniſhed Europe by your military ſucceſſes; you will aſtoniſh it no leſs by your manner of uſing victory. You will be eaſy without weakneſs, toward governments whom the force of an almoſt general impulſion, which they were in no condition to reſiſt, has drawn into the league formed againſt you; but you will be firm, without being inacceſſible, toward the great powers, who have inſtigated all Europe to the deſtruction of France, and who, to gratify their vanity and ambition, have cauſed ſuch floods of blood to be ſhed for three years. Above all, you will humble England, whoſe rage for blood is particularly diſtinguiſhed; and you will never forget, that you ought to avenge upon her the outrages ſhe has ſo often committed upon juſtice and humanity.'

Several other members roſe ſucceſſively, in order to deliver their ſentiments on the mode to be adopted by the convention, reſpecting the entering into negociations of peace with the belligerent powers, the reſult of which was, that Richard's report was ordered to be printed, and the conſideration thereof adjourned to the 13th.

On the 21ſt of February, Boiſſy d'Anglas, in the name of the committee of public and general ſafety and of legiſlation, made a philoſophical report on the wiſdom, as well as neceſſity, of giving full courſe to religious liberty; and the convention adopted the opinions of the committee by the following decree:

Every form of worſhip may be exerciſed without moleſtation. The ſtate allows no ſalaries for the exerciſe of any worſhip, or dwelling for its miniſter. No external ſigns of worſhip, ſhall be affixed in public places, or in roads, or offered in any manner to the view of the citizens. No inſcription ſhall point out the place which is employed for the exerciſe of public worſhip.

On the 31 of March, Cambaceres, in the name of the committee of public safety, made a long and interesting report, the main object of which was to define the powers to be given to that committee, in treating and negociating peace with the nations with whom the French are at war; the principles of which are to be seen in the articles with which the report concluded, which are as follow:

The national convention decree,

'Art. 1. That the committee of public safety, charged by the law of the 7th Fructidor, with the direction of foreign relations, shall negociate, in the name of the republic, treaties of peace, alliance, neutrality, and commerce, and resolve upon the conditions of such.

'2. It shall take all necessary measures for accelerating and facilitating the conclusion of such treaties.

'3. Treaties shall be signed either by the members of the committee, where they have treated immediately with the envoys of foreign powers, or by plenipotentiaries, to whom the committee shall delegate authority for this purpose.

'4. The treaties are not valid till after they have been examined, ratified, and confirmed by the national convention, on the report of the committee of public safety.

'5 Preliminary and particular conventions, such as armistices, are not subject to this ratification.

'6. In cases where treaties, being submitted to the sanction of the convention include secret articles, and when engagements are to be contracted with foreign powers, which require the approbation of the national convention, yet cannot be made public, the convention nominates a commission, composed of twelve members.

'7. This commission shall examine the political operation in question; it shall declare to the national convention, whether it considers the projected operation as conformable to the principles and interests of the republic, and whether it ought to be kept secret.

'8. Upon this declaration the national convention shall authorise the committee of public safety to pursue this operation.

'9. By virtue of this authority the conditions decreed by the committee of public safety shall be executed.

'10. Upon the report of the commission, the national convention shall fix the time when the committee of public safety shall give an account of the object of negociation, and the measures taken.'

The convention ordered the report to be printed, and the discussion of it to be adjourned. From this period to some time in the month of April, Paris was the scene of very violent contests between the adherents of the convention and the remnants of the jacobins. At one time, general Pichegru (who was then at Paris) was under the necessity of heading the national guards, in order to disperse an armed body of insurgents; and at length, the firmness of the convention against the terrorists and royalists effectually triumphed.

After long and tedious agitations of the question, the affair of Barrere, Bilhaud de Varennes, and Collet d'Herbois (charged with being accomplices in the crimes of Robespierre) were finally adjudged to be banished to the French colony of Guiana in South America.

On the 10th of April, Reubel, in the name of the committee of public welfare, announced the important news of

PEACE WITH PRUSSIA.

'You have now before you,' said he, the fruits of your principles and wisdom. The governments which had sworn the ruin of the republic, are now eager to demand peace, since they have seen the wisdom and the principles which direct the convention.

'The committee of public welfare has followed your intentions of procuring a partial peace, and offers for your ratification that which is concluded with the king of Prussia. We have not forgot for an instant, that if the wishes of the people were for a glorious peace, it behoved us likewise to bind in their interest a power not likely to disengage itself from us.

'You will judge if your committee has obtained its object. The principal point was to re-establish the exterior relations, and to heighten these. We believe it will be useful to have for our ally a power enjoying a preponderance in the empire, which may turn to the advantage of the republic.

'All accounts inform us, that the Prussian nation has not ceased, during the whole war, to give to the French nation proofs of esteem. The indefatigable zeal of the envoy of the French republic in Switzerland has surmounted all obstacles; he has acted with that candour which carries conviction to every mind.

'This peace is not the only one which at present occupies the attention of your committee. Continue, representatives, to display principles of wisdom, and soon shall all the projects of the malevolent be overset. French people, remain insensible to their perfidious insinuations. A mo-

ment of precipitation will ruin you; ſoon ſhall your welfare be ſecured.'

Reubel next read the powers given by the king of Pruſſia to baron Hardenberg, for the concluſion of a peace. He next preſented the treaty, conſiſting of twelve articles, concluded on the 16th Germinal (April 5) at Baſle, between citizen Barthelemy and baron Hardenberg.

THE TREATY.

Article 1. There ſhall be peace, friendſhip, and good underſtanding between the French republic and the king of Pruſſia, who ſhall be recognized in that character, as well as elector of Brandenburg, and a member of the Germanic body.

Art. 2. In conſequence, all hoſtilities between the two powers ſhall ceaſe, reckoning from the day of the ratification of the preſent treaty; and from the ſame period neither ſhall furniſh to their enemies, under any pretext whatever, ſuccours in men, horſes, or money.

Art. 3. Neither of the contracting powers ſhall give through their territory, a paſſage to the troops of the enemy of the other.

Art. 4. The troops of the republic ſhall evacuate, within fifteen days after the ratification, ſuch parts of the Pruſſian territory as they now occupy on the right bank of the Rhine; all requiſitions which have been made are declared void; the amount of all contributions received ſhall be reimburſed.

Art. 5. The troops of the republic ſhall continue to occupy the part of the ſtate of the king of Pruſſia, ſituated on the left bank of the Rhine; the arrangement with regard to theſe provinces ſhall be reſerved to the time of a general pacification with the Germanic empire.

Art. 6. Until a treaty of commerce ſhall be concluded between the court of Berlin and the French republic, all the communications and commercial relations ſhall be re-eſtabliſhed upon the footing on which they were before the war.

Art. 7. The proviſions of article ſix, not having their full effect while the war ſhall continue in the north of Germany, the two contracting powers ſhall take meaſures to carry the war from that quarter.

Art. 8. To individuals of both nations ſhall be reſtored the effects, of whatever nature they may be, which have been ſequeſtrated.

Art. 9. All perſons taken ſince the commencement of the war ſhall be reciprocally reſtored within the ſpace of one month.

Art. 10. The priſoners of Mayence, Heſſians, Saxons, and others, who ſerved with the army of the king of Pruſſia, ſhall likewiſe be exchanged.

Art. 11. The French republic will be glad of the good offices of the king of Pruſſia with the members of the Germanic body, ſituate on the right bank of the Rhine, who are willing to enter into good underſtanding with it.

Art. 12. The preſent treaty ſhall not be in force until ratified by the contracting powers, which ſhall be done within a month at leaſt, or ſooner if poſſible.

The aſſembly applauded the report and the treaty of peace, and conformable to the decree reſpecting exterior relations, ordered them to be printed, and adjourned to Quintidi.

And, on the 24th of April, this treaty was unanimouſly ratified by the national convention.

[To be continued.]

An Account of the Journey, Voyage, and Arrival of the Princeſs CAROLINE *of* BRUNSWICK, *and of the Marriage Ceremony between her Serene Highneſs and the Prince of* WALES.

ON Tueſday the 24th of March, at ſeven o'clock in the morning, her ſerene highneſs the princeſs Caroline of Brunſwick (accompanied by her royal and ſerene highneſs, Auguſta ducheſs of Brunſwick, her mother, and by the hon. Mrs. Harcourt) left Hanover, where ſhe had reſided, ſome time, after her departure from Brunſwick, and proceeded on her route to England. She was eſcorted out of Hanover by a troop of Hanoverian guards, under a ſalute of the cannon of the garriſon. The ducheſs proceeded no farther than Mullendorf, where ſhe was joined by the duke of Brunſwick, who had came thither on purpoſe to take a final leave of his daughter. The parting ſcene was a very affecting one, the princeſs having long endeared herſelf to her auguſt parents by the moſt amiable temper and conduct. The duke and ducheſs returned to Brunſwick; and the princeſs proceeded to a place called Weltsrode, where ſhe ſlept that evening.

The proceſſion conſiſted of ſix coaches and ſix, with four outriders, two courier carriages with four horſes, two baggage waggons containing proviſions for the journey, with ſix horſes. In the firſt carriage were two chamberlains belonging to the court of Brunſwick; in the ſecond, were the princeſs and Mrs. Harcourt; in the third were lord Malmeſbury and major Heſlop; and, in the other carriages, were different attendants.

On Wedneſday night, her ſerene highneſs ſlept at Cloſterſeven, about twenty-ſix miles from Stade; and, on Thurſday afternoon, at three o'clock, arrived at Stade to dinner. During the route, her ſerene highneſs and ſuite were entertained at each place where they ſtopped at the houſe of ſome nobleman or gentleman, as had been previouſly ſettled. Count Wangenheim, ſteward of the houſhold at the palace of Hanover, went on before to provide the neceſſary accommodations.

On entering Stade, her ſerene highneſs was received in the moſt reſpectful manner. The garriſon turned out, and welcomed her with the royal ſalute from the batteries. On being conducted to the houſe of the commandant, ſhe was waited on by the mayor and burghers, who congratulated her on her arrival. Thouſands of perſons had come to Stade from Hamburgh and other parts of the country, to ſee her. Her ſerene highneſs dined, both on that and the following day, in public, where every perſon had an opportunity of ſeeing her. She ſtaid the whole day of Friday at Stade, and walked on the ramparts and about the town, in order to gratify the public curioſity.

On Saturday morning, at nine o'clock, her ſerene highneſs embarked on board the Princeſs Royal, one of his majeſty's cutters, under a ſalute of the guns from the batteries, and was received by commodore Payne. In the ſame cutter went Mrs. Harcourt and lord Malmeſbury; the reſt of the retinue who came to England with the princeſs having embarked on board another cutter. At three in the afternoon, they reached Cruxhaven, where her ſerene highneſs was received on board the Jupiter of fifty guns, captain Lechmere. Commodore Payne, Mrs. Harcourt, and lord Malmeſbury, embarked in the ſame ſhip, major Heſlop, colonel Richardſon, and Mr. Roſs, in the Phaeton frigate, captain Stopford.

On Sunday morning, at eight o'clock, the ſhips weighed anchor from Cruxhaven, with a fair wind at ENE, which continued till Wedneſday, when a thick fog came on. They were then only ſix leagues from Yarmouth, but as it was dangerous to draw nearer the coaſt, the ſhips dropped anchor, and fired fog guns every hour. In this ſituation they lay through the whole of Thurſday. The princeſs had hitherto been extremely well, had walked the quarter deck every day, and was uncommonly cheerful; but, what with the fog, and the motion of the veſſel at anchor, ſhe became a little incommoded. The morning, on Friday, was uncommonly fine; and, at four o'clock, the Jupiter made the ſignal to get under weigh. The fleet went under an eaſy ſail, came off Harwich about noon, and paſſed through the Swin, to enter the Thames. About two, a very thick fog came on, which obliged the commodore to drop anchor. At four, the fog diſperſed, and the ſignal being made to unmoor, the fleet again got under weigh, and about ſix o'clock dropped anchor at the Nore; being ſaluted from the Sandwich guard-ſhip ſtationed off there.

At nine o'clock on Saturday morning, the 4th of April, the ſhips got under weigh, the tide ſerving, and about noon the Jupiter anchored off Graveſend. The princeſs ſlept on board that night.

On Sunday morning, as ſoon as the tide ſerved, her ſerene highneſs, accompanied by Mrs. Harcourt, lord Malmeſbury, and commodore Payne, diſembarked from the Jupiter, and went on board one of the royal yachts; and after twelve o'clock, landed at Greenwich hoſpital. The princeſs was received, on her landing, by ſir Hugh Palliſer, the governor, and other officers, who conducted her to the governor's houſe, where ſhe took tea and coffee. Lady Jerſey did not arrive at the governor's till an hour after the princeſs had landed: and ſoon after, they both retired into an adjoining room, and the dreſs of the princeſs was changed, from a muſlin gown and blue ſattin petticoat, with a black beaver hat, and blue and black feathers, for a white ſatin gown, and very elegant turban cap of ſatin, trimmed with crape, and ornamented with white feathers, which were brought from town by lady Jerſey.

A little after two o'clock, her ſerene highneſs left the governor's houſe, and got into one of the king's coaches, drawn by ſix horſes. In this coach were alſo Mrs. Harcourt and lady Jerſey. Another of his majeſty's coaches and ſix preceded it, in which were ſeated Mrs. Harvey Aſton, lord Malmeſbury, lord Clermont, and

colonel Greville. In a third coach with four horſes, were two women ſervants, whom the princeſs brought from Germany, and are her only German attendants from thence. The princeſs' carriage was eſcorted on each ſide by a party of the prince of Wales' own regiment of light dragoons, commanded by lord Edward Somerſet. Beſide this eſcort, the road was lined at ſmall diſtances by troops of the heavy dragoons, who were ſtationed from Greenwich all the way to the horſe guards. In her way through the crowds of people that lined the whole way, her ſerene highneſs bowed and ſmiled in a moſt affable manner.

Before three o'clock, her ſerene highneſs alighted at St. James', and was introduced into the apartments prepared for her reception, which look into Cleveland-row.

After a ſhort time, the princeſs appeared at the windows, which were thrown up, that the people might have a ſight of her. They huzzaed her, and ſhe curtſeyed; and this continued ſome minutes, until the prince arrived from Carlton-houſe. His royal highneſs, on entering the palace, appeared extremely agitated. He was introduced to the princeſs by lord Malmeſbury, and immediately ſaluted her. Mrs. Harcourt had, in the mean time, gone to the queen's houſe, to announce the princeſs' arrival.

The head-dreſs of the princeſs, was the ſame as that in which ſhe is painted in the picture ſent by the duke of Brunſwick to the prince; and his royal highneſs was dreſſed in a full ſuite of the huſſar uniform of his regiment, the ſame as the dreſs of his picture, painted by Coſway, and ſent to the princeſs.

A little before five, the prince and princeſs ſat down to dinner. At the ſame table were lady Jerſey, Mrs. Harvey Aſton, Mrs. Harcourt, lord Malmeſbury, lord Clermont, colonel Greville, and major Heſlop.

The people continuing to huzza before the palace, his royal highneſs, after dinner, appeared at the window, and thanked them for this mark of their attention; but he hoped that they would excuſe her appearance then, as it might give her cold. This completely ſatisfied the crowd, who gave the prince three cheers, and diſperſed.

About eight, the king, queen, and all the princeſſes, the duke and ducheſs of York, the duke of Clarence, the duke of Glouceſter, prince William, and the princeſs Sophia, were introduced to her ſerene highneſs; and it was eleven o'clock before they retired. The princeſs was then left under the care of Mrs. Harvey Aſton, who ſlept in the royal apartments.

The princeſs is rather below the middling ſtature; a pleaſing figure; has a look of great goodnature and affability, expreſſive eyes, flaxen hair, teeth as white as ivory, a good complexion, a beautiful hand and arm, and may certainly be deemed a very pretty woman. She has ſomething of his majeſty's reſemblance, particularly in her upper lip, which rather projects. Her manners are uncommonly engaging. A ſtriking likeneſs of her ſerene highneſs appeared in our Magazine for January laſt, from an original print engraved by Schroeder of Brunſwick.

St. James', Wedneſday, April 8, 1795.

This evening the ſolemnity of the marriage of his royal highneſs the prince of Wales with her highneſs the princeſs Caroline of Brunſwick was performed in the chapel royal by the archbiſhop of Canterbury. The proceſſions, to and from the chapel, were in the following order.

The Proceſſion of the BRIDE.

Drums and Trumpets.
Kettle Drums.
Serjeant Trumpeter.
Maſter of the Ceremonies.
The Bride's Gentleman Uſher between the Two Senior Heralds.
His Majeſty's Vice Chamberlain.—His Majeſty's Lord Chamberlain.

The BRIDE,

In her nuptial habit, with a comnet, led by his Royal Highneſs the Duke of Clarence, her train borne by four unmarried daughters of dukes and earls, viz.

Lady Mary Oſborne, Lady Caroline Villiers, Lady Charl. Spencer, Lady Charlotte Legge.

And her highneſs was attended by the ladies of her houſehold.

On entering the chapel, her highneſs was conducted to the ſeat prepared for her, near her majeſty's chair of ſtate. The maſter of the ceremonies, with the gentleman uſher, retired to the places aſſigned them.

The lord chamberlain and vice chamberlain, with a herald, returned to attend the bridegroom; the ſenior herald remaining in the chapel, to conduct the ſeveral perſons to their reſpective places.

The BRIDEGROOM'S Proceſſion,

In the ſame order as that of the bride, with the addition of the officers of his royal highneſs' houſehold.

His Royal Highneſs the PRINCE of WALES,
In his collar of the order of the Garter, ſupported by two unmarried dukes, viz.
Duke of Bedford. Duke of Roxburgh;
And his royal highneſs being conducted to his ſeat in the chapel, the lord chamberlain, vice chamberlain, and two heralds, returned to attend his majeſty.

THEIR MAJESTIES PROCESSION.

Drums and Trumpets as before.
Knight Marſhal.
Purſuivants.
Heralds.
Treaſurer of the Houſehould.
Maſter of the Horſe.
Two married Dukes, viz.
Duke of Leeds. Duke of Beaufort.
Lord Steward of the Houſehold.
Provincial Kings of Arms.
Serjeants at Arms. Lord Privy Seal. Serjeants at Arms.
Lord Preſi. of the Council.
Archbiſhop of York.
Lord High Chancellor.
Archbiſhop of Canterbury.
Garter Principal King of Arms, with his Sceptre, between two Gentlemen Ushers.
The Earl Marſhal, with his Staff.

PRINCES of the BLOOD ROYAL, viz.
Prince William.
His Royal Highneſs the Duke of Glouceſter.
His Royal Highneſs the Duke of York.
Sword of State, borne by the Duke of Portland, between the Lord Chamberlain and Vice Chamberlain of the Houſehold.

HIS MAJESTY,
In the Collar of the Order of the Garter.
Captain of the Yeomen of the Guard. Colonel of the Life Guards. Captain of the Band of Gentlemen in Waiting.
The Lord of the Bedchamber in Waiting.
Maſter of the Robes.
Groom of the Bedchamber.

Vice Chamberlain to the Queen.

HER MAJESTY,
between the Queen's Lord Chamberlain, and the Queen's Maſter of the Horſe.
Their Royal Highneſſes, The Princeſs Royal,
Princeſs Auguſta Sophia,
Princeſs Eliſabeth,
Princeſs Mary,
Princeſs Sophia,
Princeſs Amelia,
Her Royal Highneſs the Ducheſs of York,
Princeſs Sophia of Glouceſter,
ſupported ſeverally by their Gentlemen Ushers.
The Ladies of her Majeſty's Bedchamber.
Maids of Honour.
Women of her Majeſty's Bedchamber.

Upon entering the chapel, the ſeveral perſons in the proceſſion were conducted to the places appointed for them. Their majeſties went to their chairs on the haut-pas, the bridegroom and the bride to their ſeats, and the reſt of the royal family to thoſe prepared for them.

At the concluſion of the marriage ſervice their majeſties retired to their chairs of ſtate under the canopy, while the anthem was performing. The proceſſion afterward returned in the following order:

Drums and Trumpets, as before.
Maſter of the Ceremonies.
The Princeſs' Gentleman Uſher, between Two Heralds.
Officers of the Prince's Houſehold.
His Royal Highneſs the Prince of Wales leading the Bride,
and ſupported by two married dukes, viz.
Duke of Beaufort. Duke of Leeds.
The Ladies of her Royal Highneſs' Houſehold.

The king was attended by the great officers, in the ſame manner in which his majeſty went to the chapel; and her majeſty and the princeſſes in the order before mentioned.

The proceſſion, at the return, filed off in the privy chamber. Their majeſties, the bridegroom and bride, with the reſt of the royal family, and the great officers, proceeded into the levee chamber, where the regiſtry of the marriage was atteſted with the uſual formalities; after which the proceſſion continued into the leſſer drawing-room; and their majeſties, with the bridegroom and bride, and the reſt of the royal family, paſſed into the great council chamber; where the great officers, nobility, foreign miniſters, and other perſons of diſtinction, paid their compliments on the occaſion.

The evening concluded with very ſplendid illuminations, and other public demonſtrations of joy, throughout London and Weſtminſter.

The following addreſſes were preſented to their majeſties, on Friday the 17th, by the lord mayor, aldermen and commons of the city of London.

To the King's moſt excellent Majeſty.

The humble Addreſs of the Lord-mayor, Aldermen, and Commons of the City of London, in Common Council aſſembled.

Moſt Gracious Sovereign,

We, your majeſty's moſt dutiful and loyal ſubjects, the lord-mayor, aldermen, and commons of the city of London, in common council aſſembled, requeſt permiſſion to approach the throne with our warmeſt congratulations on the auſpicious nuptials of his royal highneſs the prince of

Wales, with her ſerene highneſs the princeſs of Brunſwick.

We cannot but feel the moſt lively ſentiments of affection for a princeſs, bleſſed with every endowment to adorn her exalted ſtation; and form the happieſt preſage, that the endearing qualities of her mind will be matured by the benign influence of our moſt gracious queen, whoſe eminent example will be acknowledged and admired, as long as virtue can charm, or tranſcendent worth command imitation and reſpect.

Your majeſty's faithful citizens of London confeſs, with the moſt grateful emotions, the uniform and ſteady regard which your majeſty has evinced for the future intereſt of your people, by this happy alliance of the illuſtrious houſe of Brunſwick, devoted to the proteſtant cauſe, and anxious for the maintenance of thoſe its ſacred pillars—ſocial order and rational freedom.

At the ſame time that we look forward with ſolicitude and delight to the deareſt intereſts of our poſterity, we cannot be unmindful of our own immediate joy upon this feſtive occaſion, becauſe we have happily reſtored to us the fair repreſentative of a princeſs nearly related to your majeſty, and thereby inheriting a claim to that national regard and eſteem, which manifeſted itſelf in regret at the departure of her amiable mother from theſe kingdoms.

Permit us, ſire, earneſtly to hope that your majeſty, under whoſe mild and gracious government we have enjoyed the privileges of our fathers inviolate and ſecure, may have the felicity to ſee their royal highneſſes experience every bleſſing conſequent upon this moſt propitious event, and that your majeſty will believe the warm aſſurances of the citizens of London, uniformly and zealouſly to ſupport your majeſty's perſon, crown, and family, againſt all your enemies.

To the Queen's moſt excellent Majeſty.

The humble Addreſs of the Lord-mayor, Aldermen, and Commons of the City of London, in Common Council aſſembled.

May it pleaſe your Majeſty,

We, his majeſty's moſt dutiful and loyal ſubjects, the lord-mayor, aldermen, and commons of the city of London, in common council aſſembled, beg leave to congratulate your majeſty on the recent nuptials of his royal highneſs the prince of Wales, with her ſerene highneſs the princeſs of Brunſwick.

We felicitate ourſelves ſincerely on an alliance which muſt form ſo intimate a part of your majeſty's happineſs, more eſpecially becauſe your majeſty's virtues will, we truſt, be perpetuated to ages yet unborn, in the perſon of an illuſtrious princeſs, whoſe native goodneſs cannot but admire them, and whoſe exalted ſtation can find no model ſo perfect for emulation.

The loyal citizens of London, madam, therefore feel it their intereſt, as it is their gratification, to indulge themſelves in the ſanguine hope that her royal highneſs' moſt amiable endowments may long contribute to your majeſty's domeſtic felicity, and that the endearing qualities of her mind may long have the reciprocal pleaſure of contemplating your majeſty's example.

So ſhall this happy nation, long accuſtomed to behold its higheſt graces moſt conſpicuous on the throne, enjoy the hope of this ſolid advantage in reverſion for poſterity, that an equal pattern of royal goodneſs is reſerved for them to admire, and that they will regard with gratitude this very happy event.

On Thurſday, April 23, the lord-mayor, &c. waited on their royal highneſſes the prince and princeſs of Wales, at Carlton-houſe, with the following addreſſes.

To his royal highneſs the Prince of Wales.

May it pleaſe your royal highneſs,

The lord-mayor, aldermen and commons of the city of London, in common-council aſſembled, beg leave to congratulate your royal highneſs on your recent marriage with her ſerene highneſs the princeſs Caroline of Brunſwick.

It is with extreme pleaſure and gratification that we behold your royal highneſs ſo impreſſed with affection toward his majeſty's moſt dutiful and loyal ſubjects, as to form the preſent happy alliance with a princeſs, illuſtrious in rank, and poſſeſſing every engaging quality of the heart ſuited to the important ſtation which ſhe fills, and calculated to remunerate with conjugal felicity the high honour of your royal highneſs' affection and choice.

The proſpect by this illuſtrious event of perpetuating the virtues of your royal houſe to poſterity, who ſhall know, equally with ourſelves, how to value the mild monarchy ſo admirably interwoven with our moſt ex-

ſellent conſtitution, forms a material part of our happineſs.

Depending, as good ſubjects ever muſt, on the virtues of the royal breaſt, as eſſential to the ſplendour of a throne and the proſperity of a people, it is matter of great conſolation to us to reflect upon the invaluable example of your royal father, which, confirming the many graceful and amiable qualifications of your own mind, cannot but complete the royal character, and, in the fulneſs of time, muſt make your future people happy.

Many your illuſtrious conſort long enjoy her exalted ſituation, and may a numerous progeny, from this auſpicious union, tranſmit the bleſſings under which we live to the end of time.

To which addreſs his royal highneſs was pleaſed to return the following anſwer.

My lord-mayor and gentlemen,

I am truly ſenſible of this mark of attention in the lord-mayor, aldermen and commons of the city of London, in common council aſſembled: I return them my ſincere thanks for their congratulations on the occaſion of my marriage; and it gives me peculiar ſatisfaction that they take ſo warm an intereſt in this event. I am much gratified by the expreſſions of their affectionate attachment, which convey ſo ſtrong a proof of their loyalty to the king, and of their zealous regard for my happineſs.

To her royal highneſs the Princeſs of Wales.

May it pleaſe your royal highneſs,

We, his majeſty's dutiful and loyal ſubjects, the lord-mayor, aldermen and commons of the city of London, in common council aſſembled, take the earlieſt opportunity to congratulate your royal highneſs on the happy occaſion of your marriage with his royal highneſs the prince of Wales.

Added to the intrinſic virtues of your royal highneſs, the high ſtation you are ſo well qualified to adorn, and your alliance with ſo diſtinguiſhed a prince, the heir apparent of theſe happy realms, your royal highneſs has alſo powerful claims to the affection of a grateful people, nearly related as you are to our moſt gracious ſovereign, the father of his ſubjects.

Permit, then, madam, the faithful ſubjects of the beſt of kings to aſſure your royal highneſs of their moſt ſincere veneration and eſteem, and to believe that as your intereſt is now united with that of our amiable prince, your happineſs will be by them conſidered and conſulted as ours.

Long may your royal highneſs ſhare the joy of ſo ſplendid an union, and may our lateſt poſterity receive from you a continuation of thoſe bleſſings which only can be experienced under the government of a beloved and virtuous king.

To which addreſs her royal highneſs was pleaſed to return the following anſwer.

My lord mayor and gentlemen,

I return you many thanks for your congratulations upon an event ſo intereſting to my happineſs, and ſo grateful to my feelings. My ſentiments will ever be the ſame with thoſe of the prince, and they have been already better expreſſed to you by him.

They were all received very graciouſly, and had the honour to kiſs their royal highneſſes' hands.

PROCEEDINGS *of the Fifth* SESSION *of the Seventeenth Parliament of* Great Britain; *continued from Page* 218.

ON Tueſday, March 24, in the houſe of commons, Mr. Fox roſe to move, that the houſe reſolve itſelf into a committee, to enquire into the ſtate of the nation. In a long ſpeech, he reviewed all the arguments reſpecting the unfortunate war in which we are engaged, which had ſo recently and repeatedly been the ſubject of diſcuſſion. He contraſted the perils to which we were expoſed with thoſe we had experienced in the moſt calamitous period of the American war; and he ſhowed, that they were trifling, when compared with the dangers of our preſent ſituation. He mentioned the new taxes, which the next campaign would neceſſarily impoſe on the country, and that to continue what was a hopeleſs conteſt on our parts, while the enemy remained confeſſedly ſtronger in reputation and reſources, than when their monarchs entertained the wildeſt ideas of aggrandizement and univerſal dominion. He adverted to the great loſs of men we had ſuſtained during the laſt campaign; a loſs, which the country, on account of its decreaſed population, could not eaſily repair. Speaking of our pecuniary reſources, he ſaid, that by this war, we had

incurred a funded debt of 50,000,000, and increaſed the unfunded debt to between 6 or 7,000,000, beſide a proportionate augmentation of the permanent taxes. With reſpect to our reſources from commerce, he ſtated, that, in the laſt two years, the revenue in that depattment had decreaſed 2,000,000l. The trade of Lancaſter and Mancheſter had diminiſhed one half and three fourths; the price of inſurance had been raiſed beyond all example; and yet we were continually boaſting of our inexhauſtible reſources. Taking a retroſpect of the conduct of the king of Pruſſia, he ſhowed the little dependence we could have upon our next principal ally, the emperor, or upon our ſecondary allies, Spain, Portugal, Naples, and Sardinia.—The conduct of our own cabinet was next the ſubject of Mr. Fox's animadverſion. To him juſtice appeared ever to be the beſt policy. All policy not founded in juſtice was unwiſe; but it was our deficiency in both that had enfeebled our efforts: to this he might add, he ſaid, want of humanity, honour, and magnanimity, which he alleged from our plan of ſtarving France, and our hectoring behaviour toward ſeveral of the Italian ſtates, and to Switzerland, in which inſolence and meanneſs were coupled, in a manner new to the character of England. The tenour of our conduct too was of the moſt diſcouraging tendency to all thoſe from whom we could have wiſhed to derive aſſiſtance: he alluded to our treatment of the French emigrants in England, of the royaliſts in the weſt of France, of La Fayette and Dumourier; and to the behaviour of lord Hood at Toulon. The Dutch alſo we had alienated from us by forcing them into a war againſt their inclination.—As a further ground for enquiry, he mentioned the number of captures that had been made during the preſent war, unexampled in any former one: in one year of the American war, 499 ſhips had been taken from us by the powers then in combination againſt us; while, in 1794, no leſs than 860 were taken from us by the French alone. He mentioned, likewiſe, that although, after the glorious victory of the 1ſt of June, it might have been ſuppoſed that the French could no longer be maſters of the ſea, yet they were, after that period, our two months before lord Howe's fleet could ſail, and ſuffered to traverſe the whole channel unmoleſted.

The laſt ground for an enquiry, ſtated by Mr. Fox, was the ſituation of Ireland, which he repreſented to be truly dangerous and alarming, from the irritation and reſentment excited in that kingdom by the diſappointment of the very hopes which miniſters themſelves had raiſed.

'The moſt popular meaſures,' ſaid Mr. Fox, 'were to have been carried into effect; the entire emancipation of the catholics was to have taken place; odious and inveterate abuſes were to have been removed: but, no ſooner are the ſupplies granted, and every intereſted view accompliſhed, but the ſcene changes, and the feelings and intereſt of the Iriſh nation are ſacrificed to the rapacity and ambition of a few paltry placemen, who were deteſted by the country as inſeparably connected with the abuſes it deplored.'

The catholics of Ireland, upon the neareſt calculation, made about three fourths of the inhabitants of the whole country. But the catholics were no longer a divided people from the reſt of the nation: no longer did the parties of proteſtants and papiſts exiſt. The only parties now in the country were placemen and penſioners againſt the whole people; and there was no longer any reaſon to dread a diviſion. But there was a circumſtance much more to be dreaded, which was, the wiſh that ſome might entertain of ſeparating Ireland from this country; and there were no means of which ſuch perſons could better avail themſelves than the events which lately took place, by which England would be repreſented as a nation hoſtile to the intereſts of Ireland. Gentlemen might conſider whether theſe were not the greateſt dangers that could be dreaded at this moment of war and difficulty, and whether they did not demand a ſerious enquiry; when, if it ſhould appear that lord Fitzwilliam had been wildly running after popularity, and conſequently had adopted meaſures that would produce real evils, he ſhould meet the cenſure which ſuch conduct deſerved; but if, on the other hand, it ſhould turn out that he had been deceived and ſhuffled with by his majeſty's miniſters, who had authoriſed him to do thoſe things which they afterward retracted, it was impoſſible to ſay what puniſhment would be too great for ſuch miſchievous duplicity; and, upon theſe grounds, he could not conceive why an enquiry ſhould be refuſed. In a word, in every point of view, the conduct of miniſters, Mr. Fox contended, had been highly injurious to the country. Day after day did they perſiſt in a war of blood and misfortune; and, although they con-

ſtinued to purſue the ſame means in carrying it on, they were conſtantly varying its object. They appeared to be fighting for the ſake of the people of France, at the ſame time that their conduct had animated all France againſt them, without gaining any one party to their cauſe; for this reaſon, that they never would ſtate fairly the ſpecific object which they had in view.

The chancellor of the exchequer ſaid, that before he would attempt to follow the right hon. gentleman through the complicated detail of which his ſpeech was compoſed, he muſt expreſs his diſapprobation of a certain point on which the principal ſtreſs was laid, namely, his alluſion to the affairs of Ireland. It muſt be obvious, that it was a delicate ſubject; and he doubted whether it could at all be regularly made the ſubject of diſcuſſion in the Britiſh parliament; at leaſt, from the very nature of the caſe, it was impoſſible that the ſubject could be diſcuſſed therein with that full information that its magnitude and importance required.

The impropriety of agitating this ſubject at the preſent period, was obvious in another point of view; namely, that the part of it which related to the catholics, was a queſtion ſtill pending in the ſiſter kingdom. Any diſcuſſion of it here then would not only be obſerved, but would tend to produce thoſe very evils which the right hon. gentleman profeſſes it to be his wiſh to remove. The queſtion was of the moſt ſerious importance, involving a variety of conſiderations; the effect of ſudden innovation was to be conſidered, and how far the claims of the catholics may be deemed reaſonable ſo ſoon after the indulgencies granted them in 1793, which certainly were ſufficient for every purpoſe of individual comfort.

With reſpect to the other principal points alleged by the right hon. gentleman as grounds of enquiry, they had already been decided upon in that houſe, and, therefore, there was no neceſſity for any new enquiry. However, in anſwer to the right hon. gentleman's obſervations on our pecuniary reſources, he obſerved, that the flouriſhing ſtate of our credit was practically evinced by the facility with which the loan was negotiated, which ſhowed, that the energies and reſources of this country roſe and increaſed in proportion to the neceſſity of their exertion. With reſpect to our population, he had an inconteſtable proof, that it was ſufficient to ſupply any increaſed demand for men; and that was the circumſtance of our having a greater army, and a better-manned navy now than in any former war; and as to the right hon. gentleman's ſtatements of our commercial and manufacturing intereſts, they would appear equally erroneous, from the calculations which he himſelf had recently ſubmitted to the houſe, and of the accuracy and fairneſs of which the right hon. gentleman had declared his belief. By theſe it would be ſeen, that both theſe flouriſhed in a degree infinitely ſuperior to what had been ever known in former wars, and were even extenſively flouriſhing when compared to many years of peace.

With reſpect to our conduct toward the neutral powers, all the relations of peace, amity, and honour were inviolably preſerved by Great Britain: and the whole tenour of the conduct of miniſters with reſpect to America would, when examined with candour, be found conſiſtent with juſtice and policy, and all tending to that deſirable end, which had been recently achieved, namely, a treaty of peace and commerce with that country.

On the intereſting operations of the objects of the war, the ſentiments of miniſters had been ſo frequently declared, and had ſo uniformly met the ſanction of that houſe, that it was unneceſſary for him to ſay any thing farther on the ſubject; but he muſt differ from the right hon. gentleman, when he ſaid, that theſe objects ſhould be expreſsly defined, and always kept in view. The objects muſt always of neceſſity be ſubject to variation; and the idea was founded in ſtrict policy, which ſuggeſted that they ſhould be changed and accommodated according to the exiſting circumſtances; neither was it proper, at all times, to hold thoſe out to the world.

Mr. Pitt proceeded to notice various ſtatements of the right hon. gentleman, (thoſe, in particular, which related to the reſources and power of France) which he inſiſted to be founded in error; and he concluding by moving, 'That the houſe do now adjourn.'

Mr. Sheridan obſerved, that it certainly might be deemed preſumption in him to offer any remarks in addition to thoſe which had fallen from his right hon friend, which were ſo cogent in their own nature, as even to baffle the talents of the right hon. gentleman who had ſpoken laſt, in his attempt to anſwer them. But though a fair and explicit refutation of the arguments which had been urged in ſupport of the motion had been ſtudiouſly evaded, yet ample exertions had been uſed to miſ-

repreſent facts, and miſtate reaſonings, in order that concluſions, otherwiſe inevitable, might be avoided. After various other remarks, he ſaid, that he was firmly perſuaded of the juſtice, propriety, and neceſſity of the motion; and, in ſupport of this aſſertion, he did not mean to urge the many arguments which had been hitherto brought forward againſt the war, by thoſe who had been its uniform opponents: he would concede, that the great majority of the nation were in favour of theſe hoſtilities in their commencement, that the ſame majority ſupported them in their continuance, and were well perſuaded they might be ultimately brought to a ſucceſsful iſſue. But of this party he would take upon himſelf to ſay, that ten to one were perſuaded that it was requiſite that the hands which conducted the war ſhould be changed. There was not a partial opinion as to the abſurdity and weakneſs of the plans which had been formed. In no country but this could ſuch a ſeries of blunders have been acted with impunity: under every other ſyſtem of legiſlation and policy the authors of them would have been conſigned to contempt, or doomed to puniſhment. As to the conduct of our allies, experience had perfectly convinced him that an enquiry was abſolutely requiſite. The king of Pruſſia had entirely departed from the terms of the treaty he had concluded: the ſame might be ſaid of the empreſs of Ruſſia, who had never yet fulfilled one of the ſtipulations to which ſhe was pledged. Thus far as to our proſpect of effectual aſſiſtance from our continental alliances; but while he depreciated their value and deſpiſed their importance, he hoped not to be underſtood as endeavouring to vilify Britiſh character, or debaſe Britiſh valour. The conqueſt of the Weſt India iſlands had crowned them with laurels, and even their recent retreat before the numerous hoſts of the French had reflected the higheſt honour upon the officers and men concerned in it.

With reſpect to the conduct of the Britiſh cabinet toward neutral powers, Mr. Sheridan aſſerted, that the language of our miniſters abroad muſt have been authorized at home; for it had been uniformly the ſame to every foreign court, and all had been treated with inſolence, contempt, and arrogance. All this, however, had been contended by the right hon. gentleman to be perfectly conſiſtent with the law of nations; but it was ſomewhat ſingular that ſuch different modes of interpreting that law had been adopted, according to the relative value and power of each individual ſtate. Toward Denmark, Sweden, and the United States, we had thought proper to behave with the utmoſt ſubmiſſion; while with the groſſeſt pride we inſulted the petty ſtates of Italy, and loudly called upon them to abandon their neutrality. On what principles of the law of nations, he would aſk, could that neutrality be imputed to them as a crime? Had not his majeſty, in a ſpeech from the throne, expreſsly ſtated the neutrality which he had obſerved, as a principal ground of aggravation of the hoſtilities he had received from the French? And if thoſe hoſtilities had not been ſhewn toward other nations, thoſe nations were ſurely juſtified in preſerving a neutrality which had never yet been violated. As to the affairs of Ireland, it was, indeed, a moſt ſingular remark of the right hon. gentleman, that the preſent motion, both in its origin and diſcuſſion, particularly applied to them, when the houſe could not but recollect that his right hon. friend had ſpoken for at leaſt three hours on various other topics, without in the ſlighteſt degree touching upon them. Nay, more, notice had been given of the preſent motion before any account of the recent changes in Ireland had been known, and therefore all remarks on that head muſt neceſſarily fall to the ground. It certainly was a ground of aggravation in the miſconduct of miniſters, that, in addition to the other calamities they had brought upon the country, they had now contrived to embroil Great Britain and Ireland, and burſt the bands which had hitherto united them together. The right hon. gentleman ſeemed particularly zealous for the independence of the Iriſh parliament; but though on this head he might be ſuppoſed to be as warm as any man, yet, as a Britiſh ſenator, he could not help declaring, that he could not ſee how that independence could be injured by referring the reciprocal ſituation of the two kingdoms as a matter of enquiry to a committee of the Britiſh houſe of commons. This was indeed the ſecond attempt which had been made during the preſent adminiſtration to deprive the people of Ireland of their rights, or to refuſe them their complete enjoyment. Such was the juggling attempt in the year 1785, when, what were uſually called the Iriſh propoſitions, had been brought forward, and ſuch would probably be the tendency of any propoſal which would now be made to reſtore good underſtanding between the ſiſter kingdoms. The right

hon. gentleman had likewiſe thought proper to animadvert upon what had been ſaid as to the neceſſity of ſpecifically pointing out the objects of the war; and contended, that from neither of the extreme caſes which had been put, could we juſtly take our ground of proceeding. But the effect of avoiding them, and of adopting the middling courſe between them, had been, that the one deſtroyed the other, and the return to royalty, if the nation were ſo diſpoſed, had been rendered impoſſible. Such was the effect of our temporizing policy with regard to France; and perhaps the great diſunion which prevailed among the allies might, in ſome meaſure, be aſcribed to the ſame ſource.

Mr. Wilberforce, feeling himſelf bound to vote in oppoſition to the motion of this night, and fearing leſt it might appear to differ from the vote which he gave on the firſt night of the ſeſſion, conceived it neceſſary that his vote ſhould not be a ſilent one: he was adverſe to the enquiry moved by the right hon. gentleman, becauſe he thought it highly impolitic, and might be equally injurious at the preſent critical moment, particularly with reſpect to Ireland, in the ticklish ſituation in which that country now ſtood. He however begged leave to differ from the aſſertion of a right hon. member (Mr. Pitt) that there was no difference in the ſtate of affairs now, and at the commencement of the ſeſſion. On the contrary, if he thought peace a deſirable object then, he was ſtill of opinion it was more ſo now. The general ſituation of affairs, the loſs of our trade, the dereliction of our allies, the extinguiſhing the revolt in La Vendee, and the apparent pacific diſpoſition of the preſent rulers in France, all tended to convince him not only of the deſirableneſs, but the practicability, and even likelihood of a ſpeedy termination to hoſtilities; a ſubject which, if nobody elſe took up, he ſhould think it neceſſary to bring forward, to offer ſome propoſition in the courſe of the preſent ſeſſion.

Mr. Fox, upon the queſtion being loudly called for, roſe to reply to what had been urged againſt him in the courſe of the debate. Upon the general argument that had been uſed on the other ſide of the houſe, he ſhould make this one obſervation—that if they conceived he wiſhed to argue the general queſtion of war and peace, he was much miſunderſtood: his motion went ſolely to an enquiry into the mode in which the war had been carried on. This motion had been objected to, becauſe, it had been ſaid, the event of ſuch enquiry might be to remove the preſent miniſters from the truſt repoſed in them. As far as his opinion went, he had no heſitation in ſaying, that ſuch would be the event of the enquiry: but were we to be precluded from that benefit through the fear of thoſe conſequences? or was the preſervation of their places to be urged as an objection againſt the inveſtigation of flagrant miſconduct? It had alſo been ſaid by the right hon. gentleman, that the removal of the preſent miniſtry might not be followed by the introduction of him, and thoſe with whom he had the honour to act. Perhaps not; he had already declared, in the courſe of the ſeſſion, that if his ſervices could be deemed beneficial to his country, he was not diſinclined to exert them; but this he would ſay, that not the king, nor all the princes in Europe combined, could make him any offers that could tempt him to carry on the war upon any other terms than ſuch as neceſſity and honour could juſtify.

It was objected to him, that he had delayed this motion to ſo late a period in the ſeſſion, and during the preſent critical ſituation of Ireland. He certainly had not delayed beyond the neceſſary buſineſs which had hitherto occupied that houſe; and if the right hon. gentleman was ſincere in ſaying he had no objection to the enquiry, excepting what related to Ireland, let him do ſo; and when they came to move for the neceſſary papers, let him negative thoſe which regard that country. With reſpect to that country, he could not forbear ſaying a few words more. He had no heſitation in declaring his opinion, that whatever ſhould take place there, the fault would lie at the miniſter's door; and he had as little doubt but that the noble earl preſiding there would fully juſtify himſelf; but wherever there was miſconduct, there ſhould the blame and cenſure of the country fall. Let the blame be imputable where it may, all ſides muſt agree there is danger with reſpect to Ireland; and ſhall not miniſters be called to account for the part they appear to have taken in the buſineſs? He was the fartheſt of any man from thinking that ſucceſs ſhould be the criterion of merit; but he would aſk whether a general failure in every undertaking was not to be taken *prima facie* as a ſufficient ground of enquiry? But the right hon. gentleman ſaid, that reſort would not be had to ſuch as would lower this country. This he conſidered as a moſt extraordinary aſſertion from the man,

who, of all others, had, in every undertaking, ſo lowered the dignity and injured the intereſts of the country. Of himſelf he would truly ſay, he had never debaſed nor ſunk her glory: he would have treated with France before the conteſt began, the other muſt negotiate after being beaten: he would have treated when the event was at leaſt uncertain, when we might have had allies, and not without hopes; the other muſt treat when nobody can doubt as to the termination of the conteſt, and after having been deſerted by our allies.

The queſtion being loudly called for, the houſe divided on the queſtion of adjournment, ayes 219; noes 63.

[To be continued.]

FROM THE LONDON GAZETTES.

The London Gazette, March 31.

Admiralty-Office, March 28.

Extract of a letter from Sir Edward Pellew, Captain of his Majeſty's ſhip Indefatigable, dated Falmouth, March 23, 1795, to Mr. Nepean.

HAVING ſailed agreeable to my letter of the 1ſt inſtant, I proceeded in execution of my orders. I have now to communicate the return of his majeſty's ſhip under my command to this port; and beg you will be pleaſed to inform their lordſhips, that having received information from the maſter of a ſhip which I chaſed, that a convoy of ſixty ſail were to leave Breſt on the 7th, in the morning for Bourdeaux, protected by three frigates, I placed the ſquadron under my command as near the Penmarks as poſſible, and at day-light ſaw twenty-five ſail cloſe among the rocks, under guard of one ſmall armed ſhip. Fifteen of this number were taken and deſtroyed, the remainder ran between the rocks in ſuch a manner as to render any attempt of mine to purſue them fruitleſs.

Out of eight taken, two are laden with building timber, one with bale goods, and one partly with ſugar, indigo, and ſome bales of linen. Two ſhips, three brigs, and two ſloops were burnt.

The London Gazette Extraordinary, Tueſday April 7.

Admiralty-office, April 6.

A Diſpatch, of which the following is a copy, was this evening received from vice admiral Hotham, commander of his majeſty's ſhips and veſſels in the Mediterranean.

Sir, Britannia, at Sea, March 16.

YOU will be pleaſed to inform their lordſhips, that on the 8th inſtant, being then in Leghorn road, I received an expreſs from Genoa, that the French fleet, conſiſting of fifteen ſail of the line and three frigates, were ſeen two days before off the Iſle of Marguerite, which intelligence correſponding with a ſignal made from the Mozelle, then in the offing, for a fleet in the north weſt quarter, I immediately cauſed the ſquadron to be unmoored, and at daybreak the following morning we put to ſea with a ſtrong breeze from the ENE.

The Mozelle previouſly returned to me, with the information, that the fleet ſhe had ſeen were ſteering to the ſouthward, and ſuppoſed to be the enemy; in conſequence of which I ſhaped my courſe for Corſica, leſt their deſtination ſhould be againſt that iſland, and diſpatched the Tarleton brig to St. Fiorenzo, with orders for the Berwick to join me with all poſſible expedition off Cape Corſe; but, in the courſe of the night, ſhe returned to me with the unwelcome intelligence of that ſhip's having been captured two days before by the enemy's fleet.

To treſpaſs as little as poſſible upon their lordſhips time, I ſhall not enter into a detail of our proceedings until the two ſquadrons got ſight of each other, and the proſpect opened of forcing the enemy to action, every movement which was made being directed to that object, and that alone.

Although the French ſhips were ſeen by our advanced frigates daily, yet the two ſquadrons did not get ſight of each other until the 12th, when that of the enemy was diſcovered to windward.

Obſerving them on the morning following ſtill in that direction, without any apparent intention of coming down, the ſignal was made for a general chace, in the courſe of which, the weather being ſqually, and blowing very freſh, we diſcovered one of their line of battle ſhips to be without her topmaſts, which afforded to captain Freemantle, of the Inconſtant frigate, (who was then far advanced on the

chaſe,) an opportunity of ſhewing a good proof of Britiſh enterprize, by his attacking, raking, and haraſſing her, until the coming up of the Agamemnon, when he was moſt ably ſeconded by Captain Nelſon, who did her ſo much damage as to diſable her from putting herſelf again to rights: but they were at this time ſo far detached from our own fleet, that they were obliged to quit her, as other ſhips of the enemy were coming up to her aſſiſtance, by one of which ſhe was ſoon afterward taken in tow.

Finding that our heavy ſhips did not gain on the enemy during the chaſe, I made the ſignal for the ſquadron to form upon the larboard line of bearing, in which order we continued for the night.

At day-light the next morning (the 14th) being about ſix or ſeven leagues to the ſouth-weſt of Genoa, we obſerved the enemy's diſabled ſhip, with the one that had her in tow, to be ſo far to leeward, and ſeparated from their own ſquadron, as to afford a probable chance of our cutting them off. The opportunity was not loſt; all ſail was made to effect that purpoſe, which reduced the enemy to the alternative of abandoning thoſe ſhips, or coming to battle.

Although the latter did not appear to be their choice, they yet came down (on the contrary tack to which we were) with the view of ſupporting them: but the Captain and Bedford, whoſe ſignals were made to attack the enemy's diſabled ſhip and her companion, were ſo far advanced, and ſo cloſely ſupported by the other ſhips of our van, as to cut them off effectually from any aſſiſtance that could be given them; the conflict ended in the enemy's abandoning them, and firing upon our line as they paſſed with a light air of wind.

The two ſhips that fell proved to be the Ca-ira (formerly the Couronne,) of 83 guns, and the Cenſeur of 74.

Our van ſhips ſuffered ſo much by this attack, particularly the Illuſtrious and Courageux, (having each loſt their main and mizen maſts,) that it became impoſſible for any thing further to be effected.

I have however good reaſon to hope, from the enemy's ſteering to the weſtward, after having paſſed our fleet, that whatever might have been their deſign, their intentions are for the preſent fruſtrated.

The French fleet were loaded with troops; the Ca-ira having thirteen hundred men on board, and the Cenſeur one thouſand, of whom, by their obſtinate defence, they loſt in killed and wounded between three and four hundred men.

The efforts of our ſquadron to ſecond my wiſhes for an immediate and effectual attack upon the enemy, were ſo ſpirited and unanimous, that I feel peculiar ſatisfaction in offering to their lordſhips my cordial commendation of all ranks collectively. It is difficult to ſpecify particular deſerts, where emulation was common to all, and zeal for his majeſty's ſervice the general deſcription of the fleet.

It is, however, an act of juſtice to expreſs the ſenſe I entertain of the ſervices of captain Holloway, of the Britannia; during a long friendſhip with that officer, I have had repeated proofs of his perſonal and profeſſional talents; and on this recent demand for experience and information, his zeal afforded me the moſt beneficial and ſatisfactory aſſiſtance.

Herewith I tranſmit a liſt of the killed and wounded on board the different ſhips of the ſquadron, and have to lament the loſs of captain Littlejohn, of the Berwick, (who I underſtand, from ſome of her men that were retaken in the Ca-ira,) was unfortunately killed the morning of the ſhip's being captured; by which misfortune his majeſty has loſt a moſt valuable and experienced officer, and I have only to add that he has left a widow and four ſmall children.

I am, Sir, &c.

W. HOTHAM.

P. S. Incloſed, are liſts of the ſhips that compoſed the two ſquadrons of the 14th inſt.

I am now on the way with the prizes to St. Fiorenzo, but doubt much whether it will be poſſible to get them in, as they are diſmaſted, greatly ſhattered, and very leaky, particularly the Ca-ira.

KILLED.

Mr. Coleman, midſhipman, of the Courageux, and 74 ſeamen or marines.

WOUNDED.

Lieut. Honeyman of the St. George; lieut. Hawker of the Windſor Caſtle; Mr. Hunter, maſter, and lieut. Rathbone, of the Captain; Mr. Moore, midſhipman, of the Illuſtrious; Mr. Blackburn, maſter of the Courageux; lieut. Miles, of the Bedford; Mr. Wilſon, maſter of the Agamemnon; and 273 ſeamen or marines.

ORDER of BATTLE, March 14, 1795.

Van Squadron under the Commander in the Second Poſt.

Starboard or Weather Diviſion.—Vice Admiral Goodall.

Ships	Commanders	Gu.	Men
Captain	Capt. Reeve	74	590
Bedford	Capt. Gould	74	590
Tancredi	Capt. Le Chevalier Caraccioli	74	600
Princeſs Royal	Capt. Purvis	90	760
Agamemnon	Capt. Nelſon	64	491

Loweſtoffe, repeating frigate.—Tarleton, Palade, Poulette, and Minerva frigates.

Centre Squadron, under the Commander in Chief.

Vice Adm. Hotham.—Rear Adm. Linzee.

Illuſtrious	Capt. Frederick	74	590
Courageux	Capt. Montgomery	74	640
Britannia	Capt. Holloway	100	859
Egmont	Capt. Sutton	74	550
Windſor Caſtle	Capt. Gore	90	755

Inconſtant, Meleager, to repeat ſignals.

Rear Squadron, under the Commander in the Third Poſt.

Larboard or Lee Diviſion.—Vice Adm. Sir H. Parker.

Diadem	Capt. Tyler	64	491
St. George	Capt. Foley	90	760
Terrible	Capt. Campbell	74	590
Fortitude	Capt. Young	74	590

Romulus, repeating frigate.—Fox cutter.

W. HOTHAM.

Names of the Ships which compoſed the French Fleet, March 14, 1795.

Names.	Gu.	Com. of men.	Time of acti.
Le Sans Culotte	120	1200	2000
Le Victoire (late Languedoc)	80	950	1300
Le Tonnant	80	950	1300
Le Guerrier	74	730	1000
Le Conquerant	74	730	1000
Le Mercure	74	730	1000
Le Barras	74	730	1000
Le Genereaux	74	730	1000
Le Hercux	74	730	1000
Le Duqueſne	74	730	1000
Le Timoleon (late Commerce de Bourdeaux)	74	730	1000
Le Ca-ſra (taken)	80	950	1000
Le Cenſeur (taken)	74	930	1000
L'Alcide	74	930	1000
Le Souverain	74	930	1000
La Veſtal	32	250	250
La Minerve	40	300	300
La Thamiſe	40	300	300
L'Alceſte	32	250	250
Scout	18	120	120
La Hazard	20	120	120

W. HOTHAM.

From the London Gazette, April 18.

Admiralty-Office, April 18.

Extract of a letter from Rear-Admiral Colpoys to Mr. Nepean, dated on board his majeſty's ſhip, London, at Spithead, the 16th of April.

PLEASE to acquaint the lords of the admiralty of my arrival here with his majeſty's ſhips under my command.

That on the 29th of March Le Jean Bart, a French corvette, of 20 guns, and 120 men, bound to Breſt, was captured by his majeſty's ſhips Cerberus and Santa Margaretta; ſhe had been charged with diſpatches from the French miniſter in America.

That on the 30th of March the Robuſt recaptured the Caldicot Caſtle, of Chepſtow, from Barcelona, bound to Guernſey; ſhe was taken on the 18th of March, off Cape St. Vincent's, by ſix French ſhips of the line, two frigates, and a corvette.

That on the 10th inſtant we diſcovered and gave chace to three French frigates, which ſoon ſhaped different courſes. I made the ſignal for the Hannibal and Robuſt to follow the two which pointed moſt to the weſtward. The Aſtrea, lord Henry Powlett, with his accuſtomed promptitude and attention, kept after the largeſt and ſeemingly beſt goer of the three, with which he cloſed about ten o'clock at night, and obliged her to ſurrender, after a well fought action of 58 minutes, which does great credit to his lordſhip's good conduct, as well as the diſcipline of his officers and ſhip's company. The particulars I tranſmit in a copy of his lordſhip's letter to me, which accompanies this.

P. S. The Robuſt joined me off the Iſle of Wight. Captain Thornborough reports that La Gentille of 40 guns, was taken on Saturday laſt by the Hannibal, but that La Fraternite eſcaped.

Copy of a letter from Lord Henry Powlett, Captain of his majeſty's ſhip Aſtrea, to Rear-Admiral Colpoys, dated at Sea, the 11th of April, 1795, lat. 49 30 N, lon. 10 46 W.

Sir,

In obedience to your ſignal from the London, yeſterday morning, I gave chace to the north-weſt, and at ten o'clock at night came up with and engaged La Gloire, French national frigate, mounting 26 twelve-pounders on the main deck, 10 ſix-pounders and 4 thirty ſix-pounder

carronades on the quarter deck, and 2 ſix-pounders on the forecaſtle; having on board 275 men. After a cloſe action of 58 minutes, ſhe ſtruck.

It is very ſatisfactory to me to be able to ſay, that I had no perſon killed, and only eight men wounded: three of them, I am ſorry to add, are in ſome danger. I am alſo ſorry to ſay that the ſlaughter on board the enemy has been very conſiderable: the killed and wounded, from the beſt accounts I have been able to collect, amounting to 40: among the latter is her captain, citizen Beens, who received a contuſion on his head. He ſeems to be an able, humane, and intelligent officer.

I have ſent Mr. Talbot, my firſt lieutenant, on board La Gloire, which will I hope meet your approbation. I muſt not omit to mention the juſt ſenſe I entertain of his ſervices and good conduct upon this occaſion; and it gives me the greateſt pleaſure to add, that the conduct of the officers and ſhip's company in general afforded me particular ſatisfaction.

The two frigates, after which you diſpatched his majeſty's ſhips Hannibal and Robuſt, are exactly of the force with La Gloire. They had been three weeks out from Breſt, and had made but one capture, a ſmall Spaniſh brig. I am, &c.

H. POWLETT.

CONCLUSION *of the* TRIAL *of* WARREN HASTINGS, *Eſq.*

ON Thurſday, April 23, the lords met in their own houſe at twelve. The peereſſes' gallery was completely filled before one. The commons, with the ſpeaker, came into their ſeats at half an hour after one. The ſtadtholder, with his lady and family, were received into the queen's apartment. The Turkiſh ambaſſador and his retinue ſat in their ſeats. All the ambaſſadors from the ſeveral courts of Europe were preſent. At half paſt one, the proceſſion of the lords moved to Weſtminſter-hall.

The managers having taken their places, proclamation for ſilence was then made, and the accuſed called to the bar.

Mr. Haſtings came to the bar, attended by the uſher of the black rod; and having made his obeiſance to the court, was ordered to withdraw.

Lord Chancellor.—The lords have ordered that the following queſtions be put to your lordſhips. [Here followed the 16 articles.]

Firſt, "Is Warren Haſtings, eſq. guilty or not guilty of high crimes and miſdemeanors, charged by the commons in the firſt article of charge?" [the charge of Cheyt Sing.]

Lord Chancellor to the junior Baron—"How ſay you, my lord Douglas, is Warren Haſtings, eſq. guilty of the high crimes and miſdemeanors contained in this charge in the impeachment, or not guilty?"

Baron Douglas (Earl of Morton) roſe, and placing his right hand on his left breaſt, ſaid, "Not guilty, upon mine honour."

The ſame queſtion was then put to the following noble lords, who gave the verdict annexed to their names in the ſame form:

Lord Fife—Not guilty.
Lord Somers—Not guilty.
Lord Rawdon—Not guilty.
Lord Walſingham—Not guilty.
Lord Thurlow—Not guilty.
Lord Hawke—Not guilty.
Lord Boſton—Not guilty.
Lord Sandys—Not guilty.
Lord Middleton—Not guilty.
Biſhop of Rocheſter—Not guilty.
Biſhop of Bangor—Not guilty.
Lord Viſcount Sidney—Not guilty.
Lord Viſcount Falmouth—Not guilty.
Earl of Caernarvon—*Guilty.*
Earl of Dorcheſter—Not guilty.
Earl of Beverley—Not guilty.
Earl of Radnor—*Guilty.*
Earl Fitzwilliam—*Guilty.*
Earl of Warwick—Not guilty.
Earl of Coventry—Not guilty.
Earl of Suffolk—*Guilty.*
Marquis Townſend—Not guilty.
Duke of Bridgewater—Not guilty.
Duke of Leeds—Not guilty.
Duke of Norfolk—*Guilty.*
Earl of Mansfield—Not guilty.
Archbiſhop of York—Not guilty.
Lord Loughborough, pronounced *Guilty.*

Thus, on the firſt queſtion, twenty-three peers pronounced Mr. Haſtings Not guilty. Six pronounced him guilty.

The other queſtions were then put in the ſame form; and the verdicts upon all the queſtions, when the numbers were ſummed up, appeared thus—

Charge.	Not G.	G.
1. Cheyt Sing - -	23	6
2. Begums - -	23	6
3. Preſents in 1772, 1773, 1774	28	0
4. Preſents from Sadanund	24	4
5. Ditto from Killeram -	24	3

Charge.	Not G.	G.
6. Preſents from Nundoolol	24	3
7. Ditto from the Vizier -	24	3
8. Ditto from Rajah Nobkiſſen	22	5
9. Opium Contract (Sullivan's)	22	5
10. Ditto - -	27	0
11. Bullock Contract -	24	3
12. Ditto - -	24	3
13. Allowance to Sir Eyre Coote	23	4
14. Appointment of Mr. Auriol to be Agent for Supplies	23	4
15. Ditto of Mr. Belli -	24	3
16. General Queſtion -	24	2

This laſt queſtion was—Is Warren Haſtings, eſq. Guilty, or Not Guilty, of the high crimes and miſdemeanors, or any of them, charged upon him by the reſidue of the impeachment of the commons?

The noble lords voted in the following manner:

Lords Douglas, Fife, Somers, Rawdon, Thurlow, Hawke, Boſton, Sandys, and Middleton; biſhops of Rocheſter, and Bangor; lord viſcounts Sidney, and Falmouth; earls of Dorcheſter, Beverley, Warwick, and Coventry; marquis Townſhend; dukes of Bridgewater, and Leeds; archbiſhop of York—*Not guilty* on all the queſtions.

Earl of Mansfield—*Not guilty* on all, except the 8th, on that *guilty*.

Lord Walſingham—*Not guilty* on all, except the 9th.

Earl of Caernarvon, earl Fitzwilliam, and the lord chancellor—*Guilty* on all, except queſtions 3 and 10.

Earl of Radnor—*Guilty* on the 1ſt, 2d, 8th, 9th, 13th, and 14th; *Not guilty* on all the reſt.

Earl of Suffolk—*Guilty* on the 1ſt, 2d, and 4th; *Not guilty* on the 3d. Retired.

Duke of Norfolk—*Guilty* on the 1ſt and 2d. Retired.

The number of biſhops who entered in the proceſſion was nine; of theſe, three gave their votes: the others waved their privilege on this occaſion. The peers who were managers, alſo declined voting.

Thoſe of their lordſhips who did not vote, ſtood near the throne unrobed.

Mr. Cowper, the clerk, having collected the votes, gave the numbers to the lord chancellor. His lordſhip ſaid—"My lords, and gentlemen of the houſe of commons, Warren Haſtings, eſq has been acquitted of the charge of high crimes and miſdemeanors, which have been preferred againſt him, by a large majority of the peers—"Call in Mr. Haſtings."

Sir Francis Molyneux went from his ſeat to conduct Mr. Haſtings to the bar.

Lord Chancellor.—"Mr. Haſtings, the houſe of lords, after a very minute inveſtigation, have acquitted you of all the charges of high crimes and miſdemeanors, preferred againſt you by the commons, and every article thereof; and you and your bail are diſcharged, upon your paying your *fees*."

Mr. Haſtings bowed very reſpectfully, and retired.

Thus has ended this impeachment, which, for length of time, has exceeded any tryal in the hiſtory of the world, having laſted ſeven years and three months.

HISTORICAL CHRONICLE.

APRIL 5.

THIS morning, between one and two o'clock, a very deſperate attempt was made to reſcue Iſdwell Iſdwell, a jew, who ſtood charged, with ſome others, with being concerned in a late forgery of ſtamps, and who, in a ſcuffle, loſt his life in the following manner: Iſdwell, who was confined in New Priſon, Clerkenwell, perſuaded two of the turnkeys, that an aunt of his, who was very rich, then lay at the point of death, and that he had been informed, that, could ſhe ſee him before ſhe died, ſhe would give him a thouſand pounds; and therefore, if they would let him out and accompany him to the place, he would give them fifty guineas each for their trouble; and that the matter might be effected without the knowledge of the keeper of the priſon, or any other perſon, they having the keys of it at night, and the time required being very ſhort. To this propoſal the turnkeys agreed; and accordingly, about one o'clock in the morning, the gates were opened, and Iſdwell, with his irons on, was conducted in a hackney coach by one of them, armed with a blunderbuſs, to the place directed, which was in Artillery-lane, Biſhopſgate-ſtreet, where they gained immediate admittance on ringing a bell; and, on enquiring for the ſick lady, were uſhered up one pair of ſtairs. Iſdwell went into the room firſt, on which ſeveral fellows ruſhed forth and attempted to keep the turnkey out, but not ſucceeding in that reſpect, they put the candles out, wreſted the blunderbuſs out of his hand, and diſcharged it at him; at this inſtant, it was ſuppoſed, Iſdwell was endeavouring

to make his eſcape out of the door, as he received the principal part of the contents of the blunderbuſs in his back, and fell dead; the turnkey alſo fell, one of the ſlugs having grazed the upper part of his head; and the villains, by ſome means finding their miſtake, though in the dark, beat him in ſo ſhocking a manner with the butt end of the blunderbuſs, while he lay on the ground, as to break it to pieces, fracture his ſkull in two places, and bruiſe him dreadfully about the body. The noiſe which the affair occaſioned, brought a number of watchmen and patroles to the houſe, who ſecured ten perſons therein, moſtly jews. There is every reaſon to ſuppoſe that they would have completely murdered the turnkey, had not timely aſſiſtance been afforded.

APRIL 10.

David Downie, condemned for high-treaſon at Edinburgh, but recommended to mercy by the jury, has received his majeſty's pardon, on condition of being impriſoned for a year, and afterward baniſhing himſelf from Great Britain for life.

APRIL 13.

On Friday, in conſequence of an order from council, a new regulation took place in the cuſtom-houſe reſpecting American veſſels, no one being permitted to finally clear out until the captain makes affidavit that there are no Britiſh ſubjects going out paſſengers or otherwiſe, without having a regular paſſport from the ſecretary of ſtate; alſo to make oath to the place of birth and age of each of the ſhip's crew. This ſeems a very wiſe and prudent regulation, to ſtop in ſome meaſure the emigration of our valuable artificers and mechanics, who have of late, by falſe and favourable accounts, been artfully ſeduced to try their fortunes in a foreign land.

APRIL 16.

Court at St. James', April 15.

Preſent the king's moſt excellent majeſty in council. . . . . It is this day ordered by his majeſty in council, that, in all parts of the public ſervice, where the royal family is appointed to be particularly prayed for, the following form and order ſhall be obſerved, viz. "Our gracious queen Charlotte, their royal highneſſes George prince of Wales, the princeſs of Wales, and all the royal family."

APRIL 18.

On Saturday 12 priſoners were tried at the Old Bailey, three of whom were capitally convicted, viz. Evan Morgan, for that he, being a perſon employed in the general poſt office, London, did feloniouſly ſteal a letter, containing a bill of exchange for the payment of 80l. the property of Mary Harris; William Langdon, for ſtealing in the houſe of Samuel Swan 42 yards of fuſtian, value 6l.; and Matthew Dunn, for the wilful murder of Thomas Price, a watchman, in Doctor's Commons, by firing at him with a carbine loaded with ſlugs, one of which entered his breaſt, and killed him on the ſpot, and received judgment of death, to be executed this day, and afterwards his body to be anatomized. Four were convicted of felony, and five acquitted.

APRIL 21.

Yeſterday morning, a little before eight o'clock, Matthew Dunn, who received ſentence on Saturday for the wilful murder of Price the watchman, was brought out of Newgate, and being ſeated in a kind of chair on an elevated platform, covered with black, in a cart, attended by the proper officers, was conveyed in ſolemn proceſſion along Newgate-ſtreet, and down the Old Change to the corner of Carter lane, Paul's Chain, near to the ſpot where the murder was committed. Being arrived at the place of execution, after about twenty minutes ſpent in prayer, he was turned off. He conducted himſelf with great propriety; and after hanging the uſual time, the body was conveyed to Surgeons hall for diſſection.

Yeſterday, William Tilley, George Hardwick, James Hayden, John Henley, John Delancy, William Handland, Simon Jacobs, John Solomon, and John Phillips, were tried at the Old Bailey, for the wilful murder of Iſdwell Iſdwell; by maliciouſly levelling and firing a blunderbuſs at John Day, for the purpoſe of effecting the eſcape of the ſaid Iſdwell, he being committed on a charge for a capital offence.—The trial laſted from eleven o'clock yeſterday morning till paſt one this morning. The jury were out about a quarter of an hour, and then returned a verdict of—*Not Guilty*.

The principal evidences were Day, the underkeeper of the gaol, and Solomons, a man of a very bad character, who had turned evidence; and the former was prevailed on by the deceaſed to let him out of the gaol.

They are all detained, to take their trial for a conſpiracy, to reſcue the deceaſed out of the hands of juſtice.

Shrewſbury, April 17. At our town ſeſſions on Monday laſt, Mahomet Benally, for ſeditious words, damning the Britiſh king, and being in England contrary

to the alien act, was ſentenced to 14 days impriſonment in the houſe of correction to hard labour and ſolitary confinement; and at the expiration of that time to be delivered over to ſuch perſon as his majeſty ſhall think proper to direct.

The magiſtrates at this ſeſſions agreed with the Coinbrook Dale company, to caſt an iron bridge of one arch, over the river Severn at Buildwas; the ſpan of which is to be one hundred and thirty feet, the width of the paſſage-way eighteen feet; and to erect the ſame in nine months, for the ſum of 3,7col. being conſiderably leſs than if the ſame had been erected of ſtone.

APRIL 23.

Yeſterday at the Old Bailey, ſentence was paſſed on 11 capital convicts, who received judgment of death, 20 were ordered to be tranſported for 7 years, ſix to be impriſoned in Newgate, ſix in the houſe of correction at Clerkenwell, two to be publicly whipped, one to be fined one ſhilling, and diſcharged, and eight had their judgments reſpited, to give them an opportunity to ſerve as ſoldiers or ſailors.

John Catapodi, John Wadſworth, alias George Hopwood, Wm. Clinch, Thomas Booth, Maria Perres, alias Ferres, Anne Lamb, and Anne Clarke, who had been capitally convicted, but their judgments reſpited during pleaſure, received ſentence to be tranſported to New South Wales, or ſome one or other of the iſlands adjacent, for the term of their natural lives.

Thomas Thomas, for ſtealing letters out of the Briſtol mail-bag, is among thoſe ſentenced to ſeven years' tranſportation.

The ſeſſions being then ended, the ſame were adjourned until Wedneſday, the 20th of May next.

BIRTH.

PRinceſs of Braſil, a ſon.

MARRIAGES.

EARL of Dalkeith, to the hon. miſs Harriet Townſhend, daughter of viſcount Sydney.

Hon. Robert Banks Jenkinſon, to lady Louiſa Hervey.

Hon. and Rev. Richard Bourke, ſecond ſon of the late earl of Mayo, archbiſhop of Tuam, to miſs Frances Fowler, daughter of the archbiſhop of Dublin.

Captain Patrick Hunter, to the hon. miſs Jane Rollo, daughter of the late James lord Rollo.

Lately, Dr. Vaughan, phyſician extraordinary to his majeſty, to the hon. Eliſabeth Barbara St. John, ſiſter to lord St. John of Bletſoe.

Lord Torpichen, to miſs Inglis, daughter of ſir John Inglis, bart.

John Egerton, eſq. of Oulton Park, Cheſhire, to miſs Maria Scott Jackſon, daughter of Thomas Scott Jackſon, eſq. a director of the Bank.

Sir Harry Burrard, bart. to miſs Neale, daughter of the late Robert Neale, eſq. of Shaw Houſe, Wilts.—Sir Harry takes the name of Neale.

DEATHS.

LIeutenant-general ſir William Erſkine, bart.

Hon. and Rev. St. Andrew St. John, ſecond ſon of John 10th lord St. John of Bletſoe.

Lewis Monſon Watſon, lord Sondes.

Sir Richard Bedingfield, bart.

Sir George Collier, knt. vice admiral of the blue.

Sir Alexander Livingſtone, bart.

Mr. Worſley, only ſon of ſir Richard Worſley, bart.

Hon. Philip Tufton Percival, brother to the earl of Egmont.

Lady Sarah Anneſley, daughter of the earl of Mountmorris.

Lady Grantley.

Thomas Whitmore, eſq. M. P.

PROMOTIONS.

SUſannah baroneſs Hood, of the kingdom of Ireland—Baroneſs Hood of Great Britain.

Dr. John Law, biſhop of Killala and Achonry—Biſhop of Elphin.

Thomas Tyrwhitt, eſq.—Private ſecretary to the prince of Wales.

Sir George Chetwynd, of Brocton-hall, in the county of Stafford, and ſir John Dryden, of Canons Aſhby, in the county of Northampton, knts. Robert Saluſbury, of Llanwern, in the county of Monmouth, eſq. Richard Gamon, of Minchenden-houſe, in the county of Middleſex, eſq. (with remainder to Richard Grace, of Rahin, in the Queen's county and kingdom of Ireland, eſq. and his iſſue male) Lionel Darell, of Richmond-hill, in the county of Surry, Richard Neave, of Dognampark, in the county of Eſſex, Henry Hawley, of Leybourne Grange, in the county of Kent, John Pollen, of Redenham, in the county of Southampton, eſqrs. and John Wentworth, eſq. lieutenant-governor of Nova Scotia—Baronets.

Sir Richard Hughes, bart. John Elliot and William Hotham, eſqrs. vice-admirals of the red—Admirals of the blue.

NEW PUBLICATIONS.

JOHNSTONE's Medical Eſſays and Obſervations, 8vo. 8s. 6d.

Morgan's (Mrs.) Tour to Milford Haven, 8vo. 8s. 6d.

Wheel of Fortune, a Comedy, 1s. 6d.

Anderſon's Narrative of the Britiſh Embaſſy to China, 4to. 1l. 5s.

Caſtle of Ollada, 2 vol. 12mo. 7s.

Hiſtory of the Colony of Sierra Leone, 8vo. 5s.

Chriſtall's (Ann) Poetical Sketches, ſmall 8vo. 6s.

Fowler on Blood-letting, &c. in the Rheumatiſm, 8vo. 6s.

Saumerez's Diſſertation on the Univerſe, 8vo. 6s.

Fawcett's Art of War, a Poem, 4to. 2s. 6d.

Taylor's Verſes on ſeveral Occaſions, 5s. boards.

Shakſpeare's Dramatic Works, by Rann, 6 vol. 8vo. 2l. 8s.

Cartwright's Commonwealth in Danger, 8vo 6s.

Drailoe's Epitome of Logic, 12mo. 4s.

Spence's (Mrs.) Poems and Miſcellaneous Pieces, 12mo. 6s.

Ware's Obſervations on the Cataract and Gutta Serena, 8vo. 3s. ſewed.

Dundonald's (Earl of) Connection between Agriculture and Chymiſtry, 4to. 1l. 5s.

Wyntowne's Orygynale Cronykil of Scotland, 2 vol. royal 8vo. 2l. 2s. boards.

Fothergill on the Suſpenſion of Vital Action in Suffocation, 2s. 6d.

Skrine's Tours in the North of England, and great part of Scotland, 8vo. 12s. boards.

Anecdotes of diſtinguiſhed Perſonages, 2 vol. 8vo. 16s.

Glandor's Poems, ſmall 8vo. 5s.

Adams' Obſervations on Morbid Poiſons, 8vo. 6s.

De Paw's Diſſertations on the Egyptians and Chineſe, 2 vol. 8vo. 14s.

Somerville's Addreſs to the Yeomanry of England, 1s.

England Preſerved, a Play, 2s.

Gifford's Letter to the Earl of Lauderdale, 3s. 6d.

Travell's Expoſition of the Athanaſian Creed, 1s.

Ward's Inquiry into the Hiſtory of the Law of Nations in Europe, 2 vol. 8vo. 17s.

Secrecy, or the Ruin on the Rock, 3 vol. 12mo. 10s. 6d.

AVERAGE PRICES OF CORN.

April 18, 1795.

By the Standard Winchester Quarter of Eight Bushels.

INLAND COUNTIES.

	Wheat.		Rye.		Barley.		Oats.	
	s.	d.	s.	d.	s.	d.	s.	d.
Middleſex	68	3	42	9	36	10	28	7
Surry	67	0	36	0	38	0	29	0
Herriford	64	2	——		36	3	25	8
Bedford	63	2	——		35	3	25	1
Huntingdon	60	2	——		34	8	23	2
Northampton	61	0	44	0	34	6	24	9
Rutland	61	6	——		30	6	22	0
Leiceſter	64	4	——		39	6	25	7
Nottingham	68	4	45	0	42	10	25	6
Derby	66	6	——		42	3	25	6
Stafford	66	0	——		43	4	25	7
Salop	64	1	51	6	39	9	26	0
Hereford	59	2	44	10	39	4	28	3
Worceſter	63	7	——		40	10	30	8
Warwick	65	2	——		41	5	28	5
Wilts	61	0	——		37	10	26	8
Berks	66	9	——		35	1	28	1
Oxford	60	4	——		37	4	26	8
Bucks	65	6	——		35	2	27	2
Brecon	65	8	54	4	41	4	24	0
Montgomery	62	10	——		33	7	24	10
Radnor	58	11	——		36	2	25	4

MARITIME COUNTIES.

Eſſex	67	0	28	6	34	6	29	4
Kent	63	3	37	0	33	0	25	1
Suſſex	61	10	——		35	9	25	0
Suffolk	63	11	42	0	33	11	25	11
Cambridge	59	5	41	8	31	10	20	4
Norfolk	63	0	41	2	32	6	25	9
Lincoln	58	10	43	0	36	0	21	4
York	54	11	40	8	33	9	21	10
Durham	55	4	——		——		24	0
Northumberland	53	4	38	9	29	7	21	6
Cumberland	54	2	48	4	31	6	21	1
Weſtmorland	60	0	46	0	32	8	21	11
Lancaſter	65	10	——		37	0	22	6
Cheſter	62	4	——		——		25	3
Flint	60	4	——		41	7	22	4
Denbigh	66	9	——		41	6	20	10
Angleſea	——		——		33	0	15	6
Carnarvon	62	4	48	0	40	0	19	8
Merioneth	64	1	52	6	39	0	25	0
Cardigan	55	1	44	0	31	11	15	9
Pembroke	47	7	——		34	2	16	8
Carmarthen	54	8	——		30	0	16	0
Glamorgan	62	8	——		36	6	21	1
Glouceſter	62	3	——		38	5	27	6
Somerſet	61	10	——		36	1	22	4
Monmouth	61	11	——		38	11	——	
Devon	70	5	——		32	1	21	10
Cornwall	62	3	——		31	10	20	2
Dorſet	62	9	——		33	1	——	
Hants	64	8	——		30	9	25	6

Peck Loaf, 3s. 1d.

PRICES of STOCKS, from MARCH 28, to APRIL 27, 1795, both inclusive.

By ANTHONY CLARKE, Stock-Broker, No. 13, Sweeting's-Alley, Cornhill.

1795	Bank Stock.	3 per C. reduced.	3 per C. consols.	4 per C. consols.	5 per C. consols.	Long Ann.	Short Ann.	India Stock.	India Bonds.	South Sea Stock.	Old Ann.	New Ann.	Navy Bills.	English Lot. Tic.
28	shut.	shut.	62a⅜	shut.	95 ⅜			182	2r. dif.		shut.		3 dif.	
30	153		62⅛a62	78 ⅜	95 ⅜			182	2				2 ⅛	
31	153		62⅛a62⅜	78 ⅜	95 ⅜			182	2				2 ⅛	
1	153		62⅜		95 ⅜				3				2 ⅛	
2	153 ⅛		62⅜a62	78 ⅛	95 ⅜				3				2 ⅜	
3														
4			62⅛a62	78 ⅛				181 ⅛	2				3	
6														
7														
8	152 ⅛		61⅞a⅞		95 ⅜			181	2				3 ⅛	
9	152 ⅛		61⅛a⅜		95			182	2				3 ⅛	
10	152 ⅛		61⅛a⅞					183					2 ⅜	
11			61⅞a62		95 ⅛			183					2 ⅜	
13	153 ⅛		62⅛a62⅛	78 ⅛	95 ⅛			183 ⅛					2 ⅜	
14	153		62⅛a62	78 ⅜	95 ⅛			183					3	
15	153 ⅛		62⅛a⅜		95 ⅛								3	
16	153		62⅜a⅝		95 ⅛			183 ⅛					2 ⅞	
17	156		62⅝a64⅛		96 ⅛			185 ⅛					2 ⅞	
18	158		64⅛a⅜		96								2 ⅞	
20	158		64⅜a64	77 ⅜	96 ⅛	28 ⅛		188 ⅛			64		2 ⅞	
21	158		63⅞a64⅛		96 ⅛	28 ⅛		188					2 ⅞	
22	160 ⅛		64⅛a65⅛		98	28 ⅛	8 ⅛	191 ⅛					2 ⅞	
23	163 ⅛		65⅛a66		99 ⅛	28 ⅛	8 ⅛	193					2	
24	162	65 ⅛	65⅛a64⅛		99 ⅛	28 ⅛	8 ⅛	192 ⅛	4				2 ⅛	
25			65⅜a64⅞	78 ⅛	98 ⅛								2 ⅛	
27	158 ⅛	65 ⅛	65⅛a⅜	78 ⅛	99 ⅜	28 ⅛	8 ⅛	192					2 ⅛	

☞ In the 3 per Cent. consols. the highest and lowest Price of each Day is given; in every other Article the highest Price only, the Long and Short Annuities excepted which are given within a fifteenth of the highest Price. In the different Funds that are shut, the Prices are given with the Dividend till the Days of Opening.

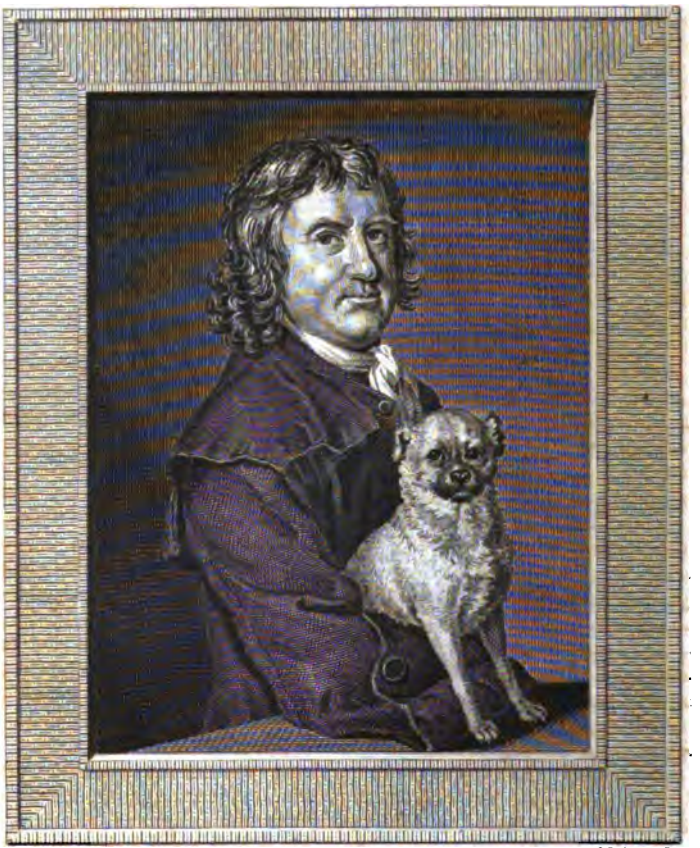

R. Phelps pinx. J. Baker sculp.

BAMPFYLDE MOORE CAREW.

King of the Beggars.

UNIV. OF MICH.

Some Account of BAMPFYLDE MOORE CAREW, *commonly called the* KING *of the* BEGGARS: *With a Portrait of that eccentric Character.*

AMONG the great variety of characters, which a hiſtory of human nature would exhibit, there are ſome which deſerve attention, not for any eminence in virtue, on the one hand, or uncommon depravity of mind, on the other, but for a certain eccentricity of conduct, which, with the ſame advantages in life, no other perſon, perhaps, would imitate. Portraits of ſuch men, with ſome general traits of their character, are gratifying, not ſo much for any uſeful leſſons to be derived from their hiſtory and adventures, as for their being objects of curioſity; juſt as the philoſopher, who is fond of contemplating the beauties of creation, can advert, ſometimes, to the delineation of any uncommon object, the ſportive production of nature, in occaſional deviations from her general laws. Yet not wholly without uſe are theſe *human curioſities*. When the reader contemplates ſuch characters as that of Edward Wortley Montague and Bampfylde Moore Carew, who neglected all the advantages of birth, and fortune, and education, to aſſociate with the loweſt of mankind, he will perceive inſtances of a voluntary ſelf-degradation, that muſt excite the moſt mortifying reflections on the inconſiſtency, and even occaſional *irrationality* of the human character; and he may be led to this awful truth, that as the only way to riſe in moral excellence, and, in courſe, to happineſs throughout the whole of our being, is to cultivate our talents and advantages, and to form our minds to habits of virtue, in this ſtage of our exiſtence, ſo nothing can be more humiliating, than the ſight of a man of family, who, by long aſſociation with the low, ignorant, and unprincipled, loſes ſight of the moral principle, unfits himſelf for the ennobling duties of his ſtation, and expires, at laſt, without having once experienced the honourable diſtinctions, and ſoothing conſolations, which ſo happily reſult from the conſciouſneſs of a uſeful and well ſpent life.

Bampfylde Moore Carew, one of the moſt extraordinary and eccentric characters on record, was deſcended from an ancient and honourable family in the weſt of England. He was born in the year 1693, at Bickley, near Tiverton, in Devonſhire; of which place, his father, the reverend Theodore Carew, was many years rector. There never was known a more ſplendid appearance of perſons of the firſt diſtinction at any baptiſm in the county than were preſent at his: Hugh Bampfylde, eſq. and major Moore, of families equally ancient and reſpectable as that of Carew, were his godfathers; and from them he received his two Chriſtian names.

The Rev. Mr. Carew, who was univerſally eſteemed in the county, had ſeveral other children beſide Bampfylde Moore; all of whom he educated in a tender and pious manner. At the age of twelve, his ſon, the ſubject of this ſketch, was ſent to Tiverton ſchool, where he contracted an intimate acquaintance with young gentlemen of the firſt families in Devonſhire, and the adjacent counties.

During the firſt four years of his reſidence at Tiverton ſchool, his cloſe application and delight in his ſtudies gave his friends great hopes that he might one day appear with diſtinction in that honourable profeſſion, which his father became ſo well, and for which he himſelf was deſigned. He actually made a very conſiderable progreſs in the Latin and Greek languages. The Tiverton ſcholars, however, having at this time the command of a fine pack of hounds, Carew, and three other young gentlemen, his moſt intimate companions, attached themſelves with ſo much ardour to the ſport of hunting, that their ſtudies were ſoon neglected. One

day, unfortunately, the Tiverton ſcholars, with Mr. Carew and his three friends at their head, were engaged in the chaſe of a deer for many miles, juſt before the commencement of harveſt. The damage that was done to the fields of ſtanding corn was ſo great, that the neighbouring gentlemen and farmers came with heavy complaints to Mr. Rayner, the maſter of the ſchool, who threatened young Carew and his companions ſo ſeverely, that, through fear, they abſconded, and joined a ſociety of gipſies that happened to be then in the neighbourhood. This ſociety conſiſted of about eighteen perſons of both ſexes, who carried with them ſuch an air of mirth and gaiety, that our youngſters were quite delighted with their company, and expreſſing an inclination to enter into the ſociety, the gipſies admitted them, after the requiſite ceremonials had been firſt gone through, and the proper oaths adminiſtered; for theſe people are ſubject to a form of government and laws peculiar to themſelves, and all pay obedience to one chief, who is ſtyled their king.

Young Carew was ſoon initiated into ſome of the arts of the wandering tribe, and with ſuch ſucceſs, that beſide ſeveral exploits in which he was a party, he himſelf had the dexterity to defraud a lady near Taunton of twenty guineas, under the pretext of diſcovering to her, by his ſkill in aſtrology, a hidden treaſure. In the mean time, his parents lamented him as one that was no more; for although they had repeatedly advertiſed his name and perſon, they could not obtain the leaſt intelligence of him. At length, however, in about a year and a half, hearing of their grief, and repeated enquiries after him, his heart relented, and he returned to his parents at Bickley. Being greatly diſguiſed both in dreſs and appearance, he was not known, at firſt, by his parents; but when he diſcovered himſelf, a ſcene followed which no words can deſcribe; and there were great rejoicings both in Bickley and the neighbouring pariſh of Cadley.

Every thing was done to render his home agreeable; but Carew had contracted ſuch a fondneſs for the ſociety of the gipſies, that after various ineffectual ſtruggles with the ſuggeſtions of filial piety, he once more eloped from his parents, and repaired to his ſwarthy connexions. Here again he commenced his career of levying contributions on the unſuſpecting and unwary, by a thouſand diſguiſes and aſſumed characters; ſuch as that of a ſhipwrecked ſeaman, a country farmer ruined by an inundation, &c. So artful were his diſguiſes of dreſs, countenance, and voice, that perſons who knew him intimately did not diſcover the deception; and once, in the ſame day, he went under three different characters, to the houſe of a reſpectable baronet, and was ſucceſsful in them all. We are content to intimate the nature of his exploits, without entering into the particulars; becauſe a minute account would be diſguſting to thoſe virtuous and well-cultivated minds, who are ſhocked even at the familiarity of a moment with ſcenes of profligacy and vice; and they have been ſufficiently detailed in the circumſtantial narrative of his 'Life and Adventures.'

The writer of that narrative, who has affected the ſtyle of Fielding's Tom Jones, has not paid any attention to dates. We find Carew, ſome time after, on a voyage to Newfoundland, from motives of mere curioſity. He acquired ſuch a knowledge of that iſland during his ſtay, as was highly uſeful to him, whenever he thought proper, afterward, to aſſume the character of the ſhipwrecked ſeaman. He returned in the ſame ſhip to Dartmouth, where he had firſt embarked, bringing with him a ſurpriſing large and ferocious dog, which he had enticed to follow him, and made as gentle as a lamb, by an art peculiar to himſelf.

At Newcaſtle, Carew aſſumed the character of mate of a collier, and eloped with a young lady, the daughter of an eminent apothecary of that town. They repaired to Dartmouth,

and, notwithſtanding he undeceived her with reſpect to the character he had aſſumed, ſhe was married to him ſoon after, at Bath. They then viſited an uncle of Carew's (a clergyman of diſtinguiſhed abilities) at Dorcheſter, who received them with great kindneſs, and endeavoured, but in vain, to perſuade him to leave the community of the gipſies.

Again aſſociating with them, his diſguiſes were more various, and his ſtratagems not leſs ſucceſsful. In ſhort, when Clauſe Patch, king of the Mendicants, died, ſuch was the high eſtimation in which Carew was held by the whole community, for the ingenuity, boldneſs, and happy termination of his ſtratagems, that he had the honour of being unanimouſly elected king, in the room of the deceaſed monarch. By his elevation to this dignity, he was provided with every thing neceſſary by the joint contributions of the community, and, conſequently, was no longer under any obligation to *go on a cruize!* Notwithſtanding this, Carew was as active in ſtratagems as ever; but royalty proved, in the ſequel, to be no protection againſt the myrmidons of the law. He was apprehended and confined as a vagrant, tried at the quarter ſeſſions at Exeter, and tranſported to Maryland. When he arrived there, he took the opportunity, while the captain of the veſſel, and a perſon who ſeemed diſpoſed to purchaſe him, were drinking ſome punch in a public-houſe, to ſlip out, and taking with him a pint of brandy and ſome biſcuits, he betook himſelf to the woods. In the ſequel, he met with incredible hardſhips; but meeting with ſome Indians, he was treated by them in the moſt friendly and hoſpitable manner, and would probably have been adopted by them; but not liking their ſociety ſo well as that of his ſubjects in England, he took the opportunity of ſeizing a canoe, and croſſing the Delaware, landed near Newcaſtle, in Pennſylvania. He ſoon after found means, by aſſuming the character of a Quaker, to reach Philadelphia, and afterward New York, whence he ſailed in a veſſel bound to England. When he approached his native ſhore in King's Road, he prevented his being preſſed on board a man of war, by pricking his hands and face, and rubbing them with bay-ſalt and gunpowder, to give him the appearance of having the ſmallpox. He then landed ſafely at Briſtol, and ſoon after rejoined his wife and begging companions.—Here terminates the narrative of the adventures of this extraordinary perſon, who, with uncommon talents, and the greateſt advantages, connections, and intereſt, might have figured in the higheſt and moſt reſpectable walks of life. What became of him afterward is unknown.

The SULTAN *and his* VIZIR; *or the* SULTAN *who received a* BLOW.

[From Miſcellanies, by William Beloe, F. S. A. 3 Vol. 12mo.]

A Certain prince, who, attended by his vizir, was accuſtomed to take the rounds of this city; met one evening, at the entrance of a bazar, a perſon of reſpectable appearance: the prince politely ſaluted him. The ſtranger, who was near the door of his houſe, returned the ſalutation, and ſaid, I intreat you, and the perſon who is with you, to enter into my houſe; be ſo kind, ſir, to accept of a hearty invitation to my ſupper. The prince and his vizir entered without heſitation. The ſtranger behaved to them with great politeneſs, and ſhewed them particular attention. A table was plenteouſly covered, and ſupper was ſoon ſerved up; it conſiſted of five hundred different diſhes: the ſtranger requeſted his gueſt to ſit and partake of his entertainment. The prince was ſtruck with the ſplendour and profuſion of the table, and obſerving that there were no perſons to

be preſent but himſelf, his vizir, and their hoſt; ſir, ſaid the ſultan, you muſt doubtleſs have invited other gueſts? No, ſaid the maſter of the houſe, I have invited none. Why then, ſaid the prince, this great profuſion of victuals? is this conſiſtent with the appearance of a perſon like you? On which the ſtranger gave the ſultan a violent blow with his fiſt; a blow bitterer than fire. Sir, ſaid he to the prince, are you obliged to eat it all? eat what you pleaſe, and leave the reſt.

The ſultan whiſpered his vizir, we are certainly in the wrong; I, by an impertinent queſtion, have provoked this man to ſtrike me, but, by Alla, if you do not find ſome means by which I may properly give him a blow for the one I have received, I will certainly put you to death. Sir, anſwered the vizir, you ſhall to-morrow night invite him to your apartments; you muſt give him an entertainment in all reſpects ſuperior to this, in ſplendour and magnificence; if he ſhall preſume to make any obſervation, you may then return the blow you have now received. The ſultan accordingly followed the advice of his miniſter, and invited the ſtranger. The next night the man entered the ſultan's apartments with a countenance and manner ſomewhat confuſed, and embarraſſed; the ſultan however encouraged him by the politeneſs and kindneſs of his behaviour: after a ſhort interval, ſupper was called for, and the table was covered with a thouſand diſhes. The ſultan ſat down, and invited his gueſt to take his place; he did ſo, and in a cool and collected manner ſaid, God's will be done; this is indeed what it ought to be; may God for ever proſper the plenty of your table; here is a profuſion of victuals, but profuſion is an excellent thing; it delights the eye before it ſatisfies the ſtomach. He feaſted heartily, and afterward exclaimed, by way of grace, praiſe be to the omnipotent god of his people.

The ſultan whiſpered his vizir, this will not do, how can I poſſibly ſtrike a man who expreſſes himſelf ſo wiſely? But if you do not find out ſome juſt cauſe, for my giving him a blow before we part, I certainly will kill you. My lord, ſaid the vizir, when he riſes from the table to waſh his hands, you ſhall officiouſly preſent yourſelf to pour out the water for him; if he ſhall ſay, by no means, ſir; God forbid that you ſhould thus demean yourſelf, indeed this muſt not be; for ſuch an impertinent oppoſition, you may certainly give him ſuch a blow as you think proper; ſaying at the ſame time, pray ſir, am I to be taught by you what I am to do? Do you preſume to contradict me? The ſultan promiſed to do ſo, and when the ſtranger roſe to waſh his hands, the prince eagerly preſſed forward, laid hold of the veſſel, and prepared to pour water on the hands of his gueſt. God bleſs you, ſir, ſaid the ſtranger, I am delighted by your kindneſs, may God proſper all your undertakings! After this exclamation, the prince was obliged to pour the water upon the ſtranger's hands, but at the ſame time it evidently appeared that he was inwardly chagrined and angry.

Coffee was now introduced, and the prince again addreſſing his vizir, ſaid, I ſwear by Alla, if you do not ſpeedily find a remedy for my diſquietude, I will order you to be put to inſtant death; is it not enough that the man has ſtruck me, but that I ſhould alſo be degraded to the ſervile office of pouring out water for him to waſh? Sir, anſwered the vizir, he will ſoon be obliged to take his leave, do you be ready with a bamboo in your hand: call one of your youngeſt ſlaves, and as the ſtranger paſſes, exerciſe your cane ſeverely upon the back of your ſlave; ſhould he then ſay, for God's ſake, ſir, and for my ſake, pardon this poor boy, and do not beat him with ſuch ſeverity: you may then return the blow, and ſay, is not this my ſlave, ſir? Is not chaſtiſement a neceſſary part of educa-

God? Do you presume to contradict me? The sultan again followed the advice of his minister, and was beating the boy when the stranger passed. The stranger, as he went along, exclaimed; sir, you do very right, beat him by all means, chastisement is a very necessary part of education; if the young man should expire in consequence, God has certainly decreed it so. Upon this, the vizir impatiently stepped forward; for heaven's sake, sir, said he to the stranger, have some compassion, and intercede for this unfortunate boy; surely you cannot be so hard-hearted. Upon this, the stranger gave a blow to the vizir ten times harder than that which he had given to the sultan. How dare you, said he, presume to interpose in a matter of this kind? Is not the boy a slave? is he not kindly educating him? The sultan burst into a hearty laugh; now, said he, I forgive you both, as my vizir has fared no better than myself.

Curious PARTICULARS *of the* ZOOLOGY *of the* Isle *of* Wight: *From the History of that Island, by the Rev.* Richard Warner.

'But ask now the beasts, and they shall teach thee; and the fowls of the air, and they shall tell thee:

Or speak to the earth, and it shall teach thee; and the fishes of the sea shall declare unto thee.

Who knoweth not in all these, that the hand of the Lord hath wrought this?'

We have hitherto considered the magnificent exhibitions of nature in the Isle of Wight: we shall now descend to her more minute but not less interesting operations. In the contemplation of caverns, rocks, and mountains, the mind is rather awed into astonishment than softened into delight: we there behold the agency of a being of infinite power and majesty, at whose presence the 'earth shakes, the heavens drop, and the waters are afraid;' but in surveying the economy of the animal and vegetable kingdoms; the exquisite mechanism with which their individuals are formed; the unerring instincts with which they are endued; and the nice adaptation of their several parts to answer the purposes for which they were created; we acknowledge the finger of a God, wise and benevolent, as he is great and powerful; who is 'good to all the creatures of his hand; and whose tender mercies are over all his works.'

The *fauna vectensis* does not add much to the zoology of Hampshire. It is indeed marked by some singular omissions in the chain of quadrupeds common in every other part of England. The fox, who has for ages been the terror of the farmer, and the delight of the sportsman throughout Britain, was never yet found in the Isle of Wight. The harmless badger also, and the fetid fitches, or polecat, are strangers to this district; which, from the absence of these animals, and its insular situation, appears to be the best calculated for the production of game of any place in Great Britain. And indeed it has always been famous for its hares, pheasants, and partridges.

The hare of the Isle of Wight furnishes good and constant sport to the hunter during the season. It is, I think, rather smaller than its brethren on the continent, but swift and strong. The inequalities of the island make this spot an excellent residence for the animal, and give it considerable advantages over its pursuers. The long muscular hind legs which it has, are well calculated to mount the steep downs of the island with uncommon fleetness; and it not unfrequently escapes, by distancing both hunters and dogs, at these rapid ascents.

As the hare is an animal of ſurpriſing fecundity, and ſecured from the attacks of the fox, and polecat, by the abſence of theſe deſtructive vermin in this part, we may naturally ſuppoſe they would be found in very great plenty throughout the iſland. And indeed this was the caſe till within theſe thirty or forty years; but as a Roman taſte for theſe animals has ariſen among us, and they are conſidered as tit-bits by modern epicuriſm, the midnight poacher finds it well worth while to employ all his ſkill, and run every riſk, in the capture of the hare; a practice which of courſe muſt thin the breed extremely. There remain, however, ſufficient for the ſport of the gentlemen of the iſland.

There are few diſagreeable reptiles in the iſland. Such as occur, are found in the lower, ſandy parts of it; the other ſpots being freed from them by the elevation and expoſure of their ſituation. Many vipers indeed are met with in the chalky and ſtony places, and the largeſt I ever ſaw, I had nearly trodden upon, in the pariſh of Wootton, in the outſkirts of Coombly wood, in Auguſt, 1792. Had my foot, however, come in contact with this animal, no injury could have enſued to me from the preſſure, as it was utterly incapable of revenging the inſult. This incapacity had been produced by its voraciouſneſs, as was evident on an examination of the reptile. We then found that it had attempted to gorge a frog, (at leaſt three times as large in circumference as the thickeſt part of its own body) but being unable to accompliſh the taſk entirely, one of the legs and thighs of its prey continued to depend from the viper's mouth, and effectually prevented it from c oſing the jaws and excluding its poiſon. The animal indeed (as is the caſe with all the ſerpent kind after ſatisfying their voracity) was in a ſtate of torpor, which rendered it apparently inſenſible of our approach or obſervation, and unable to expreſs any tokens of indignation when we deſtroyed it. On meaſuring it when dead, it was found to be exactly twenty-nine inches long.

On contemplating this animal, one of the moſt remarkable circumſtances relating to it, appears to be the faculty it thus poſſeſſes, of extending its jaws, throat, and ſtomach ſo conſiderably, as to render them capable of admitting a ſubſtance much thicker than any part of its body. By the ſingular conformation of its parts, to accompliſh this purpoſe, the wiſdom of Providence ſtrikingly manifeſts itſelf. The head of the viper is broad and flat, having a wide mouth of very uncommon and diſproportionate magnitude. This permits the jaws to gape to a great extent; but the aperture would ſtill be inſufficient for the admiſſion of the animal's prey, were not the capability of its diſtention increaſed by the following nice contrivance. The jaws are not united together at the bottom, as in the human mouth, by a proceſs reſembling a pair of hinges; but connected by a ſtrong muſcle, the elaſticity of which is ſuch, as to keep the features firm when not in action, and to allow their being ſtretched to an immoderate extent, when the ſize or form of the animal's food requires it. The gullet, or throat receives the aliment from the mouth, and being very capacious and elaſtic, eaſily accommodates itſelf to the magnitude and figure of it. From hence a part only immediately finds its way into the ſtomach, a receptacle by no means ſo large as the gullet; here it continues till it be reduced by the action of digeſtion into chyle, which going off in the natural way, affords room for the remaining parts to be abſorbed by the ſtomach, and digeſted.

Theſe reptiles are viviparous, but fortunately for mankind not very proliſic. The poiſon of their bite is fully eſtabliſhed; and the effects of it, if there be no ſpeedy application to the wound, extremely frightful, and many times fatal. The ſimpleſt and moſt ready cure, in caſe of an injury from

ſtriper, is a brisk fomentation of the wounded limb with warmed ſallad oil; and taking about a gill of the ſame liquid internally.

The only inſect of any curioſity, which my occaſional walks through the iſland have given me an opportunity of diſcovering, is the *gryllus talpa*, or mole-cricket. The character and manners of this little creature, which is perfectly inoffenſive, are well deſerving notice, particularly as its homely, and indeed hideous figure, are apt to excite emotions of dread and abhorrence, neither of which need be entertained againſt it. The only one I have ſeen in this part of Hampſhire occurred in a wet meadow in the heart of the iſland. It had been dug up by a lad who was grouting for earth-worms; and had filled him with aſtoniſhment and apprehenſion. The ſpade was juſt lifted for dividing the harmleſs inſect in twain, when my preſence and intreaty prevented the meditated blow. On examining this inſect, it appeared to be of a very dark brown colour, and little more than two inches in length. Its body was ſcaly; furniſhed with two long, pointed wings, and as many hairy tails. The moſt remarkable parts about it, however, were the fore-feet, which have ſome reſemblance to a human hand, and are admirably formed for making thoſe ſubterraneous excavations wherein the animal reſides, and depoſits its eggs. Strong, webbed, and a little incurvated, the mole-cricket works with its paws at a prodigious rate, and will burrow its way through a whole ridge of leguminous plants, (of the roots of which it is very fond) in the courſe of a ſingle night. With theſe inſtruments, alſo, its neat habitation (which is a room about the ſize of a hen's egg) is quickly formed, and guarded with various winding paſſages, and curious approaches to it. This domicilium is generally, in the ſummer time, placed within ſix inches of the ſurface of the ground, and herein the female lays her eggs, from one hundred to one hundred and fifty; but toward winter, inſtinct, ever faithful to its office, informs the little being that in order to ſecure his tender offſpring he muſt get deeper into the ſoil, and retire from the influence of the froſt. Again therefore he ſets to work, and in a ſhort time completes with his little webbed feet, a commodious hybernaculum, about fourteen inches below the ſurface of the ground. Hither he retires with his family, and patiently waits for the return of genial ſuns, and warmer ſeaſons, when he again takes poſſeſſion of his ſummer abode.

The chief food of the mole-cricket conſiſts of roots and vegetables, for which he ſometimes travels at night, by the aſſiſtance of his wings, to a conſiderable diſtance. Before morning he generally returns to his ſubterraneous habitation, and, wonderful to tell! is found (by the minute inveſtigations of naturaliſts and anatomiſts) to be employed there during the day chiefly in ruminating, or chewing the cud.

The fiſh found on the coaſt of the iſland are chiefly ſuch as frequent the ſouthern ſhores of Britain. Now and then, indeed, theſe innoxious tribes are diſturbed by the ſhark, who is either brought from the Baltic, or the tropics. In theſe caſes he comes,

> Lur'd by the ſcent
> Of ſteaming crowds, of rank diſeaſe, and death,

following veſſels, the crews of which are unhealthy, and afford him luxurious meals by their occaſional diſſolution. Sharks have been ſhot in the ſtrait that ſeparates the iſland from the oppoſite ſhore, and been ſeen even within the harbour of Cowes. They make, however, but a ſhort ſtay in this neighbourhood; and either return to the regions from whence they came, or go more to the weſtward, in ſearch of the droves of pilchards on the Corniſh coaſt.

The *porpeſs* alſo is perpetually ſeen on the coaſts of the iſland, 'tempeſting the deep' with its unwieldy gam-

bols. It is a very disgusting fish to the eye, being almost black in colour, with a head like a hog, and from three to six feet in length.

During the whiting and herring season, it is very amusing to watch these animals in pursuit of their food, which is composed of the smaller fish; and to remark the various arts by which they accomplish the great end of satisfying their voracity. An excellent naturalist compares their exertions, at this time, to those of a pack of hounds after a fox; and indeed there is a great resemblance in the operations of both. Their eagerness also, when thus engaged, equals that of the dog, and frequently renders the porpesse so blind to its safety, that he will dash headlong upon shoals from which he never can recede, rather than give up the pursuit. It is either by an accident of this nature, or by an injury or indisposition which prevents him keeping the seas, that the porpesse is now and then forced on our shores, and found either dead or expiring. When this happens, the carcase proves to be no contemptible treasure to the finder; for the quantity of fat with which the flesh is surrounded, being well boiled, is converted into a very excellent and valuable oil. The lean also of this fish is in some parts of the world used for the table; but proves, to a palate not habituated to it, a very rank and disagreeable viand.

The mutations of fashions and tastes, however, in the line of eating, have been not a little whimsical, even in our own country; since the porpesse, which we now turn from with loathing and abhorrence, was eaten with avidity by the old English epicure. Ancient cookery exhausted all its art in mixing sauces for this delectable morceau; and there was no entertainment of any magnificence till the sixteenth century, at which the porpesse, either bodily or in junks, did not find a respectable place.

There is another fish of a curious form and singular history, which is often fished up by the dredgers on the island shores. This is the *bligs*, or great cuttle fish, whose bones are the well known white, oval substances, found on the beach in many parts of the island. This aquatic animal, which the naturalists place in the *vermes* class, exhibits a very hideous and deformed appearance. It is from eighteen inches to two feet in length, and covered with a thin dark coloured skin. To the eye it seems to be of the consistence of jelly; strengthened, consolidated, and defended as it were by a bone on the upper part of the back. For the convenience of feeding itself, it possesses eight arms, placed with great regularity round its mouth, each of which is thickly set with a multitude of small concave discs, that enable it to adhere, with inconceivable tenacity, to rocks or stones when it chuses to be quiescent. Exclusive of these arms it has two *tentacula*, or feelers, of considerable length, which it is able to extend or contract at pleasure. With these it seizes upon the small fry that compose its food, which having entangled, they immediately commit the prey to the management of the eight arms, while themselves are again extended in search of further plunder. The eyes are seated immediately beneath the *tentacula*; and a little below them is discovered a curious mouth, which in shape and substance nearly resembles the beak of a parrot.

As this fish is formed without any external weapons of defence, and by no means made for contest or exertion, it would fare but ill amid the dangers of the deep, and the numerous enemies that surround it, had not Providence wisely afforded it a means of safety, which enables it to escape mischance, and continue the propagation of its kind. This arises from a secretion of a black fluid, nearly resembling the best ink, contained in a bladder under the belly of the fish. No sooner does the animal perceive himself to be in danger, from the pursuit of an enemy which he can neither outswim nor contend with, than he emits (by the

same) a certain portion of his dingy liquor; this immediately discolours the circumambient waters, and precludes the purſuer from ſeeing his deſtined prey, which, wrapped in impenetrable darkneſs, quickly ſinks to the bottom, and there remains till the danger be overpaſt.

Theſe remarkable means of ſelf-preſervation did not elude the obſervation of the ancient naturaliſts, who all make mention of them; and particularly Oppian, in the following pretty manner:

'Th' endanger'd cuttle thus evades his feare,
And native hoards of fluid ſafety bears.
A pitchy ink peculiar glands ſupply,
Whoſe ſhades the ſharpeſt beams of light defy:
Purſu'd, he bids the fable fountains flow,
And wrapt in clouds eludes th' impending foe.
The fiſh retreats unſeen, while ſelf-born night,
With pious ſhade befriends her parent's flight.'

The *launce*, *ammodytes*, or ſand-eel, is a delicate little fiſh, found on the ſandy ſhores of the iſland. It being both a good bait for other ſpecies, and excellent eating in itſelf, the fiſhermen take ſome trouble in procuring them. At the receſs of the tide, they are to be found about fourteen inches below the ſurface, and are eaſily turned up by a light ſpade, or tridented fork. The iſlanders call them the ſand ſprat, from the place of their reſidence; into which they bore with great dexterity and diſpatch.

Here alſo is found the *ſiliqua*, a ſpecies of the *ſolen*, or razor; ſo called from the exact reſemblance of its ſhell to the haft of that inſtrument. I believe the iſlanders are unacquainted with the excellence of this fiſh; ſince did not find they ever made a practice of taking them, although it is evident they are ſufficiently plentiful, on the ſandy parts of the coaſt, from the numbers of caſt ſhells which occur, and the holes of their habitations viſible at low water.

The ſlender form of this ſhell enables its inhabitant to ſink it eaſily into the ſand, which it does in a perpendicular direction, to the depth of nearly two feet. When the fiſh requires food, it aſcends from this dark retreat, and diſcovers one end of the ſhell a few inches above the ſurface of the ſand; from this the body is ſeen to be protruded, and actively employed in the ſearch of ſuch minute inſects as conſtitute its prey.

The *ſiliqua* is only to be caught at the receſs of the tide; and ſo vigilant is it in providing for its own ſafety, that it requires great circumſpection to ſurpriſe it even then. In this caſe, the fiſherman takes ſome ſalt, and places a ſmall quantity of it round the perforation in the ſand wherein the fiſh reſides. This quickly melting, penetrates to the *ſiliqua*, who is led from thence to believe the tide is riſen, and accordingly elevates himſelf to the ſurface to ſeek for food. A moment, however, convinces it of the deceit, and if the fiſherman be not extremely active, his deſtined prey eſcapes him, by ſinking inſtantaneouſly into its dark and deep retreat, from whence it is not a ſecond time to be allured.

The *mytilus edulis*, or eatable muſcle, is found in many parts of the iſland ſhores, but appears not to be regarded much, from the opinion of its poſſeſſing ſome noxious, nay poiſonous qualities. The idea, however, is ſlanderous and without foundation, as the fiſh itſelf is a wholeſome and nutritious food. What occaſions the diſagreeable effects ſometimes experienced after eating muſcles, is ſwallowing inadvertently the little maſs of hair or ſilky web, found in the middle of the fiſh, with which it attaches itſelf when alive to rocks and ſtones. This is very pernicious and highly indigeſtible, producing that ſickneſs, ſwelling, &c. which raw ſilk, cobwebs, or any thing of the ſame

nature, is found, if ſwallowed, to occaſion *.

On opening the muſcle, there is generally diſcovered a ſmall crab, called the *piſum*, or pea-crab, who ſeems to be the voluntary inhabitant of this bivalve. The ancients fancifully imagined, that this minute inſect was purpoſely placed in the ſhell of the muſcle, and other fiſh of the ſame claſs, to aſſiſt, by its ſagacity, the ſtupidity of its hoſt, in acquiring food and avoiding danger. When the friendly pair feel inclined to eat, the muſcle opens its ſhells, and permits the little lodger to travel forth in queſt of provender. As ſoon as he has procured a ſupply, he returns to the ſluggiſh muſcle, enters the ſhell, and divides the plunder with him. But ſhould he, on going out, perceive any of the *polypus* race, (the ſworn enemies of the mytilus tribe), in the neighbourhood, he inſtantly hurries to his teſtaceous home, communicates the alarm, and all danger is immediately prevented by the muſcle firmly cloſing his impenetrable ſhells.

All the ſubmarine rocks and ſtones on the coaſt of the iſland afford protection to the *patella vulgata*, or common limpet; and to theſe this fiſh attaches itſelf with the moſt obſtinate adheſion. The difficulty of ſeparation indeed is ſuch, that the fiſhermen are deterred from attempting to collect limpets for ſale; though ſuch as have patience ſufficient to diſengage them from the places to which they are affixed, are rewarded for their trouble by an extremely good and nouriſhing viand.

Various ſpecies of turbinated ſhells, chiefly of the *buccinum* or *welk* kind, are picked up on theſe ſhores. As the natural inhabitants of theſe affect the deep receſſes of the ocean, the ſhells are never found with their original poſſeſſors alive. It frequently happens, however, that on taking them up they appear to be tenanted by a kind of crab; the claws and legs of which diſcover themſelves at the mouth or opening of the ſhell. This lodger is called the *bernard*, or hermit-crab, and curiouſly exhibits the wonderful operations of animal inſtinct. As the hinder parts of the hermit's body are tender and naked, unprotected by that ſhelly covering which its cruſtaceous brethren poſſeſs, perpetual injuries would happen to it, had not nature provided it with a foreſight which ſerves to guard it from external accident. Taught by this, the hermit-crab ſeeks for the roomy cavity of ſome forſaken welk, into which it wriggles itſelf, and there continues till its increaſed ſize obliges it to look out for a habitation of greater dimenſions. It then leaves its temporary protector, and traverſes the coaſt with patient aſſiduity in ſearch of another abode, to which when found it attaches itſelf, as to the former one, by means of a ſtrong hook placed at the extremity of its tail. So kindly has Providence beſtowed even on the moſt minute and contemptible animals, the means of comfort and ſelf-preſervation!

The ſouthern ſhore of the iſland abounds with cruſtaceous fiſh of all ſorts. The lobſter and crab in particular are found in great plenty, and of uncommon ſize and excellence. Of the former, I have ſeen an individual that weighed ſix pounds and a half; and I am informed the latter will arrive to an equal magnitude. The plentiful production of this fiſh on a particular part of the ſhore, at the back of the iſland, has occaſioned a neighbouring village to be called Crab-naton.

* The ſingular conformation of the organs of this marine animal is ſaid to be this: it has a mouth furniſhed with two fleſhy lips; its inteſtine begins at the bottom of the mouth, paſſes through the brain, and makes a number of circumvolutions through the liver; on leaving this organ it goes on ſtraight into the heart, which it penetrates, and ends in the anus; near which the lungs are placed, and through which it breathes! —Goldſmith's Animated Nature, vol. vii. page 42.

New and curious PARTICULARS *of the* CUSTOMS *and* MANNERS *of the* Chineſe *.

The following Account is contained in a Supplementary Chapter to Mr. Anderſon's *Narrative; it being written by Captain* Mackintoſh, *of the* Hindooſtan *Eaſt Indiaman, who at the Period of the Embaſſy, was employed in its Service, in a different Part of the Country.*

TO give an accurate deſcription of the marriage ceremony in China, is to do little more than to reply to the abbé Groſier, whoſe account of the Chineſe nuptials, as well as many other of their cuſtoms, is, altogether, erroneous. The abbé ſays, 'On the day appointed for the ceremony, the bride is firſt placed in an encloſed chair, or palanquin, when all the articles that compoſe her portion are borne before and behind her by different perſons of both ſexes, while others ſurround her, carrying flambeaux, even in the middle of the day.' The marriage ceremony, which I ſaw at Macao, had little in common with this deſcription, but the palanquin. The bride, ſeated in that machine, was preceded by muſic, and enſigns of various colours were borne by men both before and in the rear of the proceſſion, which conſiſted principally of the relatives of the bride and bridegroom, who eſcort her to the houſe of her huſband, where a feaſt is prepared, and the day is paſſed in mirth and feſtivity. Nor is the evening concluded with thoſe abſurd ceremonies, with which the abbé Groſier, and other authors, have ridiculouſly encumbered the conſummation of a Chineſe wedding.

The idea which he and others have propagated of the rigid confinement of the Chineſe women, is equally void of truth. In different parts of that extenſive country, different cuſtoms may prevail; and the power of huſbands over their wives may be ſuch as to render them maſters of their liberty, which they may exerciſe, with ſeverity, if circumſtances ſhould, at any time, ſuggeſt the neceſſity of ſuch a meaſure, or caprice fancy it: but I do not heſitate to aſſert, that women, in general, have a reaſonable liberty in China; and that there is the ſame communication and ſocial intercourſe with women, which, in Europe, is conſidered as a principal charm of ſocial life.

The abbé has alſo aſſerted, with equal ignorance of the country, whoſe hiſtorian he pretends to be, that maſters are deſirous of promoting marriage among their ſlaves, in order to increaſe the number of them, as the children are born to inherit the lot of their parents. This is a mere fable, as there are no ſuch claſs of people as ſlaves in the Chineſe empire. They cannot import ſlaves in their own veſſels, which are never employed but in their domeſtic commerce; and he muſt be afflicted with the moſt credulous ignorance, who believes that they import them in foreign bottoms. If, therefore, there are any ſlaves in China, they muſt be natives of the country; and among them, it is well known, that there is no claſs of people who are in that degrading ſituation.

Certain claſſes of criminals are puniſhed with ſervitude for a ſtated period, or for life, according to the nature of their offences; and they are employed in the more laborious parts of public works. But if this is ſlavery, the unhappy convicts, who heave ballaſt on the Thames, are ſlaves. There is a cuſtom, indeed, in China, reſpecting this claſs of criminals, that does not prevail in England, which is, their been hired for any ſervice they

* See our Magazine for April, page 276.

are capable of performing: and this frequently happens, as theſe convicts may be had at a cheaper rate than ordinary labourers. This regulation, however, has one good effect, that it exonerates government from the expenſe of maintaining ſuch unhappy perſons without leſſening the rigour or diſgrace of the puniſhment. But I re-aſſert that ſlavery, by which I mean the power which one man obtains over another, by purchaſe, or inheritance, as in our Weſt India iſlands, is not known in China. Indeed, ſome of the Chineſe in the interior parts of the country, were, with difficulty, made to comprehend the nature of ſuch a character as a ſlave; and when I illuſtrated the matter, by explaining the ſituation of a negro boy, called Benjamin, whom ſir George Staunton had purchaſed at Batavia, they expreſſed the ſtrongeſt marks of diſguſt and abhorrence. This converſation took place at Jehol, in Tartary. But at Canton, where the communication with Europeans gives the merchants a knowledge of what is paſſing in our quarter of the globe, poor Benjamin was the cauſe of ſome obſervations on his condition, that aſtoniſhed me when I heard, and will, I believe, ſurpriſe the reader when he peruſes them. The boy being in a ſhop with me in the ſuburbs of Canton, ſome people who had never before ſeen a black, were very curious in making inquiries concerning him; when the merchant, to whom the warehouſe belonged, expreſſed his ſurpriſe, in broken Engliſh, that the Britiſh nation ſhould ſuffer a traffic ſo diſgraceful to that humanity which they were ſo ready to profeſs: and on my informing him that our parliament intended to aboliſh it, he ſurpriſed me with the following extraordinary anſwer, which I give in his own words:—'Aye, aye, black man, in Engliſh country, have got one firſt chop, good mandarin Willforce, that have done much good for allau blackie man, much long time: allau man makie chin, chin hee, becauſe he have got more firſt chop tink, than much Engliſh merchant-men; becauſe he merchant-man tinkee for catch money, no tinkee for poor blackie man: Joſh, no like ſo faſhion.' The meaning of theſe expreſſions is as follows: 'Aye, in England, the black men have got an advocate and friend, (Mr. Wilberforce) who has, for a conſiderable time, been doing them ſervice; and all good people, as well as the blacks, adore the character of a gentleman, whoſe thoughts have been directed to meliorate the condition of thoſe men; and not like our Weſt India planters, or merchants, who, for the love of gain, would prolong the miſery of ſo large a portion of his fellow-creatures as the African ſlaves. But God cannot approve of ſuch a practice.'

That ſome general knowledge of the politics of Europe may be obtained by the mandarins and merchants in the port of Canton, might be naturally expected, from their continual communication with the natives of almoſt every European country; and as many of them underſtand the European languages, they may, perhaps, ſometimes read the Gazettes that are publiſhed in our quarter of the globe. But that the queſtion of the ſlave trade, as agitated in the Britiſh parliament, ſhould be known in the ſuburbs of Canton, may ſurpriſe ſome of my readers as it aſtoniſhed me. Nor will it be unpleaſing to Mr. Wilberforce to be informed, that, for the active zeal which he diſplayed in behalf of the nations of Africa, in the ſenate of the firſt city of Europe, he ſhould receive the eulogium of a Chineſe merchant beneath the walls of an Aſiatic city.

There are frequent feſtivals in China, and we ſaw at Macao, the principal of them which celebrates the beginning of the New-year. According to the Chineſe calendar, it commences on the ſecond day of our month of February, and is obſerved with great joy and gladneſs throughout the whole empire, and by an entire ſuſpenſion of all buſineſs. Of any religious ceremonies that uſher in the

dawn of the year, I cannot ſpeak, as all the diſtinctions of the ſeaſon which appeared to us, conſiſted of feaſting by day, and fireworks by night. This feſtival is prolonged, by thoſe who can afford it, for ſeveral days: and they, whoſe circumſtances confine their joy to one day, take ſo much of it, that they generally feel its effects on the next.

Of the manner in which they keep or obſerve their ordinary holidays, I ſhall give the following account:

In the firſt place they purchaſe proviſions according to their ſituation and capacity, which are dreſſed, and placed before a ſmall idol, fixed on an altar, with a curtain before it: and ſuch an altar, in ſome form or other, every Chineſe has in his habitation, whether it be on the land, or on the water, in a houſe, or a junk. This repaſt, with bread and fruit, and three ſmall cups of wine, ſpirits, and vinegar, are, after a threefold obeiſance from the people of the houſe to the idol, carried to the front of their dwelling: there they kneel and pray, with great fervour, for ſeveral minutes; and after frequently beating their heads on the ground, they riſe, and throw the contents of the three cups to the right and left of them. They then take a bundle of ſmall pieces of gilt paper, which they ſet on fire, and hold over the meat. That is ſucceeded by ſtrings of ſmall crackers, hanging to the end of a cane, which are lighted and made to crack over the meat. The repaſt is then placed before the idol, or Joſh, as it is called, (a term which means a deity) and after a repetition of obeiſances, they conclude with a joyous dinner, exhilarated by plenty of ſpirits, which are always boiled in ſmall pewter or copper veſſels before they are taken.

On the 1ſt of March it is uſual, according to ancient cuſtom, for dramatic pieces to be performed on ſtages in the principal ſtreet of the different towns throughout the empire, for the amuſement of the poor people, who are not able to purchaſe thoſe pleaſures. This beneficent act continues for a ſucceſſion of ſeveral days, at the expence of the emperor; ſo that every morning and evening, during this period, the lower claſſes of his ſubjects enjoy a favourite pleaſure without coſt, and bleſs the hand that beſtows it on them.

Of the knowledge of medicine among the Chineſe I can ſay no more, than that I was witneſs, in one inſtance, to a ſkilful application of it, in the caſe of John Stewart, a ſervant of captain Mackintoſh, who, on our return from Jehol, had been ſeized with the dyſentery, which increaſed ſo much on the road, that at Waun-choyeng, there were no hopes entertained of his being able to leave that place. Whether it aroſe from the deſire of the patient, or was ſuggeſted by any perſon in the ſuite, I know not, but a Chineſe phyſician was called to his aſſiſtance; when the man's caſe was explained to him by Mr. Plumb, in the preſence of ſir George Staunton. The phyſician remained a conſiderable time with his patient, and ſent him a medicine, which removed the complaint, and reſtored him to health.

The people are, in general, of an healthy appearance: it is very rare, indeed, to ſee perſons marked with the ſmallpox; and, except in the ſeaports of Macao and Canton, ſeveral of the diſorders unfortunately ſo frequent in Europe, are not known in China.

The caxee is the only current coin in China: any other ſpecies of money is abſolutely forbidden, and is made of a white metal of about the ſize of our farthing, with a ſmall ſquare hole driven through the middle, for the purpoſe of running them on a ſtring to be compoſed into candereens and maces: but although the term candereen and mace are employed to certify a certain quantity of caxees, there are no coins in the country which bear that ſpecific value; ſo that, in fact, they are only imaginary denominations, like our pounds, &c.

The comparative eſtimation of the caxee with Britiſh money cannot be aſcertained with any degree of accu-

racy, as it bears no ſterling value even in that country; every province having its particular caxee, which is not current in any other. In the province of Pekin a Spaniſh dollar will produce, in exchange, from five hundred to five hundred and eighty caxees, according to the weight of the dollar, which the Chineſe prove by a ſmall ſteel-yard like ours in England; though they ſometimes employ ſcales. In the province of Hoang-tchew the dollar obtains from ſeven hundred to ſeven hundred and fifty caxees; in other places it will find a ſtill more various exchange.

I cannot conclude, without paying a tribute of reſpectful veneration to the great and illuſtrious, the wiſe and beneficent ſovereign of China; who, in a long reign of near ſixty years, has, by the general voice of his people, never ceaſed to watch over and increaſe their happineſs and proſperity. Of the manner in which he adminiſters juſtice, and gives protection to the meaneſt of his ſubjects, the following anecdote, which I heard frequently in the country, is an affecting example:

A merchant of the city of Nankin had, with equal induſtry and integrity, acquired a conſiderable fortune, which awakened the rapacious ſpirit of the viceroy of that province: on the pretence, therefore, of its being too rapidly accumulated, he gave ſome intimations of his deſign to make a ſeiſure of it. The merchant, who had a numerous family, hoped to baffle the oppreſſive avarice that menaced him, by dividing his poſſeſſions among his children, and depending upon them for ſupport.

But the ſpirit of injuſtice, when ſtrengthened by power, is not eaſily thwarted in its deſigns; the viceroy, therefore, ſent the children to the army, ſeized on their property, and left the father to beg his bread. His tears and humble petitions were fruitleſs; the tyrannical officers, this vile vicegerent of a beneficent ſovereign, diſdained to beſtow the ſmalleſt relief on the man he had reduced to ruin; ſo that, exaſperated by the oppreſſion of the miniſter, the merchant, at length, determined to throw himſelf at the feet of the ſovereign, to obtain redreſs, or die in his preſence.

With this deſign he begged his way to Pekin; and, having ſurmounted all the difficulties of a long and painful journey, he at length arrived at the imperial reſidence; and, having prepared a petition that contained a faithful ſtatement of his injuries, he waited with patience in an outer court till the emperor ſhould paſs to attend the council. But the poverty of his appearance had almoſt fruſtrated his hopes; and the attendant mandarins were about to chaſtiſe his intruſion, when the attention of the emperor was attracted by the buſtle which the poor man's reſiſtance occaſioned: at this moment he held forth a paper, which his imperial majeſty ordered to be brought to his palanquin; and, having peruſed its contents, commanded the petitioner to follow him.

It ſo happened, that the viceroy of Nankin was attending his annual duty in the council: the emperor, therefore, charged him with the crime ſtated in the poor man's petition, and commanded him to make his defence: but, conſcious of his guilt, and amazed at the unexpected diſcovery, his agitations, his looks, and his ſilence, condemned him. The emperor then addreſſed the aſſembled council on the ſubject of the viceroy's crime, and concluded his harangue with ordering the head of his tyrannical officer to be inſtantly brought him on the point of a ſabre. The command was obeyed; and while the poor old man was wondering on his knees at the extraordinary event of the moment, the emperor addreſſed him in the following manner: look, ſaid he, on the awful bleeding example before you, and as I now appoint you his ſucceſſor, and name you viceroy of the province of Nankin, let his fate inſtruct you to fulfil the duties of your high and important office with juſtice and moderation.

DESULTORY THOUGHTS *on the* BLAME *of* CELIBACY.

THE prevalence of celibacy, a ſtate not uſually ſuppoſed to be very honourable, has occaſioned an important queſtion to be agitated; 'To which of the ſexes is celibacy chiefly owing?' Until this queſtion can be reſolved, it is in vain to ſeek for a remedy, but that it will ſoon be brought to a determination is not very probable, from this unfortunate circumſtance, that the parties moſt capable of giving information on the ſubject, content themſelves with throwing the blame on each other, inſtead of furniſhing us with any principles or arguments from which we may be able to form an opinion. The maids ſay, that the bachelors are in fault, and the bachelors ſay, that the maids are in fault; and there the matter lies, and is likely to remain.

There is one fact, indeed, which at firſt ſight, would appear to explain this diſpute entirely in favour of the female ſex; and this is a cuſtom which ſeems to have prevailed, time immemorial, in all civilized and (if I miſtake not) uncivilized nations in the world, namely, that the man ſhall be the *ſoliciting* party and the woman the *ſolicited*; conſequently, it is at all times in the power of the bachelor to *attempt* to improve his ſituation, but the woman has at no time any ſuch opportunity. The blame, in this view of the matter, would ſeem to reſt entirely with the bachelor, if he had not contrived very ingeniouſly to get rid of the burden, in a great meaſure, by retorting, that though men have the power of aſking, women have the caprice of refuſing; and, that thoſe who have *never* been aſked may be fairly preſumed to be unworthy of the honour. Theſe arguments, we ſee, run into each other ſo complexly, that it will be better to leave the queſtion undetermined as it is, than to attempt a ſolution from ſuch confuſed and imperfect documents.

Were I diſpoſed to determine the queſtion, as a matter of private opinion, and which, of courſe, I could not pretend to offer as a deciſion upon proof, I ſhould be inclined to think that the fault lay principally with our ſex. For, whatever objections may be made to the manners and conduct of the female ſex, either in general, or only in particular inſtances, the ſame reaſons ought to prevail why *we* ſhould be rejected, as why *they* ought not to be ſolicited. There are, I will grant, many very material objections to the mode in which young ladies are educated at preſent: it is a mode, I am afraid, not well calculated to make faithful wives, tender mothers, or agreeable companions. But I hope the world is not ſo very completely turned upſide down, as that the ſingle gentlemen arrogate to themſelves virtues which are no longer to be found in the female ſex, and that the uſual newſpaper compliment—'poſſeſſed of every qualification to render the marriage ſtate happy,' is to be taken from the bride, and beſtowed upon the bridegroom. If ſo, we muſt go on altering all the phraſes uſual at that period, and inſtead of complimenting him as the *happy man*, ſend all our congratulations to the other party. But I cannot yet be brought to think, that our ſex have made ſuch rapid advances in virtue and chaſtity, as to be ſuperior to the other; and I have little doubt, that no man can be at a loſs for a wife worthy of him, who is ſerious in his endeavours to find out one that will ſuit this character.

Being, therefore, of opinion, that the blame, in a great meaſure, reſts with the male ſex, it may be worth while to enquire into ſome of thoſe reaſons which prevent their entering into a ſtate againſt which they have no natural, or ſerious diſlike. The firſt of theſe I take to be, their expecting more from marriage than marriage can afford; their imagining it to be a ſtate of ſuperior and uninterrupted happineſs; and their waſting

time, conſequently, in looking round the world for a woman likely to beſtow this felicity that is to know no end. Whoever entertains theſe ideas of marriage, will be ſure to ſuffer diſappointment: for the happineſs of the married ſtate is a mere chimera, if it is to depend on one of the parties only: the union of a brute and an angel would be as likely to produce happineſs. The deſire and ability to pleaſe muſt be mutual; and then there is as much *chance* of happineſs as can be expected in the lot of frail mortality.

Beſides, the notion that marriage, at its beſt, is a ſtate of ſuperior and uninterrupted happineſs, is abſolutely falſe; and I believe it never would have entered into any man's head, had it not formed the concluſion of all novels and romances, whence, by degrees, it crept into our converſations, and has been adopted as an opinion, and that more ſeriouſly than many are willing to allow. The chief happineſs of the married ſtate appears to conſiſt in a conſcientious, tender, and affectionate diſcharge of the duties annexed to it; but, whoever entertains a juſt ſenſe of theſe, needs not to be told that the fears, alarms, and anxieties of the ſtate are frequently more than adequate to any felicity it affords. How often are the common calamities of human life, thoſe to which all are ſubject who feel and think, aggravated in the married ſtate by perverſeneſs of temper, and by filial ingratitude! There are, therefore, evils incident to both ſtates. The queſtion is, in which is the greateſt portion of happineſs to be found; and this may be very eaſily anſwered if we are candid with ourſelves, and conſider that he who is unhappy in the married ſtate was not very happy in the ſingle, and that there can be no ſtate in this life exempt from a dependence on temper and diſpoſition which conſtitute, if not the happineſs, at leaſt all the comforts of life.

Another proof of our candour and good ſenſe will be given, if we do not expect to find in *another*, that perfection which we are conſcious is to be found no where. Let us conſider, that it is a mortal and not an angel, a frail fellow-creature and not a divinity, with whom we unite ourſelves. This is a conſideration which will be very ſtrikingly illuſtrated *after* marriage; but it were far better to take it into the account before. We ſhall, in that caſe, eſcape the chagrin of diſappointment, and not bring into queſtion our knowledge of human nature.

Senex, an old acquaintance of mine, has been advancing arguments againſt matrimony for the laſt thirty years of his life, and, beſide his confirmed averſion to the ſtate, may be now reckoned paſt all danger of temptation to violate his vow of celibacy. His leading topic is the *management* of a wife; which he thinks has been moſt ſhamefully neglected by huſbands in general, but which would form a principal object with him, if he ever had, or ſhould now enter into the holy ſtate. This notion of *management* is rather a confuſed one; but as far as I have been able to underſtand it from repeated converſations with Senex, would, I apprehend, not agree ſo well with Britiſh females, as with ſavage Indians, and would be more becoming on the ſhores of lake Ontario than on the banks of the Thames. Senex, however, is continually upbraiding his married acquaintances with their puſillanimity, and often exclaims with major Oakly in the play, 'What a pity is it that nobody can manage a wife but a bachelor.'

Senex had not originally a diſlike to matrimony; few young men, perhaps, have, but he always contrived to meet with ſo many inſurmountable obſtacles, that he never could effect an union adequate to his inclinations. If the lady were rich, ſhe was neither handſome, nor young; if rich, handſome, and young, ſhe would preſume too much on what ſhe brought; if handſome only, ſhe would be followed

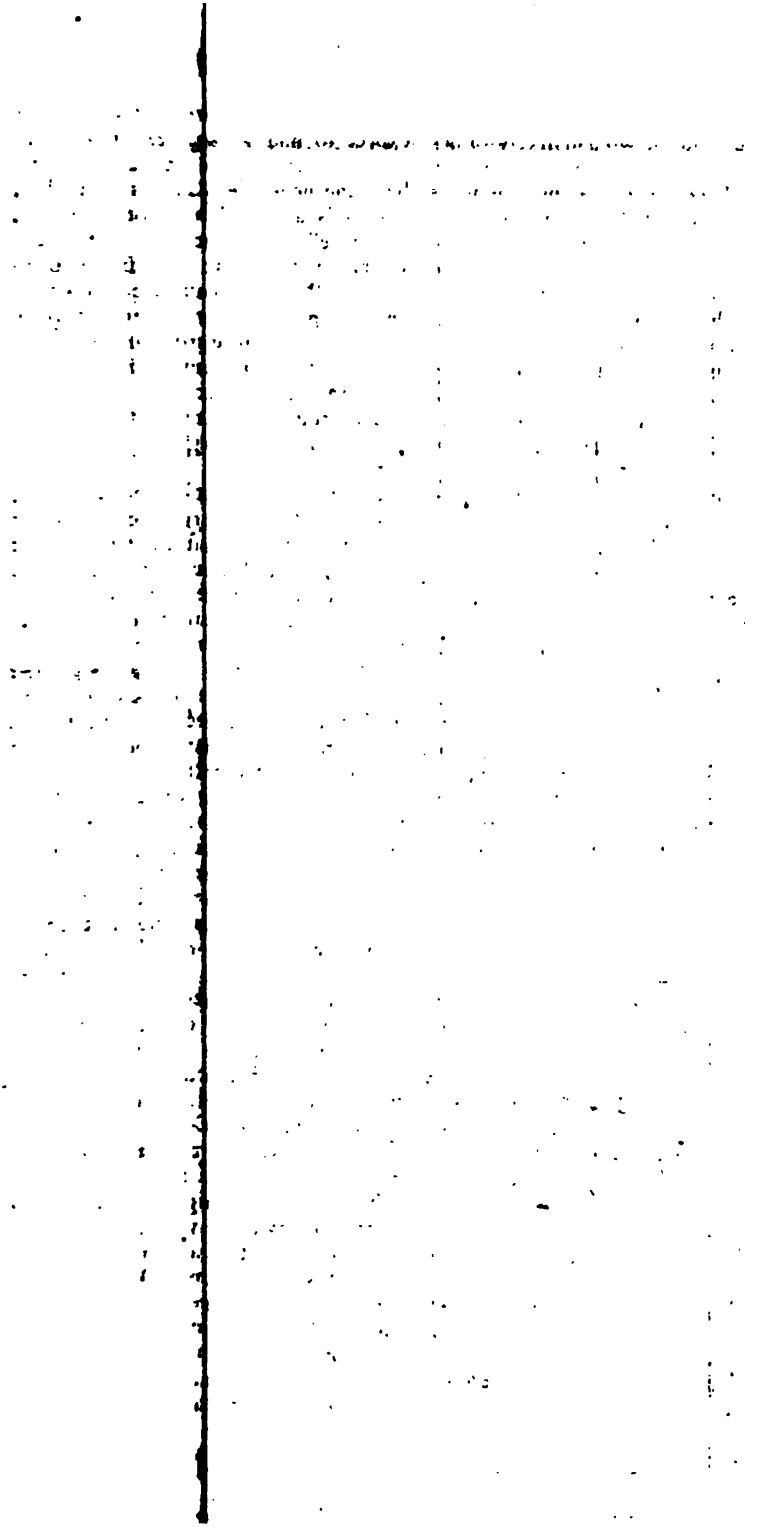

time, confe
the world ſt
ſtow this fe
end. Whe
of marriag
diſappoint m
the married
if it is to de
only: the
angel would
happineſs.
pleaſe muſt b
is as much
be expected
lity.

Beſides,
at its beſt,
uninterrupte
falſe; and
have entere
had it not
all novels ar
degrees, it
tions, and
opinion, and
many are wi
happineſs of
to conſiſt in
and affection
ties annexed
tertains a ju
to be told th
anxieties of
more than a
affords. Ho
calamities o
which all a
think, aggra
by perverſe
filial ingrati
fore, evils
The queſtio
greateſt poſſ
found; and
anſwered if
ſelves, and
unhappy in th
very happy
there can be
empt from a
and diſpoſitio
not the happ
comforts of li

Another p

Scale of Miles
CESTERSHIRE
WARWICKSHIRE
STAFFORDSHIRE
WORCESTERSHIRE
NORTHAMPTONSHIRE
Coventry
Rugby
Dunsmore Heath
Kenilworth
Kenilworth Heath
WARWICK
Leamington
Solihull
Birmingham
Sutton Coldfield
Dudley
Wolverhampton
Henley in Arden
Stratford upon Avon
Daventry
Southam
Lutterworth
Nuneaton
Tamworth
Atherstone
Bromsgrove
Droitwich
Evesham
Alcester
Redditch
Bromsgrove Lickey
Kidderminster
Bewdley
Stourbridge
Halesowen
Walsall
Lichfield
Tutbury
Burton upon Trent
Uttoxeter
Ashbourne
Derby
Leicester
Market Harborough
Lutterworth
Rugby
Coventry
Warwick
Stratford upon Avon
Evesham
Worcester
Droitwich
Bromsgrove
Birmingham
Solihull
Henley in Arden
Alcester
Redditch
Kidderminster
Bewdley
Stourbridge
Halesowen
Dudley
Wolverhampton
Walsall
Lichfield
Tamworth
Atherstone
Nuneaton
Coventry
Daventry
Southam
Leamington
Kenilworth
Warwick
Rugby
Dunsmore Heath
Lutterworth
Market Harborough
Leicester
Derby
Ashbourne
Uttoxeter
Burton upon Trent
Tutbury
Lichfield
Walsall
Birmingham
Bromsgrove
Droitwich
Worcester
Evesham
Alcester
Stratford upon Avon
Henley in Arden
Solihull
Sutton Coldfield
Dudley
Wolverhampton
Halesowen
Stourbridge
Kidderminster
Bewdley
Bromsgrove Lickey
Tamworth
Atherstone
Nuneaton
Coventry
Rugby
Dunsmore Heath
Kenilworth
Kenilworth Heath
WARWICK
Leamington
Southam
Daventry

man ſkill and eſtimation, that we loſe ourſelves in the contemplation of a deſign infinitely beyond our comprehenſion. Nothing, for example, will ſurpriſe us more, than that out of the many millions of men living upon the earth, or that have lived upon the earth, ſo few are known or diſtinguiſhed from the general maſs by moral or intellectual excellence, or by any kind of preeminence which mankind are willing to acknowledge. Millions are every year conſigned to the duſt, of whom no account is taken when living, and of whom no remembrance can be preſerved, when dead. Even of thoſe whoſe memories are reſcued from abſolute oblivion, there is a great proportion whoſe crimes only have obtained them a niche in the temple of fame, or whoſe merits are little calculated to add to the dignity of human nature, or make us in love with the rewards of ambition.

Of all ſtudies, biography may be reckoned the moſt inſtructive. It has many advantages over abſtract philoſophic writings, and many over general hiſtory. It comes more cloſely home 'to our buſineſs and boſoms,' than any other moral appeal that can be made; and he who gives his time and attention to the lives of eminent men, without himſelf becoming wiſer and better, is either to be pitied for his inſenſibility, or condemned for his obdurate neglect of improvement. Yet when we have peruſed all that the diligence and labours of eminent writers have handed down to us of this kind, we are naturally led to compare the numbers of thoſe who are thus diſtinguiſhed, with the myriads of human beings of whom no account is preſerved, and who have lived we know not why, how, or to what age and extent. We ſhall yet greatly abridge our liſt of perſons worthy of notice, if we reflect that thoſe nations only, who have made conſiderable progreſs in civilization, have produced ſuch men, and that nations benighted in ignorance and ſuperſtition leave no traces of intellectual worth, or individul moral excellence.

When, however, we come to examine the ſtate of our own nation, highly advanced as it is in civilization, in wiſdom, and in knowledge of all kinds, and when we obſerve the ſmall proportion the eminent characters bear to thoſe who are counted but as trees, and act but as machines, we begin to entertain certain ideas leſs favourable to the dignity of human nature, than the for-going reflections may ſeem to encourage. If we improve the many and frequent opportunities we have of diſcovering the faculties, diſpoſitions, and merits of the obſcure and unheard-of part of the community, we ſhall immediately diſcover that thoſe who have obtained the notice and applauſe of mankind, are not the *all* who have deſerved it. A favourite poet has beautifully alluded to the fate of humble merit in theſe well known lines:

'Full many a gem of pureſt ray ſerene
The dark unfathomed caves of ocean bear;
Full many a flower is born to bluſh unſeen,
And waſte its ſweetneſs on the deſert air.'

The experience of late years has convinced us that in the moſt obſcure walks of life, we may find all the genius and ability which ſhine in the moſt dignified ſtations; but certain unfavourable circumſtances, peculiar to the mechaniſm of ſociety, have prevented their appearing ſo conſpicuouſly.

Inſtances, indeed, of *ſelf taught genius*, as they are called, are ſo common, that no man can doubt that they would be much more ſo, if proper attention were paid to the education of the lower claſſes of the people; ſince we find that no depreſſion, no diſcouragement, can prevent ſome from advancing boldly into the ranks of poliſhed ſociety, and demanding the notice and reward due to them. We may, likewiſe, from a conſidera-

tion of human nature, believe that this will always be the caſe where encouragement is offered; and that the ſame inſtances of ability and genius do exiſt, but latently, in nations where no ſuch rewards preſent themſelves, and where a ſuperiority in genius, if not dangerous, would at leaſt be *uſeleſs*. The force of this latter remark ariſes from the well-known fact, that no barbarous nation has ever civilized itſelf: external means have always been employed. The progreſs of civil ſociety may be thus traced from the earlieſt records, and over the whole globe.

Theſe reflections lead to ſome important concluſions. If ſo few of mankind are deſtined to excel, and to be uſeful in eminent natural or acquired abilities, to do good to others, and to be known to poſterity; and if even theſe finiſh their courſe here, long before they have attained a very inconſiderable proportion of that knowledge of which the human mind is capable, and if the mind (which we almoſt always perceive to be the caſe) be as whole and *capable* at the hour of death as at the moſt vigorous period of life, are we not led to ſuppoſe that there is a ſtate of *being* after this life, wherein our knowledge ſhall attain to perfection, and wherein thoſe minds which have been inert here, ſhall attain their full exerciſe? Independently of all other proofs of the immortality of the ſoul, this ſurely may be allowed to have its weight. Nature has made nothing in vain. It does not appear reaſonable that ſo many myriads of human beings ſhould have been created, in the image of their Maker, merely to liſten to, and admire a few hundreds of their fellow-creatures, who, by certain adventitious circumſtances, have attained a ſuperiority over them in intellectual power and uſefulneſs.

The ſame concluſion will reſult, if we take into the account, what we know from revelation of the general deſign of Providence in the creation of man. The particular proceſs we are ignorant of; but that the good of man was intended, is undeniable. Nor can we ever loſe ourſelves in ſpeculations on this ſubject (I mean, on the apparent inequality of the condition of man) if we conſider that his Maker is a Being of Supreme Wiſdom and Goodneſs, and that the beauty and order of the creation are not the leſs objects of admiration becauſe *we* cannot fully comprehend them; becauſe beings, finite in their natures and faculties here, cannot comprehend the deſigns of a Being infinite and omniſcient.

Still leſs ought we to repine becauſe we may not be of the number of the favoured few, who are diſtinguiſhed by the applauſe and reſpect of mankind. It is a diſtinction not always enviable, and ſeldom acquired even by thoſe who have conſidered it rather as the object of ambition than the reward of merit. It is in every perſon's power, by a regular diſcharge of the duties of common life to acquire *eſteem* which will render his ſituation comfortable, and to cultivate principles which will render it death happy. More than this he *may* attain, but more than this is not in the common lot even of the moſt deſerving, and therefore not to be expected by a wiſe, nor deſired by a good man.

C. H.

INTERESTING ANECDOTES.

[From 'Anecdotes of ſome diſtinguiſhed Perſons, chiefly of the preſent and two preceding Centuries,' 2 vol. Crown 8vo]

QUEEN MARY.

IT appears, by the 'Account of the Death of Queen Mary, written by a Miniſter of State,' that a letter of her's to king William, diſſuading him from continuing to keep a Mrs. Villers as his miſtreſs, was found in her ſtrong box, to be delivered to her huſband when ſhe was dead. The character of queen Mary, written by

biſhop Burnet, contains a delineation of every female virtue, and of every female grace. He makes her ſay, that ſhe looked upon idleneſs as the great corrupter of human nature, and believed, that if the mind had no employment given it, it would create ſome of the worſt to itſelf; and ſhe thought, that any thing that might amuſe and divert, without leaving a dreg and impreſſion behind it, ought to fill up thoſe vacant hours that were not claimed by devotion or buſineſs. 'When her eyes,' ſays biſhop Burnet, 'were endangered by reading too much, ſhe found out the amuſement of work*; and in all thoſe hours that were not given to better employments, ſhe wrought with her own hands, and that ſometimes with ſo conſtant a diligence, as if ſhe had been to earn her bread by it. Her example ſoon wrought on not only thoſe that belonged to her, but the whole town, to follow it, ſo that it was become as much the faſhion to work, as it had been to be idle.'

King William has been ſuppoſed not to have been a very kind and tender huſband to his excellent queen. He was, however, much affected by her death, and ſaid, 'ſhe had never once given him any reaſon to be diſpleaſed with her, during the courſe of their marriage.' After his death, a locket, containing ſome hair of queen Mary, was found hanging near his heart.

QUEEN ANNE.

WHEN the huſband of this princeſs, George prince of Denmark, joined king William, James the ſecond merely ſaid, 'What, has the little *Eſtil poſſible* left me at laſt?' But when he heard of Anne's defection, he ſaid, 'Good God, am I then abandoned by my children?'

It appears by the memoirs of the times, that Anne was very anxious that no violence ſhould be offered to her brother's life, when he fought in the French army againſt thoſe of the allies. Had this princeſs lived longer, great efforts would moſt probably have been made to place him upon the throne of theſe kingdoms after her death. The duke of Marlborough and lord Bolingbroke were well affected to his ſucceſſion; lord Oxford was wavering.

Sarah, ducheſs of Marlborough, in her opinions,' ſays, 'The queen's journey to Nottingham was purely accidental, but occaſioned by the great fright ſhe was in when king James the ſecond returned to Saliſbury; upon which ſhe ſaid ſhe would jump out of the window rather than ſee her father; and upon that ſent to the biſhop of London to conſult with others what ſhe ſhould do, who carried her into the city, and from thence to Nottingham. She was never expenſive, but ſaved money out of her 50,000l. a-year, which, after ſhe came to the crown, was paid to prince George of Denmark, which was his by right. She made no fooliſh buildings, nor bought one jewel in the whole time of her reign.'

* Dr. Johnſon, with his uſual acuteneſs of remark and ſtrength of language, ſays in one of the papers of his Rambler, 'I have always admired the wiſdom of thoſe by whom our female education was inſtituted, for having contrived that every woman, of whatever condition, ſhould be taught ſome arts of manufacture, by which the vacuities of recluſe and domeſtic life may be filled up. Whenever,' adds he, 'chance brings within my obſervation a knot of young ladies buſy at their needles, I conſider myſelf as in the ſchool of virtue; and though I have no extraordinary ſkill in plain-work or embroidery, I look upon their operations with as much ſatisfaction as their governeſs, becauſe I regard them as providing a ſecurity againſt the moſt dangerous inſnarers of the ſoul, by enabling themſelves to exclude idleneſs from their ſolitary moments; and with idleneſs, her attendant train of paſſions, fancies, chimeras, fears, ſorrows, and deſires. Ovid and Cervantes will inform them, that love has no power but over thoſe whom he catches unemployed; and Hector, in the Iliad, when he ſees Andromache overwhelmed with terror, ſends her for conſolation to the loom and the diſtaff.

King George I.

The following account of this excellent prince is taken from a pamphlet written by Mr. Toland in the year 1705.

'The elector George-Louis was born in the year 1660. He is a middle-sized, well-proportioned man, of a genteel address, and good appearance. He is not much addicted to any diversion except hunting. He is reserved, speaks little, but judiciously. He understands our constitution the best of any foreigner I ever knew, and though he is well versed in the art of war, and of invincible courage, having often exposed his person to great dangers in Hungary, in the Morea, on the Rhine, and in Flanders, yet he is naturally of very peaceable inclinations. He is a perfect man of business, exactly regular in the economy of his revenues, reads all dispatches himself at first-hand, and writes most of his own letters. I need give no more particular proof of his frugality in laying out the public money, than that all the expences of his court (as to eating, drinking, fire and candles, and the like) are duly paid every Saturday night. The officers of his army receive their pay every month, as likewise his envoys in every part of Europe; and all the officers of his household, with the rest that are on the civil list, are cleared off every half-year.'

This prince understood English so ill, that the only method of communication between him and one of his ministers, who could not speak French, was in bad Latin. On coming to the crown of England, he told his minister, that as he knew very little of the constitution and customs of England, he should put himself entirely in their hands, and be governed by *them*: 'Then,' added he, 'you become completely answerable for every thing that I do *.'

This wise prince knew too well the sacrifices of their opinion to that of the sovereign, which ministers are but too apt to make in order to preserve their situation; and he had too much honour to tempt them by their own selfishness and desire of aggrandisement, and too much magnanimity to permit that they, [and perhaps the country itself, should suffer in consequence of his interposition in a manner unwarranted by the constitution, which with great wisdom takes off all responsibility for measures of government from the sovereign, and places it upon the ministers. A German nobleman was one day congratulating this monarch on his being sovereign of this kingdom and of Hanover. 'Rather,' said he, 'congratulate me on having such a subject in one, as Newton; and such a subject in the other, as Leibnitz.'

Lord Peterborough.

This lively nobleman was once taken by the mob for the duke of Marlborough (who was then in disgrace with them) and was about to be roughly treated by these friends to summary justice. He told them, 'gentlemen, I can convince you by two reasons that I am not the duke of Marlborough. In the first place, I have only five guineas in my pocket; and in the second, they are heartily at your service.' So throwing his purse among them, he got out of their hands, with loud huzzas and acclamations †.

* An idle prince,' says the acute Beaumelle, 'lets his ministers do every thing for him. Kings of a moderate capacity wish to be their own ministers. Kings of genius govern without ministers.'

† The late lord Bottetourt, in passing through Gloucester, soon after the cider-tax, in which he had taken a part that was not very popular in that county, observed himself burning in effigy in one of the streets of that city. He stopped his coach, and giving a purse of guineas to the mob that surrounded the fire, said, 'Pray, gentlemen, if you will burn me, at least do me the favour to burn me like a gentleman. Do not let me linger: I see that you have not faggots enough.' This good-humoured and ready speech appeased the fury of the people immediately, and they gave him three cheers, and permitted him to proceed quietly on his journey.

Lord Peterborough was cut for the ſtone at Briſtol. The ſurgeon (as uſual) wiſhed to have him bound. He refuſed; the ſurgeon perſiſted; till at laſt he told the ſurgeon, that it ſhould never be ſaid that a Mordaunt was ever ſeen bound. 'Do your beſt, ſir.' He then ordered the ſurgeon to place him in the poſition moſt advantageous for the operation, and in which he remained without flinching till it was over. In three weeks afterward he was at Bevis Mount.

The earl was ſo active a traveller, that queen Anne's miniſters uſed to ſay, that they wrote at him, and not to him. He ſaid of himſelf, that he believed he had ſeen more kings and more poſitions than any ſubject whatever. He left behind him in manuſcript the memoirs of his own life, in which he ſeems not to have ſpared his own character, and which, from delicate regard to his reputation, his amiable and elegant widow conſigned to the flames.

Lord Peterborough was a man of frolic. Richardſon, in his Anecdotes, ſays, 'The great earl of Peterborough, who had much ſenſe, much wit, and much whim, leaped out of his chariot one day, on ſeeing a dancing-maſter, with pearl-coloured ſilk ſtockings, lightly ſtepping over the broad ſtones, and picking his way, in extremely dirty weather, and ran after him (who ſoon took to his heels) with his drawn ſword, in order to drive him into the mud; but into which he of courſe followed himſelf.'

Dr. Freind, in his account of lord Peterborough's conduct in Spain, ſays, 'he never ſent off a detachment of one hundred men without going with them himſelf.' Of his own courage lord Peterborough uſed to ſay, that it proceeded from his not knowing his danger; in this agreeing with Turenne, that a coward had only one of the three faculties of the mind, 'apprehenſion.'

Lord Peterborough, when he lodged with Fenelon at Cambray, was ſo charmed with the virtues and talents of the archbiſhop, that he exclaimed at parting, 'If I ſtay here any longer, I ſhall become a Chriſtian in ſpite of myſelf.'

When he was in Spain, the remittances from England not coming to his troops, he ſupplied them for ſome time with money from his own pocket.

Speaking of himſelf and the French general who oppoſed him in the buſineſs of the Spaniſh ſucceſſion, he ſaid, '*Comme nous ſommes des grands ânes pour combattre pour ces deux gros benêts** !' alluding to the characters of the two competitors for the Spaniſh monarchy.

Lord Peterborough was aſked one day by a Frenchman, if we had the ceremonies of the coronation of a king among us.—'*Sacre t'on les Rois chez vous*, my lord?' '*Oui*,' replied the witty peer; '*on les* ſacre *et on les* maſſacre *auſſi* †.

King George II.

When this prince was deſired to ſign the death-warrant for Dr. Cameron, he ſaid, in the true ſpirit of mercy that has ever diſtinguiſhed his illuſtrious houſe, 'Surely, there has been too much blood already ſpilt upon this occaſion!'

This prince ſeemed to have none of that love of individual and diſtinct property which has marked the character of many ſovereigns. His majeſty came one day to Richmond gardens, and finding the gates of them locked, while ſome decently-dreſſed perſons were ſtanding on the outſide, called for the head-gardener in a great paſſion, and told him to open the door immediately: 'My ſubjects, added he, 'ſir, walk where they pleaſe.'

The ſame gardener complaining to him one day that the company in Richmond gardens had taken up ſome of the flower-roots and ſhrubs that were planted there, his only reply was, ſhaking his cane at him, 'Plant more then, you blockhead you.'

* What two great aſſes we are to fight for two ſuch great ſimpletons!

† This is a pun, which, of *courſe*, cannot be rendered in Engliſh.

The THEORY *of the Preposition* TO: *in which its Derivation from the Substantive* TOE *is examined and demonstrated.*

Written (after reading a very serious Publication on a similar subject)

By Mr. BEATTIE.

'Come, and trip it, as ye go,
'On the light fantastic Toe.'

AS a friend to the dignity of man, and surveying innovations in philosophy and politics with equal distrust; I cannot observe, without alarm and astonishment, the late increase of natural philosophers, as they call themselves; not improperly, I own, if we are to understand the word *natural* as a substantive. I consider them as the missionaries of a hostile power, encouraging us to mutiny, and bribing us to migration; seducing our attention from *words* to *things*; from words, the characteristic of rationality, the repository of science, the vehicle of truth, to *things*, whereof men and brutes participate equally, and which jumble and confound all that is lovely and true, with all that is false and abominable.

Camillus, a brave and patriotic warrior, often merited the thanks of his countrymen; but never perhaps so highly, as when, by proposing new prospects of advantage and new causes of endearment, he persuaded the Roman youth, just setting out for Veii, to rebuild and inhabit the city of their fathers. A similar service will that man do to philosophy, who shall restrain it from chasing the novelties of modern experiment, and keep it in those ancient and venerable seats, which Pythagoras, Zeno, Aristotle, Plato, Chrysippus, and Philetas have fortified and adorned. '*Signifer, statue signum; hic manebimus optime* *.

I congratulate my country and the age I live in, that literary patriotism is not extinguished; and that some noble efforts have of late been made, discovering to the curious philologist unbounded regions of comparison and conjecture. The conjunction *if* is at last referred to *giving*; and its equivalent ει (ei) derived from ειμί (eimi) and *si* from *sum*. The preposition *ad*, and *at* the disjunctive, are no longer different words, but the same word; *to* and *too* coalesce in like manner: not to mention other conjunctions, which are now found to signify a *chest*, perhaps, or *passage*, or *pantry-door*. A great part of the reasoning which led to such valuable discoveries, is indeed so brief and simple, that, as happens with regard to most discoveries truly valuable, I often wonder that I did not hit upon it myself. But, in this subject, I am resolved to deserve the praise of doing well, though I cannot pretend to be the first who has done so. Uncultivated science is like an uncultivated country, where to walk first may be most honourable, but where to follow is often as profitable, and always more safe.

Of the journey, however, there is one part, in which I no more condescend to be a follower; but with that noble ambition, which I flatter myself is no ambiguous characteristic of a great mind, have dared even to outstrip my guides. It has been proved by learned men, that the *ad* and *at* of the Latins, and the English *to* and *too*, are severally equivalent. I go farther: I not only compare those particles among themselves, but apply them to the invariable standard of nature; and hope to prove that the English *to* is synonymous not only with *too*, but with *toe* in like manner; from which I shall show that its origin is derived, and to which all its significations refer. The correspond-

* Liv. V. 55.

ent Greek and Latin particles I ſhall allude to as far only as they may ſerve to illuſtrate this main point: for of my diſcoveries, though I am not ſelfiſh enough to deſire that the advantage ſhould be withheld from other languages and nations, yet I think it highly reaſonable, that *my* language and *my* nation ſhould enjoy the firſt benefit and honour.

Perſons, unaccuſtomed to the more recondite ſorts of grammatical diſquiſition, will perhaps think my reaſoning in ſome particulars far-fetched and minute. To ſuch I ſhall only ſuggeſt the example of the good old gentleman in the play, who when admoniſhed to mind his own buſineſs, and not concern himſelf about that of other people, nobly replied, '*homo ſum, humani nihil a me alienum puto.*'—I, likewiſe, who am a man of letters, think nothing foreign from my ſpeculations which regards even a letter.

In the firſt part of my ſubject, in which the dignity of the foot and toe, and their conſequent fitneſs for giving riſe to a prepoſition, come naturally to be conſidered, I ſhall not inſiſt on that ſuperſtitious, or political, attention, wherewith the women of China (a country which, in ſeveral diſcoveries, has got the ſtart of Europe) contract and faſhion the feet of their daughters. Nor need I expatiate on the wiſdom of the ancient Romans, who diſtinguiſhed their great men from the vulgar, not by ſtars, garters, or ribands, but by boots*: far leſs will I pollute my page with the modern foppery of buckles and roſe-knots; or of ſhoes, which now can hardly contain the feet, but which were formerly in this nation ſo unweildy, that it was neceſſary to ſupport their points by a ſtring from the knee. Nor ſhall I examine the theory of dancing; an art with which the honour of the feet is intimately connected, and which the ſenate and people of Rome held in ſuch reverence, that except in religious ſervice they did not ſuffer it to appear: an art, however, much practiſed by the Greeks, who enjoined it by law, diſplayed it in their moſt ſolemn exhibitions, and adorned it with their nobleſt poetry; an art every where recommended by the powerful voice of nature; but alas! whoſe martial and majeſtic dignity died with that prince of grammarians, Scaliger, who was the laſt man that capered in the true *pyrrhick* of the ancients.

Remember, I beſeech you, what diſtinguiſhed reverence, according to the laws of ancient hoſpitality, which were not cramped with feudal ſervitude or finical affectation, was invariably paid to the feet. Fair ladies and princes aſſiſted at waſhing the feet of the pilgrim; an honour ſeldom or never offered to the hands or face. Even we, in theſe days of degeneracy, while we kiſs the cheek of our friend, or the hand of our ſovereign, ſalute, in teſtimony of more profound veneration, the great toe of the pope. Even we *tread*, or talk at leaſt of *treading*, the paths of virtue; and while by *unhandineſs* we denote but a trifling and curable inadvertency, we beſtow the appellation of a *falſe ſtep* on crimes irreparable and unpardonable.

I muſt not omit to mention a well-known fact; that men, who, in puniſhing an equal, would ſtrike with the fiſt, avenge themſelves of an inferior by a kick with the toe: a proof, that with this organ are aſſociated ideas of authority and independence which to the fiſt do not belong. The heroes of Homer, too, while inſulting a vanquiſhed enemy, preſs him, as the poet ſays λαξ with the foot or heel; and Virgil poſitively affirms, that Turnus, having ſlain the gallant youth Pallas, preſſed him with the left foot. *Lævo preſſit pede* are the words; and I would recommend it to thoſe, who reject in this particular the authority of Virgil, to conſider their own ſtrength; or, as another great author has it,—*Quid ferre recuſant, quid re-*

* See Hor. Sat. VI. 27.

lacus humeri; leſt they ſhould be as unequally matched with the illuſtrious poet of Mantua, as Evander's ſon was with the valiant, though unſucceſsful lover of Lavinia. To what quarter ſhall we turn, where teſtimonies will not preſent themſelves of the dignity of the foot!

By the foot is denoted the zeal of friendſhip, as well as the majeſty of power. To give conſent by nodding the *head* may have been agreeable to the faſhion of Olympus, as it was Jupiter's conſtant practice; but among mortals would be conſidered as a mark of frigid approbation; and a ſhow of *hands* may determine the iſſue of an election, but does not manifeſt uncommon regard or anxiety. But *pedibus ire in ſententiam* ſignified, among the wiſe Romans, affectionate confidence, and eager approbation. Need I further urge the opinion of a certain philoſopher, who aſſerts that the ſoul enters its body at the feet (even as the grand ſignior does his bed) a doctrine which, if not demonſtrably certain, muſt have been in ſome repute among thoſe who drank of that deep fountain of philoſophy, the Peripatetic ſchool; the principles whereof were, as the name implies, connected with *walking*, and by conſequence with *feet*.

The honourable appellation of *foot* is not confined to animals, but is applied to every thing uſeful or great in the works of art and nature. We do not ſay the *leg* of a table, chair, or column, but the *foot*: we ſpeak in like manner of the *foot* of a pyramid or mountain, never the *leg*. Italy, formerly the miſtreſs of nations, appears in the map as a *boot*; which I own ſuppoſes a *leg*, but in which a *foot* is alſo comprehended; and the ſole of that boot faces the ſouth, a very reſpectable quarter of the ſky; and the toe points at Sicily, intimating its authority to kick even the granary of the world (for ſo that iſland was ſometimes called) without being in the leaſt intimidated by Scylla and Charybdis: the *ingurgitations* of the one, the *evomitions* of the other, or even the thundering *eructations* of Etna itſelf. We characteriſe the confidence of friendſhip by ſaying that people are on a good *footing*: and though Ceſar had a *hand* in the invaſion of Britain, it would have required a power greater than Ceſar's to get *footing* there.

I need not remind the intelligent reader, that *feet* are the foundation of meaſure, and the appraiſers of quantity; a ſufficient proof of the truſt repoſed in them by the wiſdom of our forefathers. Nay, Horace extends their influence to the menſuration of quality as well as of quantity, when he ſays, *Metiri ſe quemque ſuo pede verum eſt*. Nor can we fail to obſerve, in many names denoting quality, and in many abſtract terms of ſcience, an alluſion to the ſupport of the feet. Thus in Latin *gradus* (ſtep) degree; *caſus* (falling) caſe; and in our own tongue *ſuppoſition*, *ſubject*, *ſupplant*, *underſtanding*, *inculcate*, and many others. Tragedy too, and comedy, derived from the foot one of their ancient deſignations; being diſtinguiſhed and named by the *ſock* and *buſkin* worn on the feet of the actors.

And this leads me to remark, in more general terms, that poetry, the nobleſt effort of genius, is formed and divided, as every ſchoolboy knows, by *feet*. Even humbler ſorts of writing claim a connexion with the ſame honourable member, denominating themſelves πεζος λογος or *ſermo pedeſtris*. Nor muſt I overlook a very notable coincidence between the Engliſh noun *proſe* or *pedeſtris ſermo*, and the Greek προς (pros) which actually ſignifies the ſame thing with our prepoſition *to*, whoſe affinity with *toe* I am endeavouring to eſtabliſh. I may add, that Horace, whoſe ſkill in criticiſm can hardly be diſputed, ſeems to be of opinion, that a perſon ſtanding on one foot will not be ſo capable of poetic compoſition, as if he were ſtanding on both feet *: a certain evidence, if

* Hor. Sat. I. 4.

the fact be acknowledged, that human, as well as grammatical feet, are ſubſervient to poetry. For of a member whoſe abſence is detrimental, the preſence muſt be beneficial.

Pulchrum eſt, ſays a Roman poet, *digito monſtrari et dicier hic eſt* *. Now it being *unpolite*, which is the reverſe of *pulchrum*, to point with the finger at individuals in the ſtreet, I am ſure every learned reader will agree with me, that *digito* in this paſſage muſt mean, not the finger, but the *toe*, a ſenſe in which it is uſed by Virgil †, and other authors: "it is a fine thing to be pointed at with the toe." Every body muſt have obſerved, that it is natural for us to turn our toes toward the perſon whom we look at: Dancing-maſters, indeed, and Frenchmen, turn theirs aſide; which is called *turning out* their toes, that is, degrading them, as a prime miniſter is degraded when he is *turned out*: but that attitude is wholly artificial, and ſo inconvenient, that the late dauphin of France, if we may believe the newſpapers, loſt his life by it. To which I may add, that the article in Greek, correſponding with our Engliſh *the*, is το: that the word *article* ſignifies a *joint*; and that by ſome Latin writers, *articuli pedis*, the joints of the foot, are uſed for the *toes*.

I have now given abundant evidence of that reſpectful attention which has been paid to the foot, and eſpecially to its toes; by which, as a plant by its flower, it is both characteriſed and adorned. Permit me, however, to add, that the feet and toes, which have thus, in the moſt enlightened nations, been the ſeat of authority, the emblem of rectitude, the ſpring of ſcience, and the object of affection and reverence, are alſo the diſtinguiſhing characteriſtic of the human race. For ingenious anatomiſts, after a moſt accurate diſſection of the Ouran Outang's body (anatomiſts never think of ſouls) find no criterion ſo deciſive as the toes and the feet, whereby his ſpecies may be diſtinguiſhed from the human. And although the godlike Pythagoras, or the divine Plato, who had a glimpſe of the preeminence of humanity, defined man to be *implume bipes*, a featherleſs two-footed thing, and though Salluſt and Ovid diſtinguiſhed him by the *Os ſublime*; yet both theſe characters apply to the Outang; whoſe feet, nevertheleſs, are prominent at the heel, and whoſe great toes and thumbs very nearly reſemble. Accordingly, the ſagacious Greeks, though content in common language to denominate the human ſpecies, from its erect ſtature *Anthropos*, (a term, by the by, of no great preeminence; for at Athens, when the article was prefixed, it belonged peculiarly to the hangman) yet, when they wiſhed to ſpeak with accuracy in mentioning an individual, they honoured him with the appellation of *two toes* (τοσσος:) a word, which has long been obſolete; but whoſe former exiſtence and ſignification appear ſufficiently from its neuter τοσσο.

It may therefore be reaſonably inferred, that our prudent anceſtors, who, in forming their prepoſitions, often employed the name of a paſſage, a ſeat, or a door, would not overlook a member ſo important and honourable as the *toe*. This inference would ſeem to be juſtly drawn, according to the mode of argument uſually employed in ſuch caſes; wherein demonſtration is ſeldom ſought, becauſe it is not often to be found: and this inference will, I truſt, force conviction in thoſe who reflect, that the prepoſition *to* really exiſts, and is found to be from experience what from reaſoning we ſhould have expected. But as in the breaſt of the candid reader I wiſh not to leave even the ſhadow of a doubt, I will in few words explain, why the prepoſition *to*, from its connexion with the noun *toe*, came to acquire that ſignification, and that only, which it now poſſeſſes.

* Perſius, Sat. I.

† Æneid. V. 426.

It cannot be doubted, that, in describing the motions of the body, regard will naturally be had to the parts of the body moved, and to their relative positions. Thus we speak of turning to the *right hand* and to the *left*: and in like manner some ancient nations, among whom, perhaps, the refinements of *right* and *left* were not thoroughly understood, spoke of turning to the *shield* and to the *spear*; phrases, which a learned grammarian of our own, Mr. John Milton, has adopted *. We say in Latin, *adversis opponere pectora rebus*, &c. and in the modern tongues, to talk *tête-à-tête*, to *confront*, to meet *face to face*, to drink *hand to fist*, to walk *side by side*, to sit *cheek by jowl*, &c.

Now the locomotive powers of man exert themselves by his legs and feet; and by man, therefore, motion will most naturally be expressed with some allusion to these members. Accordingly *pedem vel gradum promovere, inferre*, &c. and many like expressions, are frequently met with. We read too of the *swift-footed* Achilles; of pilgrims requesting the stranger to direct their *feet* in peace; and of fairies, who 'foot it featly, ranged in ringlets gay.' Now to any common observer it must be obvious, that *crus inferre*, &c. would be uncouth Latin, as the *swift-legged* Achilles would seem vulgar in English; or a pilgrim requesting that his *legs* might be directed in peace; or fairies who should be said to *leg it* featly. It is true, that in some assemblies famous for eloquence, the members are often said to be on their *legs*, but never on their *feet*: but this phrase I take to be figurative; though I own, that to express the act of speaking by an allusion to the legs is not less incongruous, than to signify that of walking, dancing, or hopping, by an allusion to the tongue. But to return from this digression.

It seems to follow, from what has been said, that motions of the body are commonly and naturally characterized by motions of the feet. Now motions of the feet are in like manner characterised by the toes and the heel. For, to advance the foot, to turn away the foot, are motions merely relative, and connected with the position of some external object: when the foot is advanced toward one quarter, it is removed from the quarter opposite. To distinguish motion accurately and absolutely, we must, therefore, observe the position of the foot itself; as that is indicated by the direction of its two extremities, the heel and toes.

If all this be granted, and granted all this must be; if, in speaking of the flight of an enemy, we scruple not to affirm that he shewed a clean pair of *heels*; if a side long motion is so denominated because it is a motion toward the *side*; if a man if said to move backwards, because he moves in the direction of the *back*; surely, it must be rational and analogical to infer, that he is said to advance *towards*, or (as it should be written) *toewards* an object, who advances in the direction of the *toe*. And, as our prepositions *to* and *towards* are undoubtedly of the same original, can it be doubted, that from the substantive *toe* the preposition *to* is derived? I will not insult the good sense and erudition of my reader, by supposing that this can seem any longer uncertain; nor need I give additional evidence of a point which is already established incontestably.

Permit me, however, to remark, before I leave this delightful subject, that the Latin *versus*, signifying *towards*, is the same word with *versus* the noun, which denotes an assemblage of poetical feet. This proves, that the motion signified by *versus* is connected with *feet*; nor is this at all inconsistent with what I formerly remarked concerning the connection of feet, or *sermo pedestris*, or prose, with the Greek προς (pros) whose meaning corresponds so nearly with that of the Latin *versus*.

* Paradise Lost, IV. 785.

If these reflections, by opening new sources of grammatical discovery, shall reclaim the studious from experiment to science, my midnight oil has not burned in vain, and my gray hairs will go down to the grave with honour. Horace affectionately compares the words of a language to citizens in a state; likening to the censor who disgraces a citizen, the critic who degrades a word. How shall we answer to our conscience and country, if we suffer not one word only, but the whole grammatical commonwealth, to incur the danger of degradation, while we are establishing *(visum tuentis amici?)* the specific difference of words and vermin, or anatomising the viscera of a caterpillar. We have received from our forefathers a government stored with the treasures of legislative wisdom, and a language rich in the wealth of genuine science: both it behoves us to watch with vigilance, and to protect with vigour. Man, who is a being active and intelligent, requires freedom that he may act, and opportunity, that he may learn; and they who despise etymology, the repository of science, and they who contemn law, the guardian of liberty, deserve alike the punishment of traitors.

A Picturesque Description of the River RHINE, *from its Sources in Swisserland to its Entrance, under different Names, into the* German Ocean: *With Historical Anecdotes and Reflections. Continued from Page 245.*

THE CONTENTS.

Haguenau.—Rastadt.—An Anecdote.—Carlsruhe.—Excellent Character of the Margrave of Baden-Durlach.—Philipsburg.—Death and Character of the Duke of Berwick.—Spire.—Manheim.—Barbarous Policy of Lewis XIV.—Frankendahl.—Worms.—Luther.—Curious Picture.—Another Admirer of the Rhine.—Mentz.—Picturesque Scenery.—Bingen.—The Tower of Mice, and the Archbishop.

THE last place in Alsace, bordering on the Rhine, is the strong fortress of Haguenau, seated on the river Motter, which divides it into two parts. It was formerly a free imperial city; but the French became masters of it in 1673. The great Montecuculi besieged it, in vain, in 1675, but, in the subsequent wars, it was more than once taken and retaken.

Lower down, in Suabia, is Rastadt, a regularly-built and elegant city, the capital of the margravate of Baden-Baden. It has a stately palace, which was formerly adorned with a great number of paintings; but they were considerably diminished by father Mayer, who had such influence over the margravine dowager, as to cause pictures to the value of 50,000 guilders, which he judged to be too much in the style of our Thomson's Musidora *, to be committed to the flames. If their subjects were as inoffensive as the tale of Musidora by the most chaste and delicate of poets, the good father, perhaps, carried his refinement too far. At least, there is some truth in a French maxim, 'C'est l'intention des figures d'un tableau, & non pas les nudités, qui forment l'indecence d'une peinture.'—This town is celebrated for the treaty of peace concluded, in 1714, between the emperor and France.

About eight miles further is the elegant city of Carlsruhe, a name which signifies *Charles' Rest*. It is seated in a fertile district along the banks of the Rhine, in the margravate of Baden-Durloch, and was built, at

* Summer, line 1301.

the commencement of the preſent century, by the margrave Charles William, on a very regular plan. It conſiſts of one principal ſtreet of an Engliſh mile in length. This ſtreet is at a conſiderable diſtance in front of the palace, and in a direction parallel with it. All the other ſtreets go off at different angles from the principal one, in ſuch a manner, that whichſoever of them you enter, walking from it, the view is terminated by the front of the palace. The length of theſe ſmaller ſtreets is aſcertained, none of them being allowed to encroach on the ſpacious area, which is kept clear before the palace; but the principal ſtreet may be extended to any length; and as many additional ſtreets as they pleaſe may be built from it, all of which, according to this plan, will have the palace for a termination. The houſes are all as uniform as the ſtreets, being of an equal ſize and height; ſo that one would be led to imagine, that not one of the inhabitants is in any conſiderable degree richer or poorer than his neighbour. There is, indeed, a few new houſes more elegant than the others, belonging to ſome of the officers of the court; built at one ſide of the palace; but they are not, properly ſpeaking, in the town. The margrave inceſſantly endeavours to introduce induſtry and manufactures among his people. There is a conſiderable number of Engliſh tradeſmen, who make Birmingham work, and inſtruct the inhabitants in that buſineſs; and, at the time of the great emigrations from Geneva, he engaged many watch-makers from that city to ſettle here, by granting them encouragements, and privileges of every kind. In ſhe, he allows no opportunity to paſs unimproved, by which he can promote the comfort and happineſs of his people. A prince of ſuch a character is certainly a public bleſſing; and although he is an abſolute ſovereign, the people are fortunate who are born under his government: but far more fortunate they who live under a government which can protect them independently of the virtues, and in ſpite of the vices, of their ſovereign.

The Rhine, after leaving Carlſruhe, enters the German circle of the Upper Rhine, in which the firſt conſiderable place it waters is Philipſburg. This town, which is ſeated in a moraſs, is deemed one of the bulwarks of the empire. It is ſubject to the prince biſhop of Spire, but its fortifications belong to the empire, in the ſame manner as Bergen-op-zoom is ſubject to the elector palatine of the Rhine, as marquis of that town and diſtrict, while its almoſt impregnable fortifications belong to the Dutch. Philipſburg has undergone ſome ſevere ſieges; particularly that in 1734, when the celebrated duke of Berwick, natural ſon to king James II, was killed by a cannon ball, between his two grandſons, as he was taking a view of the trenches. This great man was one of the moſt illuſtrious generals that ever commanded the French armies. He was born in 1671, at Moulins, in France, where his mother, Arabella Churchill, then was, on her return from the waters of Bourbon. He was a ſoldier from his earlieſt youth: he was wounded at the ſiege of Buda, in 1686, and was diſtinguiſhed in the ſignal victory, which, about the ſame time, the Imperialiſts obtained over the Turks. When his father abdicated the throne, he accompanied him to France. In the war which enſued in Ireland, he ſignalized himſelf at the ſiege of Londonderry, and, at the battle of the Boyne, had a horſe killed under him. In 1703, Lewis XIV appointed him to the chief command of the forces ſent to ſupport the claim of his grandſon, Philip V, to the throne of Spain. In a ſingle campaign, he reduced a great number of important towns and fortreſſes. He was recalled to take the command of the troops ſent againſt the inſurgents of the Cevennes, whom he effectually ſubdued. In 1705, he reduced the county and town of Nice, for which, in the following year, he was elevated to the dignity of marſhal of France.

Having reſumed the chief command in Spain, he obtained the great victory of Almanza, which ſecured to king Philip the conteſted throne. It is remarkable, that in this battle, the victorious French and Spaniſh army was commanded by an Engliſhman, and the vanquiſhed confederates by the earl of Galway, a Frenchman *. He reduced Barcelona in 1714; and for his eminent ſervices, was created duke of Leria and Xerica in the kingdom of Valencia, a grandee of Spain of the firſt claſs, and generaliſſimo of the Spaniſh forces. His great military talents lay dormant till the year 1733, when, on the death of Auguſtus II, king of Poland, and the diſputed ſucceſſion which enſued, he was appointed to the command of the French forces in Germany, and after having reduced the important fortreſs of Khel, he undertook the ſiege of Philipſburg, in which he terminated his career of military glory †.—This place, however, was taken by the French, about a month afterward, but was reſtored the following year.

Seven miles north of Philipſburg is the city of Spire, the capital of a ſovereign biſhopric in the circle of the Upper Rhine. It is ſeated on the weſt ſide of the river, in a delightful plain, where it receives the ſmall river Spirebach. This city was burnt, in 1689, by the order of Lewis XIV. The cathedral, which was likewiſe deſtroyed in the undiſtinguiſhing conflagration, contained the ſuperb monuments of eight emperors and three empreſſes. Theſe were broken to pieces by the French, who likewiſe opened and pillaged the imperial vaults, and ſcattered abroad the bones of the illuſtrious dead. Lewis did not foreſee that, a century afterward, his own tomb and aſhes, with thoſe of his anceſtors and deſcendants, in the magnificent church of St. Denys, would be treated by the French themſelves with no leſs indignity.—In conſequence of the deſtruction of Spire, the imperial chamber was removed to Wetzlar, where it has continued ever ſince. Spire, at preſent, is again under the dominion of the French, with all the places of the empire, on the weſt ſide of the Rhine, Mentz alone excepted.

Six miles north of Spire, is Manheim, the ſecond city in the palatinate of the Rhine, and the reſidence of the Elector Palatine. It is one of the moſt beautiful cities in Germany, the ſtreets, which are as ſtraight as a line, interſecting each other at right angles. The inhabitants are computed at 24,000, including the garriſon, which conſiſts of 5000. The fortifications are good; and the town

* Henry marquis de Ruvigni, a French refugee, created earl of Galway by king William III. He received two cuts in the face in this battle, and ſtopped not his flight till he arrived at Tortoſa, near the mouth of the Ebro. The marquis de las Minas, the Portugueſe general, eſcaped to Xativa: he was run through the arm, and had ſeen his miſtreſs, who was fighting in the dreſs of an amazon, killed by his ſide.

† The marſhal duke of Berwick is juſtly reputed one of the greateſt of modern commanders. No general ever had the *coup d'œil* quicker or more accurate; whether, in battle, to diſcover the blunders of an enemy, and make thoſe deciſive movements which carry victory with them; or, in a campaign, to obſerve and take advantage of poſitions, on which the ſucceſs of the whole depends. His character in private life, though no leſs worthy of admiration, is leſs known. 'It was impoſſible to behold him,' ſays Monteſquieu, 'and not to be in love with virtue, ſo evident were tranquillity and happineſs in his ſoul.' No man ever knew better how to avoid exceſſes; or, if I may ſo expreſs myſelf, to keep clear of the ſnares of virtue. He had a great fund of religion, and was fond of the clergy, but could not bear to be governed by them. No man ever followed more ſtrictly thoſe precepts of the goſpel which are moſt troubleſome to men of the world; no man, in a word, ever practiſed religion ſo much, and talked of it ſo little. He never ſpoke ill of any one, nor beſtowed any praiſe upon thoſe whom he did not think deſerving of it. In the works of Plutarch I have ſeen, at a diſtance, what great men were; in him I behold, at a nearer view, what they are.' *Sketch of an Hiſtorical Panegyric.*

acquires additional ſtrength from being almoſt ſurrounded by the Rhine and the Neckar, and ſituated in a flat, not commanded by any riſing ground. The electoral palace is a magnificent ſtructure; and the cabinet of natural curioſities, and the collection of pictures are much vaunted. From this palace, in 1674, the elector beheld the dreadful conflagrations in the palatinate, no leſs than two cities, and five-and-twenty towns in flames, while Luſt and Rapine walked hand in hand with Fire and Sword. Such were the orders of Lewis XIV, too literally executed by Turenne, the ever infamous hero of the age. The barbarous policy of the royal ſavage, which can never be held in too much deteſtation, was repeated in 1689. Men, women, and children were then driven from their habitations in a ſevere ſeaſon, to wander about the fields, and to periſh with hunger and cold; while they beheld their houſes reduced to aſhes, their goods ſeized, and their poſſeſſions pillaged by the rapacious ſoldiery. This terrible execution began at Manheim, where not only the palaces of the electors were razed to the ground, but their very tombs were opened in ſearch of hidden treaſures, and their venerable duſt ſcattered in the air. The flames lighted by Turenne, however dreadful, were like ſo many torches, compared to the preſent frightful conflagration, which filled all Europe with horror. And yet, in 1693, were theſe dreadful ſcenes of cruelty and barbarity repeated. The French general Chamilly having taking Heidelberg by ſtorm, put the ſoldiers and citizens promiſcuouſly to the ſword; and when the maſſacre ended, rapine began. The houſes were burnt, the churches pillaged, the inhabitants ſtripped, and the perſons of the women expoſed to violation, without reſpect to age or condition *. It is no wonder, then, that the particulars of theſe dreadful ſcenes have been tranſmitted from father to ſon, and are ſtill ſpoken of with horror by the peaſantry of the palatinate, among whom the French nation is held in deteſtation to this day.

About fourteen miles north of Manheim, we paſs near Frankendahl, a ſtrong town in the palatinate, remarkable only for having been taken by the Spaniards in 1623, by the Swedes in 1632, and by the French in 1689, when it was burnt to the ground. Seven miles further, in the circle of the Upper Rhine, but within the limits of the palatinate, is the imperial city of Worms, the capital of a biſhopric of the ſame name, whoſe biſhop is a prince of the empire. This place is celebrated for the diet held here in 1521, when the illuſtrious Luther appeared to juſtify his opinions before the emperor Charles V, and the princes and prelates of the empire. When his friends would have diſſuaded him from appearing at Worms, by urging the example of John Huſs and Jerome of Prague, who were burnt at Conſtance, notwithſtanding the ſafe-conduct granted them by the perjured Sigiſmund, he anſwered, with an intrepidity that marked his character, 'I am lawfully called to appear in that city, and thither I will go, in the name of the Lord, though as many devils as there are tiles on the houſes, were there combined againſt me †.' To the honour of Charles, bigot as he was, he did not imitate the conduct of his predeceſſor.—Among the curioſities in this city, is a picture, over a moveable altar, near the entrance of St. Martin's church, which, from the oddneſs of the conceit, and the low and profane idea of the painter, has not eſcaped the notice of travellers.

* Upon the firſt entrance of the French, the ladies of the place ſent to ſolicit the general to ſpare the honour of the women. This he promiſed to do, and ordered them all to retire into the great church, where, contrary to his promiſe, they were brutally raviſhed and ſtripped.

† See Memoirs of his Life, in our Magazine for March and April 1793.

At one of the corners on the top of it, is represented the Omnipotent, 'whom the heaven of heavens cannot contain,' in the form of an old man, addressing himself to the Virgin Mary, who is placed on her knees in the midst of the picture, holding the infant Jesus by the feet, and ridiculously putting the head of the Redeemer of the World into the hopper of a mill, which is turned by the twelve apostles, by the help of a wheel, while the pope is upon his knees, receiving the hosts that fall from the mill into a golden chalice, one of which he presents to a cardinal, who gives it to a bishop; the bishop presents it to a priest, and the priest give it to a layman.—The painter, however absurd, was, perhaps, devoutly serious. In these times, however, he would, no doubt, be thought to have exhibited an admirable satire against the absurd doctrine of transubstantiation; a doctrine, which, with the other corruptions of the church of Rome, has contributed to form so many infidels on the continent, among the *soi-disant* philosophers who adopt opinions without inquiry, and, instead of examining the evidences of Christianity, its pretensions to divine authority, its genuine doctrines, and its glorious views, reject it altogether, on account of the wretched absurdities by which, in the darkest ages, a series of wicked and ambitious men have obscured its native lustre, and sullied its intrinsic excellence.

Twenty miles northwest of Worms, is the city of Mentz, the capital of the archbishopric and electorate of the same name, in the circle of the Lower Rhine. Here we have the pleasure of meeting, for the first time, with an agreeable companion, another admirer of the Rhine, for the remainder of our voyage down this noble river; one who is, by turns, lively, arch, and satirical; serious, philosophical, and moral; yet ever engaging, pleasing, and instructive. Many of our readers, perhaps, will recollect the name of Dr. Cogan, who has lately published his account of the Rhine, terminating at Mentz, and to whose interesting narration we shall, therefore, have frequently to refer *.

Mentz is finely situated on the west side of the Rhine below its confluence with the Maine, at the angle formed by which is one of the fortified suburbs, named Gustavusburg; and, on the side opposite the city, connected with it by a bridge of boats, is the strong town of Cassel. Mentz claims the invention of printing, but its pretensions are disputed by Strasburg and Harlem. Dr. Cogan, in an ingenious dissertation, has stated their respective claims, and decided in favour of the latter †. The French took Mentz, by surprise, on the 21st of October 1792. They greatly strengthened the fortifications, and placed such a strong garrison in it, that, the next year, it stood a long and severe blockade and siege against the king of Prussia, to whom, however, it surrendered, at last, on the 23d of July 1793. Many of the churches, public buildings, and private houses, were destroyed, or greatly injured, during the siege, as well as the electoral country palace, and some fine villages, vineyards, and country houses. The French, in their turn, have, for some time, blockaded this city; but their operations seem suspended, for the present, in consequence of the treaty of peace which they have recently concluded with his Prussian majesty.

From Mentz, the Rhine pursues a westerly direction. Its whole course, in this part of the country, is very picturesque; the voyager being perpetually amused with a great variety of objects. Pleasant and well inhabited towns and villages; corn-fields, vineyards, and orchards; castles

* The Rhine: or, a Journey from Utrecht to Francfort, chiefly on the Borders of the Rhine, and the Passage down the River, from Mentz to Bonn: Described in a Series of Letters, written from Holland, to a Friend in England, in the Years 1791 and 1792, 2 vol. 8vo. † Vol. II. 140.

and religious houſes; country-ſeats and cottages, are intermixed in agreeable confuſion; and the broader ſurface of the river is beautified with iſlands of various extent. Advancing, however, the richneſs of the proſpect appears moſtly on the northern borders, many parts of the oppoſite ſhore being flat, ſandy, and barren. Near Elfeld, the country aſſumes a bolder aſpect, particularly on the northern ſhore. The mountains arrange themſelves by the ſide of the Rhine, which continues to keep its courſe toward the weſt. Ceres and Pomona here yield the territory to Bacchus. Elfeld is the principal town of the *Rheingau*, which ſignifies the diſtrict of the Rhine: its ſoil is chiefly devoted to the cultivation of the vine. The country on the eaſtern ſide of the hills is covered with a vaſt foreſt, named *Landes-wald*, or the Land's-foreſt. Dr. Cogan's animated deſcription of the remainder of his voyage till his arrival at Bingen, muſt be highly gratifying as a future companion in the boat. Indeed, two volumes in octavo will afford room to expatiate with an intereſting minuteneſs, which the limits of our miſcellany will not allow us to indulge.

We have obſerved, that from Mentz to Bingen, the *right* ſide of the Rhine excelled in the bounties of nature. At Bingen, the *left* ſhore aſſumes a more pleaſing aſpect: it even exceeds the other, for a great extent, in the number of large and reſpectable towns; nor is it inferior either in beauty or fertility.

At Bingen, a narrow defile of perpendicular rocks compels the Rhine to flow in a contracted and deeper channel. The country, in the ſouthern direction, though mountainous, is open, and occaſionally enlivened with hamlets, and the remains of ancient buildings; and where the ſoil is not adapted to the culture of the vine, it is clothed with various ſorts of grain, with rich paſturage, or with the trees of the foreſt.

Bingen is ſituated at the foot of a lofty mountain of a pyramidical form, cloſe by the rocks above mentioned. On the ſummit of this mountain, the ancient caſtle of Klopp aſſumes the air of guardian to the inhabitants below. The town enjoys a view of the luxuriant ſcenes that embelliſh the northern borders. It is alſo adjacent to the river Nahe, which flows into the Rhine ſouth of the antique caſtle: over this is thrown a ſtone bridge contiguous to the Rhine. This bridge bears the name of *Druſus*, from the tradition that it was built by Druſus Germanicus. At the entrance of that part of the Rhine, which flows between the perpendicular rocks, on a ſmall iſland, is a turret, which has the ſingular name of *Maus Thurm*, the Tower of Mice. *Tradition* accounts for this name by the ſtory of archbiſhop Hatton the ſecond, who, it is ſaid, not only refuſed to diſtribute corn among the populace, during a famine, but ordered a number of the poor to be burnt in a barn, as the moſt expeditious method of diminiſhing the demand; obſerving, that they were no other than *mice* that devoured the property of the rich; and for this cruelty, he was moſt completely devoured by mice. Others, however, leſs credulous, aſſert, that *Maus Thurm*, is a corruption of a word, that ſignifies the *Tower of Tollage*; and that it was erected, that no veſſel might enter the defile before they had paid the toll demanded. Bingen is a chapter of the cathedral of Mentz, from which it is diſtant about eighteen miles, and this chapter claims the right of tollage. From the union of the two rivers, Bingen enjoys a conſiderable trade in the productions of the adjacent country, chiefly timber, grain, and Rheniſh wines.

[To be concluded in our next.]

this defect will be fully ſupplied by thoſe of ſpring produce.—The coleſeeds branch freely for podding; but the quantity which ſurvived the winter, to ſtand for a crop, is very ſmall.—The fallows cannot fail to work kindly, and be in high, early tilth, where only tolerable huſbandry prevails.

Smithfield ſtill affords a very ſcanty ſupply of good meat.—Mutton of any age is hardly to be procured; and good beef is nearly as ſcarce. Some precaution ſhould be taken againſt the alarming diminution of our ſtock; for the high prices tempt the graſiers to force every thing to market a year before its regular courſe; and even the lambs, uſually ſtocked for wethers, or the flock, are now too generally ſwept off to ſupply the preſſing demands of the moment. The counties of Devon and Somerſet are nearly ſtripped of their old ſtock beaſts, by this premature ſlaughtering, and can only replace them by green ſteers. All this muſt be ſeverely felt hereafter.

The hop grounds, which eſcaped the floods of laſt winter, puſh out ſtrongly for bine; the prices, however, of fine ſamples, are on the ſtart.

The bark ſeaſon has been a productive one; the current price 4l. 10s. per load.

The cider counties of Hereford, Worceſter, Devon, &c. all ſtate a promiſing bloom.

The wool trade has had little or no variation ſince our laſt.

Live ſtock of every kind is ſcarce, and dear.

CHARACTER *of the late Sir* WILLIAM JONES: *Extracted from the Diſcourſe delivered at the Meeting of the* Aſiatic Society *in* Calcutta, *May* 22, 1794.

[By Sir John Shore, Bart. who ſucceeded Sir William in the Preſidency of that Society.]

I SHALL begin with mentioning his wonderful capacity for the acquiſition of languages, which has never been excelled. In Greek and Roman literature, his early proficiency was the ſubject of admiration and applauſe; and knowledge, of whatever nature, once obtained by him, was ever afterward progreſſive. The more elegant dialects of modern Europe, the French, the Spaniſh, and the Italian, he ſpoke, and wrote with the greateſt fluency and preciſion; and the German and Portugueſe were familiar to him.

At an early period of life his application to Oriental literature commenced; he ſtudied the Hebrew with eaſe and ſucceſs; and many of the moſt learned Aſiatics have the candour to avow, that his knowledge of Arabic and Perſian was as accurate and extenſive as their own: he was alſo converſant in the Turkiſh idiom; and the Chineſe had even attracted his notice ſo far as to induce him to learn the radical characters of that language, with a view, perhaps, to farther improvements. It was to be expected, after his arrival in India, that he would eagerly embrace the opportunity of making himſelf maſter of the Sanſcrit; and the moſt enlightened profeſſors of the doctrines of Brahma confeſs with pride, delight, and ſurpriſe, that his knowledge of their ſacred dialect was moſt critically correct and profound. The Pandits, who were in the habit of attending him, when I ſaw them after his death, at a public Durbar, could neither ſuppreſs their tears for his loſs, nor find terms to expreſs their admiration at the wonderful progreſs he had made in their ſciences.

Before the expiration of his twenty-ſecond year, he had completed his commentaries on the poetry of the Aſiatics, although a conſiderable time afterward elapſed before their publi-

REMARKS *on the State of the* AIR, VEGETATION, *&c.* April 1795.

2. VIOLETS in flower.—7. Peaches, nectarines, and apricots in bloſſom.—15. Almond tree in bloom, uſually out of flower toward the end of March.—22. Currants in full bloſſom. Aſparagus cut.—26. Scarlet ſtrawberries opening their bloſſom.—29. Pears, cherries, and plums begin to bloom.—30. Apricots nearly as large as a horſebean, and gooſeberries about the ſize of a common pea.—This month, in addition to its own diſplay, has exhibited the florulent beauties of March; but the bloſſoming ſeaſon is yet retarded by want of rain and genial warmth, there being a continuance of chilling winds toward the end.

Rain 52 hundredths of an inch.

OBSERVATIONS *on the* DISEASES *in* April 1795.

THE effects of the ſevere cold of the winter ſtill continued to be felt. Many who had ſurvived its more immediate influence, now became its victims from conſumptive complaints; the ſymptoms did not differ from what is uſual, except that the progreſs of the diſeaſe was more rapid than common. Smallpox in the mildeſt form ſtill continued to prevail, and the meaſles were occaſionally met with, but no other epidemic was noticed. In ſcrofulous habits, there was an enlargement of the glands (as is uſual at this ſeaſon) which had a tendency to inflame and ſuppurate.

MONTHLY REPORT *of the* BOARD *of* AGRICULTURE, *&c. for* April.

THE genial month of April, has fully compenſated for the ſeverities of a long winter. Vegetation was never more rapid in this climate, both in the winter and ſpring crops; from which an early, and productive harveſt may reaſonably be expected.

The wheats which have been well rolled, or harrowed, wear, through almoſt every diſtrict of the kingdom, a promiſing aſpect. They have branched, and ſtocked with uncommon vigour; and carry that colour, which, at this ſeaſon, is deemed the beſt criterion of future produce.

The old wheats of laſt year, from the beſt returns we can collect, are ſtill adequate to our conſumption. From this ſtock the various markets are receiving a gradual, which is certainly the moſt politic mode of ſupply; and in no inſtance do we find a diſpoſition in the farmers to keep back their corn with a view to higher prices. Reports of this kind having been miſchievouſly circulated, cannot too generally be contradicted, to prevent the public mind from being irritated by ſtatements ſo totally devoid of truth.

A ſupply of at leaſt 60,000 quarters of Canadian wheat is expected to arrive by Auguſt; eighty ſail of veſſels being chartered by government for the freight of this quantity from Quebec, now laying into his majeſty's ſtores there, at five ſhillings per buſhel.

The ſoft corn being generally got in well, has planted in all parts finely.—The very early-ſown beans and peaſe are found to have rotted in the ground; but the more regular ſowings are a full plant, and free from inſects.—The barley lands never worked better for the ſeed in Norfolk, the Eſſex roothings, and throughout the weſtern diſtrict. The oats are every where of equal promiſe.—The ſhowry weather has been favourable to the planting of young clovers, which begin to ſhow well.—The winter tares are almoſt univerſally cut off; but

tire, and elegant compoſition. A regard for the literary reputation of his country, induced him to tranſlate from a Perſian original, into French, the life of Nadir Shah, that it might not be carried out of England with a reflection, that no perſon had been found in the Britiſh dominions capable of tranſlating it. The ſtudents of Perſian literature muſt ever be grateful to him for a grammar of that language, in which he has ſhown the poſſibility of combining taſte and elegance with the preciſion of a grammarian; and every admirer of Arabic poetry muſt acknowledge his obligations to him for an Engliſh verſion of the ſeven celebrated poems, ſo well known by the name of Moallakat, from the diſtinction to which their excellence had intitled them, of being ſuſpended in the Temple of Mecca. I ſhould ſcarcely think it of importance to mention, that he did not diſdain the office of editor of a Sanſcrit and Perſian work, if it did not afford me an opportunity of adding, that the latter was publiſhed at his own expence, and was ſold for the benefit of inſolvent debtors. A ſimilar application was made of the produce of Sirajiyah.

Of his lighter productions, the elegant amuſements of his leiſure hours, comprehending hymns on the Hindu mythology, poems, conſiſting chiefly of tranſlations from the Aſiatic languages, and the verſion of Sacoontala, an ancient Indian drama, it would be unbecoming to ſpeak in a ſtyle of importance, which he did not himſelf annex to them.

The purſuits of our late preſident in Oriental literature, which from their extent might appear to have occupied all his time, neither precluded his attention to profeſſional ſtudies, nor to ſcience in general. Among his publications in Europe, in polite literature, excluſive of various compoſitions in proſe and verſe, I find a tranſlation of the ſpeeches of Iſæus, with a learned comment; and in law, an eſſay on the Law of Bailments. Upon the ſubject of this laſt work, I cannot deny myſelf the gratification of quoting the ſentiments of a celebrated hiſtorian: 'Sir William Jones has given an ingenious and rational eſſay on the Law of Bailments. He is, perhaps, the only lawyer equally converſant with the Year-books of Weſtminſter, the Commentaries of Ulpian, the Attic Pleadings of Iſæus, and the ſentences of Arabian and Perſian Cadhis.'

His profeſſional ſtudies did not commence before his twentieth year; and I have his own authority for aſſerting, that the firſt book of Engliſh juriſprudence which he ever ſtudied, was Forteſcue's Eſſay in Praiſe of the Laws of England.

Of the ability and conſcientious integrity with which he diſcharged the functions of a magiſtrate, and the duties of a judge of the ſupreme court of judicature in this ſettlement, the public voice and public regret bear ample and merited teſtimony.

His addreſſes to the jurors are not leſs diſtinguiſhed for philanthropy and liberality of ſentiment, than for juſt expoſitions of the law, perſpicuity, and elegance of diction; and his oratory was as captivating as his arguments were convincing.

In an epilogue to his Commentaries on Aſiatic poetry, he bids farewell to polite literature, without relinquiſhing his affection for it; and concludes with an intimation of his intention to ſtudy law, expreſſed in a wiſh, which we now know to have been prophetic.

Mihi ſit oro, non inutilis toga,
Nec indiſerta lingua, nec turpis manus!

I have already enumerated attainments and works, which, from their diverſity and extent, ſeem far beyond the capacity of the moſt enlarged minds; but the catalogue may yet be augmented. To a proficiency in the languages of Greece, Rome, and Aſia, he added the knowledge of the philoſophy of thoſe countries, and of every thing curious and valuable that has

een taught in them. The doctrines f the academy, the lyceum, or the ortico, were not more familiar to im than the tenets of the Veda, the ayſticiſm of the Suſis, or the religion f the ancient Perſians; and while, ith a kindred genius, he peruſed with apture the heroic, lyric, or moral ompoſitions of the moſt renowned oets of Greece, Rome, and Aſia, he ould turn with equal delight and nowledge to the ſublime ſpeculations nd mathematical calculations of Barow and Newton. With them alſo he profeſſed his conviction of the truth of the Chriſtian religion; and he juſtly deemed it no inconſiderable advantage that his reſearches had corroborated the multiplied evidence of revelation, by confirming the moſaic account of the primitive world.

There were, in truth, few ſciences in which he had not acquired conſiderable proficiency; in moſt, his knowledge was profound. The theory of muſic was familiar to him; nor had he neglected to make himſelf acquainted with the intereſting diſcoveries lately made in chymiſtry; and I have heard him aſſert, that his admiration of the ſtructure of the human frame had induced him to attend, for a ſeaſon, to a courſe of anatomical lectures, delivered by his friend the celebrated Hunter.

His laſt and favourite purſuit was the ſtudy of botany, which he originally began under the confinement of a ſevere and lingering diſorder, which, with moſt minds, would have proved a diſqualification from any application. It conſtituted the principal amuſement of his leiſure hours. In the arrangements of Linnæus, he diſcovered ſyſtem, truth, and ſcience, which never failed to captivate and engage his attention; and from the proofs which he has exhibited of his progreſs in botany, we may conclude that he would have extended the diſcoveries to that ſcience. The laſt compoſition which he read in this ſociety, was a deſcription of ſelect Indian plants; and I hope the executors will allow us to fulfil his intention of publiſhing it as a number in our Reſearches.

It cannot be deemed uſeleſs or ſuperfluous to enquire by what arts or method he was enabled to attain to a degree of knowledge almoſt univerſal, and apparently beyond the powers of man, during a life little exceeding forty-ſeven years.

The faculties of his mind, by nature vigorous, were improved by conſtant exerciſe; and his memory, by habitual practice, had acquired a capacity of retaining whatever had once been impreſſed upon it. To an unextinguiſhed ardour for univerſal knowledge, he joined a perſeverance in the purſuit of it, which ſubdued all obſtacles; his ſtudies began with the dawn, and during the intermiſſions of profeſſional duties, were continued throughout the day; reflection and meditation ſtrengthened and confirmed what induſtry and inveſtigation had accumulated.—It was a fixed principle with him, from which he never voluntarily deviated, not to be deterred by any difficulties that were ſurmountable, from proſecuting to a ſucceſsful termination what he had once deliberately undertaken.

But what appears to me more particularly to have enabled him to employ his talents ſo much to his own and the public advantage, was the regular allotment of his time, and a ſcrupulous adherence to the diſtribution which he had fixed; hence all his ſtudies were purſued without interruption or confuſion.

Of the private and ſocial virtues of our lamented preſident, our hearts are the beſt records. To you who knew him, it cannot be neceſſary for me to expatiate on the independence of his integrity, his humanity, probity, or benevolence, which every living creature participated; on the affability of his converſation and manners, or his modeſt, unaſſuming deportment: nor need I remark, that he was totally free from pedantry, as well as from arrogance and ſelf-ſufficiency;

tire, and elegant compoſition. A regard for the literary reputation of his country, induced him to tranſlate from a Perſian original, into French, the life of Nadir Shah, that it might not be carried out of England with a reflection, that no perſon had been found in the Britiſh dominions capable of tranſlating it. The ſtudents of Perſian literature muſt ever be grateful to him for a grammar of that language, in which he has ſhown the poſſibility of combining taſte and elegance with the preciſion of a grammarian; and every admirer of Arabic poetry muſt acknowledge his obligations to him for an Engliſh verſion of the ſeven celebrated poems, ſo well known by the name of Moallakat, from the diſtinction to which their excellence had intitled them, of being ſuſpended in the Temple of Mecca. I ſhould ſcarcely think it of importance to mention, that he did not diſdain the office of editor of a Sanſcrit and Perſian work, if it did not afford me an opportunity of adding, that the latter was publiſhed at his own expence, and was ſold for the benefit of inſolvent debtors. A ſimilar application was made of the produce of Sirajiyah.

Of his lighter productions, the elegant amuſements of his leiſure hours, comprehending hymns on the Hindu mythology, poems, conſiſting chiefly of tranſlations from the Aſiatic languages, and the verſion of Sacoontala, an ancient Indian drama, it would be unbecoming to ſpeak in a ſtyle of importance, which he did not himſelf annex to them.

The purſuits of our late preſident in Oriental literature, which from their extent might appear to have occupied all his time, neither precluded his attention to profeſſional ſtudies, nor to ſcience in general. Among his publications in Europe, in polite literature, excluſive of various compoſitions in proſe and verſe, I find a tranſlation of the ſpeeches of Iſæus, with a learned comment; and in law, an eſſay on the Law of Bailments. Upon the ſubject of this laſt work, I cannot deny myſelf the gratification of quoting the ſentiments of a celebrated hiſtorian: 'Sir William Jones has given an ingenious and rational eſſay on the Law of Bailments. He is, perhaps, the only lawyer [illegible] converſant with the Year-books of Weſtminſter, the Commentaries of Ulpian, the Attic Pleadings of Iſæus, and the ſentences of Arabian and Perſian Cadhis.'

His profeſſional ſtudies did not commence before his twentieth year, and I have his own authority for aſſerting, that the firſt book of Engliſh juriſprudence which he ever ſtudied was Forteſcue's Eſſay in Praiſe of the Laws of England.

Of the ability and conſcientious integrity with which he diſcharged the functions of a magiſtrate, and the duties of a judge of the ſupreme court of judicature in this ſettlement, the public voice and public regret bear ample and merited teſtimony.

His addreſſes to the jurors are no leſs diſtinguiſhed for philanthropy and liberality of ſentiment, than for juſt expoſitions of the law, perſpicuity and elegance of diction; and his oratory was as captivating as his arguments were convincing.

In an epilogue to his Commentaries on Aſiatic poetry, he bids farewell to polite literature, without relinquiſhing his affection for it; and concludes with an intimation of his intention to ſtudy law, expreſſed in a wiſh, which we now know to have been prophetic.

Mihi ſit oro, non inutilis toga,
Nec indiſerta lingua, nec turpis manus.

I have already enumerated attainments and works, which, from the diverſity and extent, ſeem far beyond the capacity of the moſt enlarged minds; but the catalogue may yet be augmented. To a proficiency in the languages of Greece, Rome, and Aſia he added the knowledge of the philoſophy of thoſe countries, and of every thing curious and valuable that has

been taught in them. The doctrines of the academy, the lyceum, or the portico, were not more familiar to him than the tenets of the Veda, the myſticiſm of the Suſis, or the religion of the ancient Perſians; and while, with a kindred genius, he peruſed with rapture the heroic, lyric, or moral compoſitions of the moſt renowned poets of Greece, Rome, and Aſia, he could turn with equal delight and knowledge to the ſublime ſpeculations and mathematical calculations of Barrow and Newton. With them alſo he profeſſed his conviction of the truth of the Chriſtian religion; and he juſtly deemed it no inconſiderable advantage that his reſearches had corroborated the multiplied evidence of revelation, by confirming the moſaic account of the primitive world.

There were, in truth, few ſciences in which he had not acquired conſiderable proficiency; in moſt, his knowledge was profound. The theory of muſic was familiar to him; nor had he neglected to make himſelf acquainted with the intereſting diſcoveries lately made in chymiſtry; and I have heard him aſſert, that his admiration of the ſtructure of the human frame had induced him to attend, for a ſeaſon, to a courſe of anatomical lectures, delivered by his friend the celebrated Hunter.

His laſt and favourite purſuit was the ſtudy of botany, which he originally began under the confinement of a ſevere and lingering diſorder, which, with moſt minds, would have proved a diſqualification from any application. It conſtituted the principal amuſement of his leiſure hours. In the arrangements of Linnæus, he diſcovered ſyſtem, truth, and ſcience, which never failed to captivate and engage his attention; and from the proofs which he has exhibited of his progreſs in botany, we may conclude that he would have extended the diſcoveries to that ſcience. The laſt compoſition which he read in this ſociety, was a deſcription of ſelect Indian plants; and I hope the executors will allow us to fulfil his intention of publiſhing it as a number in our Reſearches.

It cannot be deemed uſeleſs or ſuperfluous to enquire by what arts or method he was enabled to attain to a degree of knowledge almoſt univerſal, and apparently beyond the powers of man, during a life little exceeding forty-ſeven years.

The faculties of his mind, by nature vigorous, were improved by conſtant exerciſe; and his memory, by habitual practice, had acquired a capacity of retaining whatever had once been impreſſed upon it. To an unextinguiſhed ardour for univerſal knowledge, he joined a perſeverance in the purſuit of it, which ſubdued all obſtacles; his ſtudies began with the dawn, and during the intermiſſions of profeſſional duties, were continued throughout the day; reflection and meditation ſtrengthened and confirmed what induſtry and inveſtigation had accumulated.—It was a fixed principle with him, from which he never voluntarily deviated, not to be deterred by any difficulties that were ſurmountable, from proſecuting to a ſucceſsful termination what he had once deliberately undertaken.

But what appears to me more particularly to have enabled him to employ his talents ſo much to his own and the public advantage, was the regular allotment of his time, and a ſcrupulous adherence to the diſtribution which he had fixed; hence all his ſtudies were purſued without interruption or confuſion.

Of the private and ſocial virtues of our lamented preſident, our hearts are the beſt records. To you who knew him, it cannot be neceſſary for me to expatiate on the independence of his integrity, his humanity, probity, or benevolence, which every living creature participated; on the affability of his converſation and manners, or his modeſt, unaſſuming deportment: nor need I remark, that he was totally free from pedantry, as well as from arrogance and ſelf-ſufficiency;

which sometimes accompany and disgrace the greatest abilities. His presence was the delight of every society, which his conversation exhilarated and improved; and the public have not only to lament the loss of his talents and abilities, but that of his example.

Remarkable Instances of LUXURY *in the ancient* PERSIAN KINGS.

THE Persians were ever the most eminent of all mankind for luxury; their princes spent the winter at Susa, the summer at Ecbatanæ. According to Aristobulus and Chares, Susa received its name from the agreeableness of its situation: Susa in Greek means a lily. These monarchs spent their autumn at Persepolis, and the remainder of the year at Babylon. The very mark of distinction which the Persian princes wear around their brow, exhibits a proof of their voluptuousness. According to Dinon it is composed of myrrh and perfumed with labyzen, which is a delightful aromatic, and much more costly than myrrh. The same person writes, that when the king descends from his chariot, he does not leap to the ground, though the distance be as small as possible; neither does he rest upon any one's arms, but a footstool of gold * is raised to him, by help of which he alights: for this purpose the royal stoolbearer is always at hand. Heraclides of Cuma, in his first book of Persian History, thus writes; 'The king is constantly guarded by three hundred women, who sleep in the day, that they may watch during the night. During the night they sing and play, surrounded with a number of lights; with these the king has frequent communication by means of his Melophoroi. These last are chosen from his body guards, and are Persians by birth; they have golden apples at the end of their spears, are a thousand in number, and are selected on account of their valour from ten thousand, which the Persians call the immortal band. The king passes through the midst of these on foot, treading on the rich carpets of Sardis, upon which none but the sovereign is permitted to walk; when he comes to the first apartment he ascends his chariot, or occasionally mounts his horse, but he must never be seen without his purple on foot. When he goes to the chase he is accompanied by his concubines. The throne on which he sits to administer justice is of solid gold, supported by four columns which are of gold, and ornamented with precious stones, beneath which is spread a carpet of variegated purple.'

* Athenæus, in his sixth book, makes mention of some female slaves, first called Colabides, and afterward Climacides; whose office it was, to become as it were a stepladder to their mistresses when they ascend their chariots or mounted on horse-back.

Casaubon's note on this passage is also worth consulting. His words are these: 'Stantibus videlicet primis, secundis submissioribus tertiis magis ac quartis, postremis etiam genu nixis:' that is, the first of these Climacides stood erect, the second bent themselves a little, the third and fourth somewhat lower, the last rested on their knee. He goes on to speak of a description of female slaves in the island of Samos, who assisted great and noble ladies to get on horseback, 'dextrâ manu ad illarum lumbos admota.' Eustathius, after reciting the above words of Athenæus, adds, that in his time there were persons who made themselves steps for others to get on horseback. What he says may be seen at page 412, of the Commentary on the tenth Odyssey. The above may also serve to explain a passage in Gellius, in the fifteenth chapter of the tenth book, where we are informed, that the priestess of Jupiter might use stairs when she mounted her palfrey; in other words, steps.

The insolent Sapor, king of Persia, made this use of the emperor Valerian, whom he had vanquished and made prisoner. The fact is thus translated by Gibbon:

'We are told that Valerian in chains, but invested with the imperial purple, was exposed to the multitude a constant spectacle of fallen greatness, and that whenever the Persian monarch mounted on horseback, he placed his foot on the neck of a Roman emperor.'

ANECDOTES *of the* GOVERNMENT *of* England *and* Scotland, *from the Year* 1400 *to the Year* 1548.

[From Andrews' Hiſtory of Great Britain, Vol. I. Part II.]

IN the beginning of the fifteenth century, the power of each department of legiſlature became now more accurately defined, although no conſiderable alterations had been made in either.

The king's authority was moſt aſſuredly not in general deſpotic, ſince he could neither repeal nor change any law which had been made by conſent of his parliament. Yet that diſpenſing power which each monarch aſſumed, when it ſuited his purpoſe, threw far too great a weight into the ſcale of royalty. The ſovereign beſide retained the cruel right of giving in marriage the wards of the crown, although that prerogative (as well as that of purveyance) was exerciſed in a much more moderate degree than it had been of old.—*Forteſcue de Laudibus Legum Angliæ.*

He could likewiſe preſs for his ſervice not only ſoldiers and ſailors, but alſo muſicians, goldſmiths, embroiderers, and various ſorts of artificers.—*Ibid.*

The peers attended their duty in parliament at their own expence. The repreſentatives of the commons were always paid from the commencement of repreſentation. Toward the cloſe of the fourteenth century it was fixed 4s. per diem for knights of ſhires, and half that ſum for each burgeſs. We may reaſonably enough rate theſe ſums equal to ten times their value in modern times. Conſidering not only the weight of the ſilver but alſo the cheapneſs of proviſions and conveniences in the fifteenth century.

The ſheriffs' influence in returning members was extenſive and frequently abuſed. 'Sometimes they made no proper elections of knights, &c. ſometimes no return at all, and ſometimes they returned ſuch as had never been elected.'—*Preem. Stat.* 23 *H.* vi. *c.* 14.

For theſe and ſuch-like miſdemeanors he might be ſued by action at the aſſizes, and was liable to fine and impriſonment.

The qualification requiſite for knights of ſhires was 40l. per annum. It appears too that ſtrength of body and conſtitution was demanded, for the parliamentary writs about this period directed the electors to chooſe not only the wiſeſt but the ſtouteſt men (potentiores ad laborandum) that they might be able to endure the fatigue of the journey and of cloſe attendance.—*Pryne.*

Beſide their pay, the members of the houſe of commons had the privilege, for themſelves and their ſervants, of freedom from all arreſts. A neceſſary exemption, that they might be enabled to perform their duty. But this privilege (as well as their pay) attended on the members only during their actual ſervices, and quitted them at the end of each ſeſſion; allowing only for the few days which they might be obliged to employ in journeying to London and returning home.—*Ibid.*

The convocations were regularly ſummoned with the lay-parliaments and as regularly met. The prelates were ſtill directed to attend and 'conſult with the nobles.' They were alſo directed to order their dean and archdeacons to attend in perſon, each chapter to ſend one proctor, and the clergy of each dioceſe to ſend two proctors, 'to conſent to thoſe things which ſhould be ordained by the common council of the kingdom.' As therefore they were only to 'conſent,' not to 'conſult,' the proctors could ſcarcely be reckoned a part of the commons. They however received wages and partook of the privileges of parliament. The eccleſiaſtics ſtill continued to lay taxes on themſelves; but the conſent of the other branches of legiſ-

lature was neceſſary to give force to their decree.—*Prynne.*

Parliaments were often called and quickly diſmiſſed. They had frequently only one ſeſſion and once (in 1399) but a ſingle day. And in that one day depoſed one king (Richard II) and ſet up another.

No conſiderable alterations appeared in the Engliſh courts of law. The number of judges in the courts at Weſtminſter was by no means certain. Under Henry VI, there were at one time eight judges in the court of common-pleas. Each judge took a ſolemn oath that 'he would take no fee, penſion, gift, reward or bribe from any ſuitor, ſaving meat and drink, which ſhould be of no great value.'—*Forteſcue de Laudibus Legum Angliæ.*

The laws were ill-executed throughout * the fifteenth century. Maintenance (an union for ſiniſter purpoſes) ſtill prevailed; the prieſts by their exemptions were ſet above the law; ſanctuaries abounded throughout the realm and protected the vileſt criminal and the moſt diſhoneſt debtor; perjury throve and afforded a living to many; while the high conſtable, under colour of exerciſing military law, was authoriſed to proceed in caſes of treaſon, 'ſummarily and without noiſe or form of trial,' and if he wiſhed to give an appearance of juſtice to his proceedings, he could call in the aid of torture by fire or on the rack.

The account which the learned judge Hale gives of the lawyers, who pleaded in the fifteenth century does them little honour. He condemns the reports during the reigns of Henry IV and V, as inferior to thoſe of the laſt twelve years of Edward III; and he ſpeaks but coolly of thoſe which the reign of Henry VI produces.—*Hiſt. of Common Law, apud Henry.*

Yet this deficiency of progreſſive improvement in the common law aroſe not from a want of application to the ſcience; ſince we read in a very reſpectable treatiſe that there were no fewer than 2000 ſtudents attending on the inns of chancery and of court, in the time of its writer.—*Forteſcue de Laudibus, &c.*

The court of chancery ſeems to date its riſe at the cloſe of the fourteenth century. It was highly obnoxious to the profeſſors of the common law, who, by their intereſt in the houſe of commons, procured a petition againſt it from the parliament to Edward IV, in 1474. The influence of the prelates (who were certain of guiding that court) defeated this attempt, and its eſtabliſhment encountered no further difficulties.—*Cotton's Records.*

One obſervation there remains to make on the general ſtate of the Engliſh at this period. Civilization indeed had not hitherto made ſuch progreſs as entirely to aboliſh ſlavery. Yet few land-owners or renters were to be found who did not prefer the labour of freemen † to that of ſlaves.

* To Richard III, on whom hiſtory has caſt innumerable ſtains, England has conſiderable obligations as a legiſlator. Not to mention his cauſing each act of parliament to be written in Engliſh and to be printed, he was the firſt prince on the Engliſh throne who enabled the juſtices of the peace to take bail; and he cauſed to be enacted a law againſt raiſing money by 'Benevolence,' which, when pleaded by the citizens of London againſt cardinal Wolſey, could only be anſwered by an averment that 'Richard being an uſurper and a murderer of his nephews, the laws of ſo wicked a man ought not to be forced.'—*Barrington on Statutes.*

He was (ſays a noble biographer) a good lawgiver, 'for the eaſe and ſolace of the common people.'—*Bacon's Henry VII.*

† The value of freemen who would labour in agriculture was ſo well known, that ſtatutes were paſſed to prevent any perſon who had not twenty ſhillings a-year (equal to ten modern pounds) from breeding up his children to any other occupation than that of huſbandry. Nor could any one, who had been employed in ſuch work until twelve years of age, be permitted to turn himſelf to any other vocation.—*Public Acts.*

The condition of the ſlave in England was as completely wretched as the deſpot who owned him might pleaſe to make it. His goods were his maſter's, and, on that account, were free from taxation; and whatever injuries he might ſuſtain he had no power to ſue that maſter in any court of juſtice.—*Rym. Fœd. Prynne.*

This circumſtance diminiſhed their number, and the perpetual civil conteſts enfranchiſed many by putting arms in their hands. Within a few years after the acceſſion of the Tudors, ſlaves were heard of no more.

A reflection made at the cloſe of the fifteenth century, by Philip de Commines is the more remarkable as it is given voluntarily at the cloſe of the longeſt and moſt bloody civil war with which the Engliſh annals can be charged. 'In my opinion,' (ſays that judicious obſerver) 'of all the countries in Europe where I was ever acquainted, the government is no where ſo well managed, the people no where leſs obnoxious to violence and oppreſſion, nor their houſes leſs liable to the deſolations of war, than in England; for there the calamities fall only upon the authors.'

Scotland was not ſo happy. The unfortunate death of the Norwegian Margaret had involved that realm in a long and bloody conteſt with its powerful neighbour; and, although the gallant and free ſpirits of the Scots had preſerved the independence of their country notwithſtanding their inferiority in numbers, wealth and diſcipline, it could not prevent the preponderance of a moſt odious and tyrannic ariſtocracy. Perpetual domeſtic war looſened every tie of conſtitutional government; and a Douglas *, a Creighton, or a Donald † of the iſles, by turns exerciſed ſuch deſpotiſm and inhumanity as no monarch in the fifteenth century would have dared to practiſe.

The endeavours of the firſt and of the ſecond James were turned toward improving the juriſprudence of the north by engrafting on it the beſt parts of the Engliſh ſyſtem; but the ſuddenneſs of their deaths and the weak reign of their ſucceſſor James III, prevented their people from receiving much benefit from ſuch laudable deſigns.

The parliament of Scotland, at this period, had nearly monopolized all judicial authority. Three committees, were formed from the houſe (for there was only one) ſoon after the members met. The firſt, like the 'Triers in England, examined, approved or diſapproved of petitions to the ſenate; the ſecond conſtituted the higheſt court in all criminal proſecutions, as did the third in civil ones. And, as every lord of parliament who choſe it might claim his place in each of theſe committees, almoſt the whole adminiſtration of law, civil as well as military, reſided in the breaſt of the Scottiſh nobility.

There was another court, that of ſeſſion, of which the members and the duration were appointed by parliament.

The juſticiary (an officer diſcontinued in England as too potent) was ſtill nominally at the head of the Scottiſh law, and held courts which were ſtyled 'Juſticiaires,' as did the chamberlain 'Chamberlainaires;' from theſe courts there was allowed an appeal to a juriſdiction of great antiquity, ſtyled 'The Four Boroughs' Court.' This was formed of burgeſſes from Edinburgh and three other towns, who met at Haddington to judge on ſuch appeals.—*Pub. Acts.*

There was one abuſe, however, which rendered every court of juſtice nugatory. It had become a cuſtom for the Scottiſh monarchs to beſtow on their favourites not only eſtates,

* 'Oppreſſion, raviſhing of women, theft, ſacrilege, and all other kinds of miſchief, were but a dalliance. So that it was thought leiſom in a depender on a Douglas to ſlay or murder, for ſo fearful was their name, and ſo terrible to every innocent man, that when a miſchievous limmer was apprehended, if he alleged that he murdered and ſlew at a Douglas' command, no man durſt preſent him to juſtice.'—*Lindſay.*

† 'Donald (lord of the iſles) gathered a company of miſchievous, curſed limmers, and invaded the king in every airth, wherever he came, with great cruelty; neither ſparing old nor young; without regard to wives, old, feeble or decripped women; or young infants in the cradle, which would have moved a heart of ſtone to commiſeration. And burned villages, towns, and corns, &c.—*Ibid.*

but powers and privileges equal to their own. Thefe were ſtyled 'Lords of regalities;' they formed courts around them, had mimic officers of ſtate, and tried, executed or pardoned the greateſt criminals.

The good ſenſe of James II, prompted him to propoſe a remedy for this inordinate evil; but two admirable laws which he brought forward (the one againſt granting 'Regalities' without conſent of parliament, the other, to prohibit the beſtowing of hereditary dignities) were after his deceaſe neglected; and Scotland continued, two centuries longer, a prey to the jarring intereſts of turbulent, traitorous noblemen.

The reigns of the ſeventh and of eighth Henry brought to a period two ſtates, each totally inconſiſtent with good government and human felicity. That ariſtocracy which, at the ſame time that it kept the monarch in awe, oppreſſed the people and caught in an inſtant the fire of civil diſſention; and that bondage, which rendered the labourer and his family liable to be transferred, like the oxen on the farm, according to his owner's caprice.'

The power of the peers had been weakened by the deſtruction which the civil wars of the red and white roſe had brought on the ancient families. The ſeventh Henry ſhewed no inclination to repleniſh their phalanx. He even contrived, by the act againſt retainers, and by rendering the conveyance of landed property more eaſy, to leſſen the reſpectability of thoſe that remained. The numbers of the upper houſe were again diminiſhed by Henry VIII; who, on the diſſolution of monaſtic inſtitutions, deprived twenty-ſix abbots and two priors of their votes in that branch of the legiſlative ſyſtem.

Whether or no the meaſures of Henry VII, with reſpect to Ireland were juſt and prudent, thoſe who live in the eighteenth century are well qualified to judge. The great lines of his policy were theſe: by means of his governor, ſir Edward Poyning, he procured the parliament of that iſland to enact, firſt, 'That all *former* acts of the Engliſh parliament ſhould be binding in Ireland; and, 2d, That before any Iriſh parliament ſhould be holden, copies of the acts *propoſed to be paſſed*, ſhould be ſent over to England for the approbation of the king and council.'

As to ſlavery, the good ſenſe of the nation, and its conviction that the willing exertion of a freeman was of more value than the forced labour of a ſerf, had nearly emancipated the lower ranks of ſociety by the beginning of the ſixteenth century. Yet, a bill, meant at once to aboliſh this odious condition, which in 1526, was brought into the upper houſe, and was read three times in one day, had the ill fortune to be rejected; and the merit of this good work was left to reaſon, unaided by law *.

That Henry VIII took ſtill greater liberties than his father †, with the privileges and property of his ſubjects cannot be denied; and particularly during thoſe ſix years, when, diſpleaſed with the parſimony of his parliaments, he called none, but levied the neceſſary ſupplies by dint of prerogative and precedent. Shrinking with horror from the recollection of paſt miſeries, the Engliſh ſeem to have dreaded the renewal of a civil war, more than the worſt effects of deſpotiſm. Yet, in 1526, on a moſt illegal attempt to raiſe one fifth of the laity's goods, and one fourth of thoſe belonging to the clergy, the monarch found ſo ſtrong a ſpirit of oppoſition

* No treatiſes relating to law or government were publiſhed during the reign of Henry VII. But a celebrated book, written by one Marrow, on the office of a 'Juſtice of the Peace,' is often referred to by later writers, ſuch as Fitzherbert, Lambarde, &c. and is ſaid ſtill to exiſt in MS.—*Reeves on Engliſh Law.*

† Yet Henry VII, had erected the deſpotic court of the ſtar chamber; had renewed the practice of exacting benevolences, begun by Edward IV, and had purſued the path of Richard III in proſecuting, by 'Bill of Attainder,' thoſe whom otherwiſe he could not reach.

in the people, that he recalled his commissioners and dropped the project. Afterward, by managing the papal party and that of the reformation, by bestowing rich monastic forfeitures on men of power, and by the alternate use of menaces and soothings, he became so completely master of his parliaments, that (as he found nothing he could propose was too absurd for their approbation) he convoked them willingly, and dismissed them with reluctance.

The peers and the commons were indeed so entirely careless, as to the lives and liberties of the people, and consented to laws so perfectly contradictory to each other, that the observers of the one must inevitably fall under the censure of the other. As proofs of this axiom we need only recollect the statute which allowed to the proclamation of Henry the authority of laws *; that which in 1529, absolved him from paying his debts; or that most ludicrously-tyrannical act which denounced, that 'If the king or his successors should intend to marry any woman whom they took to be a pure and clean maid; if she, not being so, did not declare the same to the king, it would be high-treason; and all who knew it, and did not reveal it, were guilty of misprision of treason.' It is then only a widow that the king must address, said the scurrilous jesters of the age; and it did chance that Henry chose for his next new bride, the relict of the lord Latimer.—*Public Acts. Burnet.*

Nor could safety be insured by preserving a prudent silence; since whoever refused to answer on oath respecting the points in question, incurred the guilt of treason. In 1537, an act of parliament declared it treason to assert the validity of Henry's marriage with Catharine of Arragon, or Anne Boleyn. Within seven years a second statute made it equally treasonable to speak slanderously of the princesses Mary and Elisabeth, the issue of the above-named ladies. As both these contradictory acts were existing in force at the same period, a man could not have answered the simple question, 'Whether he thought those princesses lawfully born?' without exposing himself to the punishment of a traitor; and the same danger attended him if he stood mute.

When we add to this, the power of the star-chamber †, the insolence of courtiers ‡, (still harder to be borne

* Nine of the privy-council were to compose the court, which had power to punish offenders against such proclamations.

† The statute for the erection of this most despotic court, lord Bacon styles 'a good law.' It was composed of twenty-six members, chiefly the same as the privy-council. Sir T. Smith, in his 'Commonwealth of England,' advances in its defence, that it was useful to govern those who were too *stout* for the ordinary course of justice. It is said to have been instituted to curb the riots of disbanded soldiers, who were too often turned loose on the country without either pay or quarters.—*Barrington, &c.*

The fines of the star-chamber were so severe and interesting, that sometimes places were taken for the auditors by three in the morning. The title of the court is supposed to be derived from Starrum, a barbarous word for a Jewish contract; as business with the Jews had probably been transacted there.—*Ibid.*

‡ In Strype's life of Stow we find, a garden-house belonging to an honest citizen of London, (which chanced to obstruct the improvement of a powerful favourite, Thomas Cromwell) 'loosed from the foundation, borne on rollers, and replaced two and twenty feet within the garden,' without the owner's leave being required; nay, without his knowledge. The persons employed, being asked their authority for this extraordinary proceeding, made only this reply, 'That sir Thomas Cromwell had commanded them to do it,' *and none durst argue the matter.* The father of the antiquary Stow, (for it was he that was thus trampled upon) 'was fain to continue to pay his old rent, without any abatement, for his garden; though half of it was in this manner taken away.'

than the deſpotiſm of ſovereigns) and the vile adminiſtration of both civil and criminal law, through the known perjury of juries *; we muſt wonder at the extreme reſpect paid by contemporary hiſtorians to the government of England, as adminiſtered under the race of Owen Tudor.

It ſeems not improper to cloſe theſe obſervations with the words of a late judicious writer: 'In every regulation of a juridical nature made in this reign, we perceive a deciſive hand. The parliament ſeemed determined at once to reſolve all doubts, and to root out all difficulties, which, on former occaſions, they had been content to ſoften and palliate. Inſtead of continuing ſtill to aſcertain the boundary between the civil and ſpiritual juriſdiction by new deſcriptions, proviſion was made by ſtatute for correcting ſeveral irregularities wholly of a clerical nature; and for an entire reform of the eccleſiaſtical law. Inſtead of endeavouring to repreſs the luxuriancy of uſes by freſh ſtatutes againſt the pernors † of profits, it was intended to deſtroy the thing itſelf. The grand object of barring entails, which was accompliſhed at laſt by a recovery, was now ſubſtantiated by a parliamentary proviſion in favour of that mode of conveyance; and the conſtruction which had been entertained, with difference of opinion, reſpecting the like effect of the ſtatute of fines in the laſt reign, was now expreſsly eſtabliſhed by the ſame authority. The deviſe of lands, which had hitherto been practiſed under cover of a uſe, and had been partially allowed by a late act, was now by expreſs ſtatute indulged to every one. The benefit of clergy, which had ſo long ſtood in the way of our criminal judicature, was now aboliſhed in the principal and moſt common felonies.

'All theſe were innovations on the ancient law, which gave it a new turn, and brought theſe points under conſideration, in a variety of new appearances.

'To theſe may be added, the protection and eſtabliſhment of leaſes for years, execution againſt the effects of bankrupts, the limitation of actions, and the locality of trial in felonies.'—*Hiſt. of Engliſh Law.*

We muſt now attend to the juriſprudence of our ſiſter-nation, in which ſome advantage had certainly been

* To ſupport this harſh accuſation we have but too many proofs. 'Perjury,' (ſays a ſtatute 11 Henry VII. cap. 21.) 'is much and cuſtomarily within the city of London, among ſuch perſons as paſſen and been impanneiled in iſſue,' &c. The preambles of many acts recited the frequent perjuries of jurors as common, though pernicious events.

In the 'Dance of Death,' tranſlated from the French by John Lyngate, among the characters introduced to adapt it to the Engliſh reader, is a juryman who has often been bribed to give a falſe verdict. This ſhews that the offence was not unuſual.

Carew, in his account of Cornwall, avers, that it was common for attorneys to charge in their bills ſums 'pro amicitiâ vice comitis;' 'for the ſheriff's good-will,' &c. in packing juries.

The jurors of the capital were peculiarly abandoned. In 1468, Stow records the puniſhment and public diſgrace of many jurors: he adds, that at the time of his writing (the reign of Eliſabeth) their character continued the ſame. Fuller writes, that it is a common proverb, 'London juries hang half and ſave half.' Wolſey accuſed them of being capable of finding 'Abel guilty of the murder of Cain.' A ſtatute which puniſhes petty juries for falſe verdicts, ordains that half the grand jury (when a foreigner ſhall be tried) ſhall be ſtrangers and not Londoners; and laſtly, Ben Johnſon ſings, in his Magnetic Lady,

'And there is no London jury, but are led
In evidence, as far by common fame
As they are by preſent depoſition.'—*Barrington on Statutes, &c.*

† Law term for 'Receivers.'

gained to the cauſe of general ſecurity; although every obſtruction had occurred which ruinous foreign wars, and ſtill more deteſtable civil contentions, could cauſe.

About the beginning of the ſixteenth century, the parliament appointed juſtices and ſheriffs in Roſs, Caithneſs, the Orkneys, and the Weſtern iſles, where none had been before, and appointed courts to be held from time to time in theſe very remote diſtricts. There was need of this attention if the preamble to the act is to be credited, 'Through lack of juſtice-aires, juſtices and ſheriffs, by which the people are *almoſt become wild*.'—*Public Acts. James IV.*

James V, who could ſometime exert a juſt and proper ſpirit, ſailed in 1535, from Leith, and examined in perſon how far theſe wholeſome regulations had been put in practice. He ſeized and brought away ſome of the moſt turbulent chieftains, and inſpired the moſt ungovernable of his ſubjects with a decent reſpect for the laws *.

The parliaments were frequently and regularly called, particularly by James IV and V. Every thing which the nation could afford was granted by the houſe (for it was but ſingle, the ſcheme which James I. had planned of forming two chambers having unhappily miſcarried) and all poſſible care was taken by the houſe, that the king ſhould not alienate the demeſnes of the crown. In ſome inſtances, this branch of the legiſlature appears to have trenched upon the royal prerogative †, and even to have aſſumed the executive power.

It is certain (as has been remarked by a well-informed hiſtorian) that this mixture of liberality and of caution in the Scottiſh repreſentatives, at the ſame time that it maintained their kings in decent magnificence by the revenues of the crown lands, 'prevented the ſubjects from being harraſſed by loans, benevolences, and other oppreſſive arts, which were ſo often employed by the princes of Europe their contemporaries.' Yet, as the government had very ſeldom ſufficient ſtrength to guard the unarmed members of ſociety from aſſaſſination and pillage, arrayed under the banners of a factious nobleman, it may be doubted, whether the extortion and deſpotiſm of a ſeventh or an eighth Henry might not be more tolerable than the domeſtic tyranny ‡, and murderous ravages committed by the ſatellites of a Douglas, a Hume, a Sinclair, or a Hamilton.

* Juſtice was adminiſtered with great expedition, and too often with vindictive ſeverity. Originally the time of trial and execution was to be within 'three ſuns.' About the latter end of the ſeventeenth century, the period was extended to *nine* days after ſentence; but, ſince a rapid and unjuſt execution in a petty Scottiſh town, in 1720, the execution has been ordered to be deferred for forty days on the ſouth, and ſixty on the north ſide of the Tay, that time may be allowed for an application to the king for mercy.—*Pennant.*

† As in 1503, when an act was paſſed from prohibiting the king from pardoning thoſe convicted of wilful and premeditated murder; but this appears to have been done at the monarch's own requeſt, and was liable to be reſcinded at his pleaſure.—*James IV. Act.* 97.

‡ It appears that each great man had courts, held by power delegated from the crown, with 'ſoc, ſac ‖, pit, and gallows, toill and hame, infang thief and outfang thief;' he had power to 'hald courts for ſlauchter; and to doe juſtice upon ane man that is ſeiſed therwith in hand havand, or on back bearand.'

‖ Pit for drowning ſome offenders, particularly women.

The SPEECH *of his Excellency Sir* GILBERT ELLIOT, *Bart. Viceroy of Corſica, delivered to the Chamber of Parliament, at the Opening of the Seſſion, the 9th Day of February* 1795.

GENTLEMEN,

IT is with unfeigned pleaſure that I meet you this day in parliament, both becauſe your conſtitution, on which the future happineſs of Corſica depends, is hereby conſummated, and becauſe the full energy of your wiſdom and authority is required, at a period rendered doubly intereſting, by the eſtabliſhment of a new government, and by the continuance of the war.

You are charged not only with important, but arduous duties; ſince you muſt on the one hand ſecure your freedom as an independent nation, by a vigorous and courageous exertion in the war; and on the other, you muſt make proviſion for internal happineſs and liberty, by deliberations which are better ſuited to times of tranquillity and peace.

For the diſcharge of this great truſt, I rely with perfect confidence on the wiſdom and public ſpirit of parliament, ſupported by the zealous and hearty union of all good Corſicans, whether in public or private ſtations; for you will, no doubt, participate with me in the pleaſing reflection, that the preſent period affords the happy opportunity of compoſing paſt animoſities, and obliterating diviſions no longer ſupported by any ſubſiſting motive, and which being always at variance with the general good, are peculiarly prejudicial to it in moments like the preſent.

His majeſty, on his part, ever juſt and ever firm to his engagements, has already taken thoſe ſteps which the conſtitution pointed out, for completing the new ſyſtem of your government. He has been pleaſed to ratify in perſon, the conſtitutional act which he had previouſly authoriſed me to accept in his name.

I have ordered the gracious anſwer made by his majeſty to the addreſs of the late general council, preſented to him by deputies from that aſſembly, to be laid before you. I have alſo ordered to be laid before you, a copy of the commiſſion by which his majeſty has been pleaſed to confer on me the exalted honour of repreſenting him in this kingdom under the title of viceroy, agreeable to the proviſions of the conſtitutional act. By the choice of a perſon whoſe beſt qualification for that diſtinguiſhed ſtation, is a warm and ſteady affection for Corſica, you will perceive that the ſame ſentiment prevailed on that occaſion in his majeſty's mind.

I am enabled, with equal ſatisfaction, to acquaint you, that his majeſty is not leſs attentive to your protection againſt the hoſtile deſigns of the enemy; and you may depend on his powerful and vigorous ſupport during the war. He confides, at the ſame time, in the zeal and courage of his Corſican ſubjects, for repelling the enemy, and defending the independence of their country, and the ſecurity of their lives, fortunes, and honour, all that can be dear to men. In theſe views, a conſiderable body of Corſican infantry has been raiſed, and an immediate augmentation to that national corps is intended.

Meaſures have been taken for enabling his majeſty to aſſemble the militia, and employ them againſt the common enemy, in caſe of need. It will be for the parliament in its wiſdom, to frame adequate regulations for the perfection of ſuch a ſyſtem as may give to Corſica, in moments of danger, the full benefit of the courage and patriotiſm of all her ſubjects; for it muſt not be forgotten, that the independence and liberty of your country muſt not depend on the protection of regular troops alone, however formidable the force employed may be; but, under the providence of God, muſt ſtill reſt principally on the hearts and arms of a people who love their country and their freedom.

Many important objects will require your immediate attention. The moſt urgent of theſe is, to provide ſufficient funds for the public ſervice.

In the preſent circumſtances of Corſica, his majeſty is pleaſed to take upon himſelf the whole charges of the military eſtabliſhment; you have alſo the benefit of a great naval force, without any expence; you have no public debt, and conſequently no intereſt to pay on that account.

Reflecting on theſe peculiar advantages, enjoyed perhaps excluſively by this nation, I am perſuaded that you will cheerfully furniſh the remaining and unavoidable expences of the public ſervice; and it is with much comfort that I conſider the impoſſibility of an ample and adequate proviſion for the civil charges of government being burdenſome to the people of

Corſica, even in the preſent ſtate of her reſources.

A ſettlement of your religious eſtabliſhment has been reſerved for the chamber of parliament, in concert with his holineſs the pope.

To this important point you will naturally direct your early and ſerious attention; and I have no doubt, that the wiſdom and piety which will preſide in your councils, will lead you to the means of reconciling the civil intereſts and temporal proſperity of your conſtituents, with the holy duty of religion, the reverence due to its miniſters, and the ſacred rights of property.

The definition and limits of the ſeveral powers and juriſdictions to be exerciſed by the different tribunals, in the adminiſtration of juſtice, as well as a declaration of the law itſelf, are other points of ſerious and urgent importance. A faithful and judicious adminiſtration of the national property, particularly of the woods and forefts, the improvement of agriculture, manufactures, and commerce, the encouragement of induſtry in all its branches, the government and diſcipline of the military, the encouragement of navigation, and regulations which may bring forth the naval reſources of the iſland, whether in mariners or ſtores, in its own defence, and in the general ſervice of the empire; the repair of highways, and improvement of internal communication; inſtitutions for public inſtruction; eſtabliſhments of health; both for the ſecurity of the inhabitants, and the convenience of their commerce; all theſe are objects worthy of your early deliberations, and for which your wiſdom and diligence will not fail to provide.

I have the greateſt ſatisfaction in announcing to you the concluſion of a treaty for the marriage of his royal highneſs the prince of Wales with the princeſs Caroline, daughter of the duke of Brunſwick; I am perſuaded that your affection for the perſon and family of his majeſty will make you participate in the general joy diffuſed through every part of his dominions, by an event ſo intereſting to the happineſs of his majeſty and that illuſtrious prince.

Gentlemen;

Impreſſed with the momentous nature of the preſent period, and of the duties which it impoſes on us, I am nevertheleſs confident in your patriotiſm, talents, and application, and I pray God, ſo to bleſs and enlighten our councils, and ſo to endue us with wiſdom and virtue, as to render this firſt parliament of Corſica an example to all ſucceeding ones, as well as to your conſtituents of the preſent day; of diſintereſted, zealous, and above all, united exertion for the public good.

It is by theſe means, and by the bleſſing of God, that I truſt your country will triumph over its foreign and domeſtic enemies, and attain, under the mild and equitable government of his majeſty, the ſummit of national proſperity and happineſs.

PROCEEDINGS *of the Fifth* SESSION *of the Seventeenth Parliament of* Great Britain; *continued from Page* 304.

ON Tueſday, March 31, the earl of Guildford made a motion in the houſe of lords, ſimilar to that introduced by Mr. Fox, in the houſe of commons, for an inquiry into the ſtate of the nation. A debate enſued, which included the ſame topics, and the ſame arguments, that had been already ſo repeatedly under diſcuſſion. The motion was rejected by 104 againſt 34.

The next day, in the houſe of commons, Mr. Halhead, member for Lymington, roſe, to introduce the ſubject of Mr. Brothers, the perſon calling himſelf a prophet, and then in cuſtody of a meſſenger: *ſee page* 226. Mr. Halhead (whoſe great learning, particularly his ſkill in the oriental languages, with his character as an elegant writer, have excited ſome ſurpriſe that he ſhould ſeriouſly undertake to defend the reveries of this extraordinary man) after ſome prefatory obſervation, moved, that 'a copy of Mr. Brothers' books be laid on the table for the peruſal of the members.'—No perſon ſeconding the motion, it fell to the ground.

On the 14th of April, in the houſe of peers, earl Spencer moved the thanks of the houſe to vice-admiral Hotham for his brilliant ſervices, in the late ſplendid victory over the French fleet in the Mediterranean. This was voted, after ſome oppoſition from the earl of Lauderdale. A ſimilar vote of thanks then paſſed to admirals Goodall, ſir Hyde Parker, and Linzee, and to the officers, ſeamen, &c.

A monument in Weſtminſter abbey was voted to the memory of captain

Faulkner, who gallantly fell in the ſervice of his country, while engaging the Pique French frigate. *See page* 141.

On the 21ſt of April, Mr. Halhead again introduced the ſubject of Mr. Brothers. After expreſſing his ſurpriſe in not having been ſeconded in the motion which he made on the 31ſt of March, he thus proceeded: 'When a topic pregnant with religious alluſion, and profeſſedly (even if we ſuppoſe it miſtaken) founded on the grand baſis of Chriſtianity, claimed nothing more than a deliberate diſcuſſion, where were the promoters of the Sunday Reform Bill? When the cauſe of a ſuffering and perſecuted individual, preſſed on the notice of the houſe, where were the meritorious defenders of Muir and Palmer? When danger (however viſionary) was announced as threatening the parliament and this nation, where were the indefatigable detectors of the affiliated democratic ſocieties? When imputed inſanity was offered for conſideration, where were the invincible bulwarks that preſerved regal delirium from an intruſive regency?—Alas! alas! they muſt all have been ſick, or ſleeping, or peradventure on a journey.

He then proceeded to ſhew, that the conduct of Mr. Brothers was not connected with any conſpiracy; that he was not the founder or a member of any ſociety whatever; that he received company at his lodgings in the morning, where men of the firſt diſtinction might have been ſeen with ladies of the firſt faſhion; and that upon the whole his conduct was mild, temperate, and philanthropic. Of this diſpoſition, he ſaid, innumerable inſtances may be adduced from various parts of his works, but he confined himſelf to one, which was not in his opinion inferior to the fineſt paſſages left us in the works of Demoſthenes or Cicero, or any other of the moſt celebrated authors ancient or modern. He read this paſſage, which was a comment on the 27th verſe of the ſeventh chapter of Daniel; after which he thus proceeded:

'If medical pretenders, by reliance upon viſionary theories, or with a deep-laid plot of ſyſtematic villany, have conſpired to cry down a man's intellect, and rob him of his choiceſt inheritance—of his ſanity of underſtanding; let us expoſe their ignorance, or chaſtiſe their depravity, by effectual interference. All I wiſh is, to procure redreſs for an undeſerving ſufferer, as I deem him; or to gain ſome conviction of the juſtice of his ſuffering. That this is not an eaſy matter, attainable through any regular official channel, but that of the inquiſitorial authority of this houſe, I hope to make fully evident, and that relief muſt be prompt, if we mean it to be efficacious.

'The perſon in queſtion is ſuſpected as a traitor in the power of the ſecretary of ſtate. As a lunatic, he is immediately under the lord chancellor. If I apply to chancery, I muſt naturally expect to be told he was a ſtate priſoner, under warrant from government for treaſonable practices. If I refer to the ſecretary of ſtate's office, I ſhall have the ſame anſwer that was given to another friend of his, 'that he is not properly under that department; but as a lunatic is to be ſent to ſome hoſpital, where perhaps, by leave of the governor, I may be permitted to ſee him.' Between theſe two perſonages, while I am bandied about as a ſhuttlecock, Mr. Brothers may be transferred to a third or fourth department, whither all my induſtry may be exerted in vain to trace him. All I require, therefore, is to diſcover with preciſion, whether this Mr. Brothers be a traitor or a lunatic. He may poſſibly be either, but it is morally certain he cannot be both. I neither wiſh to palliate any crime he may have committed, nor to ſcreen him from any merited puniſhment of the law.

'Now, with reſpect to the documents which I move for, they cannot, I think, betray any ſecrets of ſtate: for if there exiſt a plot, of which the government wiſhed to explore the different ramifications before they promulgate their information, I think the verdict of lunacy is effectually done away. A conſpiracy, headed by a madman, can be no very tremendous object, nor, I think, his accomplices have been ſo long hid, when their chief was in confinement. If this ſuppoſed conſpiracy lay in his books, why, after the open warning I gave three weeks ago, has no ſtep been taken to impede their circulation? The examination before the privy-council, I am pretty well aſſured, may be publiſhed without any danger. All was politeneſs, candour, and good ſenſe, in that quarter; and though curioſity may be gratified by their publication, no new article would thence be added to the catalogue of treaſon.

'I now conclude, moſt earneſtly entreating gentlemen to conſider themſelves as repreſentatives of the whole Britiſh nation, to be meritoriouſly employed in redreſſing, where it may be poſſible, the ac-

cidental oppreſſions of any one Britiſh individual, however, obſcure; and I hope that a man who has creditably ſerved his king and country in the royal navy, the pride and bulwark of the Britiſh nation, will never appeal in vain to a Britiſh houſe of commons.

He then moved for a copy of the warrant from the ſecretary of ſtate, under which Mr. Brothers was apprehended; a copy of his examination before the privy-council; and a copy of the proceedings of the jury appointed to enquire into whether he was inſane or not.

He then obſerved, that if theſe papers ſhould be granted, he would move to-morrow, being an open day, for the houſe to reſolve itſelf into a committee upon them.

After putting the firſt motion, no member riſing to ſecond it, the whole affair of courſe dropped.

On Friday, April 14, in the houſe of lords, lord Walſingham having moved for the order of the day, earl Fitzwilliam roſe, and hoped their lordſhips would pardon him, if, before they proceeded to the order of the day, he ſolicited their attention to an object which he conceived to be of the greateſt general importance, and more peculiarly ſo to his feelings as an individual. He had lately the honour of repreſenting his majeſty in a kingdom the next in point of importance to that in which his majeſty reſides. From that ſituation he had been recalled in the middle of a moſt arduous and critical ſeſſions of parliament, and in the purſuit of meaſures, the beſt calculated, in his opinion, to promote the proſperity, and inſure the ſafety of that country. To be removed from a ſituation of ſuch truſt as that of chief governor of Ireland, at ſuch a time, and ſo ſuddenly, muſt naturally induce the public to ſuppoſe that his conduct had been blameable, indeed, to call for ſuch an unprecedented meaſure. He knew that his majeſty's miniſters in both houſes of parliament declared that no blame was imputable to them for any of the occurrences in Ireland. The natural inference from that declaration was, that he was the culpable party. That ſuch was the popular opinion he was convinced; nay, he knew, that, previouſly to his recall from Ireland, he was publicly accuſed in this town of having, by the raſhneſs of his conduct, endangered the ſafety of the empire. Placed in ſuch a ſituation, their lordſhips would naturally expect that he ſhould anxiouſly wiſh for a complete inveſtigation of the buſineſs. His majeſty's miniſters had thrown down the gauntlet; he would take it up; and he could now come proudly forward to refute the charges brought againſt him. Thoſe perſons who in his abſence accuſed him, would, he hoped, now he was preſent, come forward and ſupport their allegations. He relied upon the candour of his majeſty's miniſters for their chooſing the firſt open day for this diſcuſſion.

Lord Grenville ſaid, he felt the utmoſt anxiety at the manner in which the noble earl had thought proper to bring forward this ſubject. It by no means appeared to him an indiſputable inference, that becauſe a change had been made in the government of Ireland, blame muſt neceſſarily be imputed, either to the individual ſo removed, or to thoſe who had ſuggeſted the propriety of that removal. He would not enter into a diſcuſſion of what might have paſſed in another place, but he would venture to ſay, that in that houſe no attack had been made upon the noble earl by his majeſty's miniſters; they had merely defended themſelves. With this impreſſion, he certainly had no day to propoſe for a diſcuſſion of this ſubject.—If, therefore, unfortunately, the noble earl perſiſted in his intention, the manner of entering into the diſcuſſion, as well as the time, reſted entirely with his lordſhip.

Earl Fitzwilliam ſaid, he muſt perſiſt in calling for an inveſtigation: the public expected it, and his honour required it.—The noble ſecretary had ſaid, that no charge had been brought againſt him; but ſurely, if the miniſters had judged it expedient to recal him, it muſt have been becauſe they diſapproved of his meaſures: they would not have removed him from his government from any perſonal diſlike they might have to him, or any other trifling cauſe; they muſt have ſome very ſtrong grounds indeed for ſuch a meaſure. By the very fact of recalling at ſuch a critical period, they had indicted him; his duty was to refute the charge, which he was conſcious he was fully able to do. Could miniſters bring themſelves to believe that an inquiry would be called for upon this buſineſs, could they believe that the public would not eagerly expect it? Certainly not. He therefore again requeſted that a day would be fixed by his majeſty's miniſters for a full explanation of this ſubject.

Lord Moira agreed perfectly with the noble ſecretary of ſtate, that the ſimple fact of the recal of a lord lieutenant of

Ireland did not neceſſarily implicate either the perſon removed, or thoſe adviſing it, in any degree of blame; but the removal of one under all the circumſtances which attended that of the noble earl, muſt convey to the mind of every man an idea that the individual removed had conducted himſelf with impropriety.

The duke of Norfolk ſaid, he was much ſurpriſed at the manner in which this buſineſs was met by miniſters: he had expected that they would have come fairly forward, and would have been as anxious for inquiry as the noble earl. He therefore gave notice, that he ſhould move for a committee to inquire into this buſineſs on Thurſday next, and that the lords be ſummoned.

The ſame day, in the houſe of commons, Mr. Jekyl gave notice that he ſhould make a motion on the ſame ſubject.

On Monday, April 27, Mr. Pitt brought down the following meſſage from his majeſty:

'GEORGE REX.

'His majeſty relies on the liberality and affection of his faithful commons, and in the cordial intereſt which they have manifeſted in the happy event of the nuptials of the prince and princeſs of Wales, that they will be ready to concur in ſuch proviſion as they may judge neceſſary, to enable his majeſty to ſettle an eſtabliſhment for the prince and princeſs, ſuited to their rank and dignity.

'On an occaſion, in all other reſpects ſo ſatisfactory, his majeſty feels the deepeſt regret in being under the neceſſity of communicating to the houſe, that the benefit of any ſettlement to be now made, cannot be effectually ſecured to the prince of Wales, without providing the means of freeing him from incumbrances to a large amount, to which he is now ſubject.

'Anxious as his majeſty muſt neceſſarily be, particularly under the preſent circumſtance, to relieve the prince of Wales from theſe difficulties, his majeſty entertains no idea of propoſing to his parliament to make any proviſion for this object, otherwiſe than by the application of a part of the income which may be ſettled on the prince; but he earneſtly recommends it to the houſe, to conſider of the propriety of thus providing for the gradual diſcharge of theſe incumbrances, by appropriating and ſecuring for a given term, the revenues ariſing from the duchy of Cornwall, together with a proportion of the prince's other annual income; and his majeſty will be ready and deſirous to concur in any proviſions which the wiſdom of parliament may ſuggeſt, for the purpoſes of eſtabliſhing a regular and punctual order of payment, in the prince's future expenditure, and of guarding againſt the poſſibility of the prince being again involved in ſo painful and embarraſſing a ſituation.

G. R.'

After the ſpeaker had done reading the meſſage, Mr. Pitt moved, that his majeſty's meſſage be refered to a committee of the whole houſe.

Mr. Grey moved, that his majeſty's meſſage relative to the liquidation of the prince of Wales' debts, on the 22d of May 1787, and the addreſs of the commons to his majeſty in conſequence of ſuch meſſage, he now read; the ſame was read accordingly.

Mr. Stanley ſaid, that he felt the neceſſity there was that the buſineſs now before the houſe ſhould undergo a minute diſcuſſion. It was of ſuch a nature, that whenever it came to be fully conſidered, it ought to be in as full a houſe as poſſible. He therefore would wiſh that a call of the houſe ſhould take place on this day fortnight for that purpoſe.

The ſpeaker ſuggeſted, that the hon. member would with more propriety propoſe a call of the houſe when his majeſty's meſſage came to be conſidered in the committee.

The chancellor of the exchequer hoped that the hon. member would not propoſe a call of the houſe, as he did not ſee that it would be productive of any good effect.

Mr. Grey expreſſed his approbation of the call of the houſe propoſed by Mr. Stanley. A more important circumſtance could not occur, nor one that demanded more ſerious and minute diſcuſſion, as a ſecond application was made, after a ſolemn aſſurance had been given to the houſe that nothing ſimilar ſhould again happen. The mode propoſed for the liquidation of the debts he thought inadequate; under whatever denomination the buſineſs was brought forward, it was ſtill but a ſcheme for that purpoſe. Confuſion, therefore, ought as much as poſſible to be avoided, and it ought to be ſpecifically known what the amount of the debts was. The mode, in his opinion, was objectionable. Parliament was called on to pay a debt which rumour ſtated to be immenſe, and they could not be too circumſpect in deciding on the nature of it, and the plan of its liquidation. When the cries of the ſtarving poor were every where heard, the beſt part

tion of human nature, believe that this will always be the case where encouragement is offered; and that the same instances of ability and genius do exist, but latently, in nations where no such rewards present themselves, and where a superiority in genius, if not dangerous, would at least be *useless*. The force of this latter remark arises from the well-known fact, that no barbarous nation has ever civilized itself: external means have always been employed. The progress of civil society may be thus traced from the earliest records, and over the whole globe.

These reflections lead to some important conclusions. If so few of mankind are destined to excel, and to be useful in eminent natural or acquired abilities, to do good to others, and to be known to posterity; and if even these finish their course here, long before they have attained a very inconsiderable proportion of that knowledge of which the human mind is capable, and if the mind (which we almost always perceive to be the case) be as whole and *capable* at the hour of death as at the most vigorous period of life, are we not led to suppose that there is a state of *being* after this life, wherein our knowledge shall attain to perfection, and wherein those minds which have been inert here, shall attain their full exercise? Independently of all other proofs of the immortality of the soul, this surely may be allowed to have its weight. Nature has made nothing in vain. It does not appear reasonable that so many myriads of human beings should have been created, in the image of their Maker, merely to live, and admire a few hundreds of their fellow-creatures, who, by certain adventitious circumstances, have attained a superiority over them in intellectual power and usefulness.

The same conclusion will result, if we take into the account, what we know from revelation of the general design of Providence in the creation of man. The particular process we are ignorant of; but that the good of man was intended, is undeniable. Nor can we ever lose ourselves in speculations on this subject (I mean, on the apparent inequality of the condition of man) if we consider that his Maker is a Being of Supreme Wisdom and Goodness, and that the beauty and order of the creation are not the less objects of admiration because we cannot fully comprehend them; because beings, finite in their natures and faculties here, cannot comprehend the designs of a Being infinite and omniscient.

Still less ought we to repine because we may not be of the number of the favoured few, who are distinguished by the applause and respect of mankind. It is a distinction not always enviable, and seldom acquired even by those who have considered it rather as the object of ambition than the reward of merit. It is in every person's power, by a regular discharge of the duties of common life to acquire *esteem* which will render his situation comfortable, and to cultivate principles which will render him truly happy. More than this he *may* attain, but more than this is not in the common lot even of the most deserving, and therefore not to be expected by a wise, nor desired by a good man.

C. H.

Interesting Anecdotes.

[From 'Anecdotes of some distinguished Persons, chiefly of the present and two preceding Centuries,' 2 vol. Crown 8vo.]

Queen Mary.

It appears, by the 'Account of the Death of Queen Mary, written by a Minister of State,' that a letter of her's to king William, dissuading him from continuing to keep a Mrs. Villers as his mistress, was found in her strong box, to be delivered to her husband when she was dead. The character of queen Mary, written by

John Jervis, it would not be eaſy to bring him to concur in any imputations on their characters, to feel leſs pleaſure when he contemplated the trophies they had ſent home to their country, or to deſire to pull from their brows the laurels they had ſo gloriouſly won. When miniſters had anſwered the memorial alluded to by the hon. gentleman, (Mr. Manning) they had anſwered hypothetically, they had anſwered on a ſuppoſition that all the facts ſtated were true—but they had ſince learned that the moſt flagrant of them were falſe. If the hon. gentleman had heard that any thing contrary to the laws of war had been committed by our forces in the Weſt Indies, he had been ill informed. It was true that the object of the expedition commanded by ſir Charles Grey and ſir John Jervis had been, to invite the French Weſt India iſlands to put themſelves under our protection. But this they had not thought proper to do. Every inch of Martinico had been diſputed, and they had not been taken by any repreſentation of the advantages they would derive from becoming our colonies, but by conqueſt. In the taking of every one of them there had been enough of conqueſt to juſtify the rights of war in their fulleſt extent, whatever they might be. From this circumſtance there muſt have exiſted a certain right of booty, and our troops muſt have entertained a juſt expectation of having their valour rewarded. In fact, the proclamations of the commanders were the means of exerciſing lenity, not ſeverity. This inveſtigation might require the evidence of ſeveral material officers, who, if not gone, are preparing to go into the ſervice of their country. To detain them would be prejudicial to the public on that account. We were now in the beginning of May, when all the members of the houſe, who ſerved in the army, navy, or militia, would be called into action, and it would be highly inconvenient to diſcuſs this ſubject in their abſence.

He would never agree to publiſh any poſitive reſolutions with regard to the rights of conqueſt. It would be impoſſible to frame any propoſition on the ſubject to ſuit all caſes and circumſtances. Complaints were now before our courts of equity relative to ſir Charles Grey's proclamations; and the houſe would ſurely not enter into an enquiry to prejudicate queſtions pending in competent tribunals. So far were the inhabitants of Martinico from being diſpleaſed with the conduct of ſir Charles Grey, that the aſſembly of that iſland voted him a ſervice of plate and a ſword. As to what had ſince happened in St. Vincent's and Grenada, it had not the leaſt connection with the proclamations. He conſented to produce them, entering a proteſt againſt farther proceedings.

Mr. Fox roſe to expreſs his approbation of the general propriety of enquiries into the conduct of commanders in chief, and miniſters of ſtate, who might be entruſted with the conduct of great national enterprizes. Such inveſtigations were abſolutely requiſite, both for their own honour and that of the community, which they had been called upon to ſerve, whenever any fair ground of enquiry had been eſtabliſhed. Feeling moſt fully the truth of theſe obſervations, he acknowledged he was under no inconſiderable degree of embarraſſment as to the vote he ought to give upon this occaſion. Upon the whole, however, he was perſuaded that it was previouſly required to ſpecify ſome good reaſons on which the houſe could with propriety act; and as no ſuch reaſons had been ſtated in this inſtance, he thought that no proper motion could be made on this ſubject. The grounds of the motion, and of the obſervations which had been rather irregularly made upon it, were two; firſt, the opinion which the hon. gentleman ſeemed to entertain on the law of nations; and in the next place, the ſtatement which he had been pleaſed to make of the tranſactions in the Weſt Indies in the courſe of the campaign of 1793.—As to the firſt point, he muſt contend, that whether it was abſtractedly right or wrong, it had been certainly laid down as a leading principle of the law of nations, that the love of booty might be fairly employed as an incentive to the minds of ſoldiers in the due execution of what they were called upon to perform; and if this was admitted, he could not ſee that the confiſcation of property attendant upon it was at all inconſiſtent with the general principles on which independent ſtates, involved in hoſtilities, acted with regard to each other. The proclamations in queſtion only pledged the commanders in chief to the performance of certain engagements, in caſe certain ſtipulations were fulfilled; and, of courſe, if theſe were not complied with, the conditions under which the proclamations had been iſſued were null and void. This, therefore, brought the inquiry to a mere queſtion of fact, it being contended on the one hand, that articles of capitulation had been groſsly violated; and on the other, that nothing more than the juſt law

of war had been exercised toward those who, by their persevering resistance, had wilfully brought them upon themselves. Now, adverting to the public documents of these officers, and the private communications of many others who had served upon the station, he had no hesitation in saying, that none of the general principles on which wars had been carried on had been infringed; and that the conduct of the noble commanders in question was consequently irreproachable. The danger of retaliation on the part of the enemy, in consequence of the atrocities imputed to these gentlemen, had been likewise urged as a reason for instituting an inquiry into their conduct; but where no similarity of circumstances existed, it was unfair to argue that the same consequences would ensue. Was it to be conceived for a moment, that any act of any British commander could justify or extenuate the cruelties committed by Hughes and the French under him, or that the resolution for seizing the property of the adherents to the convention could be contrasted with that of exterminating the supporters of king George throughout the West India islands? While he thus thought that no beneficial effect whatever could result to the movers of this inquiry, whether in reference to the general principles of the law of nations, or to the particular facts which appeared likely to be disclosed, he at the same time thought, that, for the satisfaction of the noble commanders themselves, the papers now called for should be produced, and he therefore would accede to that motion.

Mr. Pitt shortly observed, that any discussion relative to the conduct of the gentlemen in question was at least irrevelant, if not disorderly, upon this occasion. We were now called upon to decide whether it would be proper to produce the papers in question, and he should only say, that, as their production was not likely to be attended with any material injury to any branch of the measures of the executive government, he certainly would acquiesce in it.

Sir W. Yonge declared, that the state of West India property would be entirely insecure, not only upon these occasions, but upon every occasion of future hostility, if the spirit of these proclamations was allowed to operate.

Mr. Grey expressed his satisfaction that so many other gentlemen in that house, of whose ability and character no doubt could be entertained, had delivered their opinions before he thought himself called upon to do so. He stated the awkward predicament in which he stood pledged, at the same time to give his sanction to the motion for papers now to be disposed of, and at the same period called upon, by every tie of gratitude and affection, to give an immediate answer to the calumnies which, for so many months, had been poured upon those officers. He then went into a detail of the various operations performed in the French West India islands, in order to shew that they were reduced by force; he contended, that the obnoxious parts of the proclamations had never been carried into effect; and concluded by moving for a copy of the memorial of sir Charles Grey and sir John Jervis, delivered to the duke of Portland, in answer to the memorial of the West India merchants.

The motions for the various papers were put and carried, with the exception of the opinions given by the crown lawyers on this subject.

[To be continued.]

THE THEATRE.

ON Thursday, April 24, was performed, for the first time, at Covent-garden theatre, a new Farce, interspersed with songs, called the IRISH MIMIC, or BLUNDERS at BRIGHTON, from the prolific pen of Mr. O'Keeffe.

The most prominent features of originality in this trifle are, the blundering imitations of Mr. Parrot, an Irish Mimic, and on the whimsicality of this character rests chiefly the business of two long acts, which took up near two hours in representation. There are also two ladies, of the name of Malcolm, an aunt and a niece; the one courted by an old gentleman, Mr. Cyprus, and the other by captain Clifford, an officer. The latter gentleman is rendered unhappy by the supposition that the young lady to whom he pays his addresses carries on a correspondence with Cyprus, which error he is led into, from her bearing the same name as her aunt, who is the object of the old gentleman's choice. An explanation at length take place; the captain receives the hand of the young Julia; but the old lady, miss Peggy, discards her enfeebled lover, and embraces the Irish Mimic. On the servant of miss Peggy, who is the bearer of her love letters to Cyprus, depends a considerable share of the comicality of the scene.

The intention of the author is evidently

to raiſe a laugh, and, although at the expence of all manner of probability, he undoubtedly has ſucceeded ſo far.

On Saturday, May 2, was preſented, at the ſame theatre, a new comedy, written by Mr. Holcroft, and entitled THE DESERTED DAUGHTER. This drama comes under the deſcription of what the French call *Comedie Larmoyante*, and though it is by no means without merriment, the general deſign is to touch the feelings, and to leave a moral impreſſion on the heart. Altogether it rather bears the character of a dramatic novel, than of a comedy, at leaſt according to the notion of comedy derived from the extravagant productions of late years.

The principal character, Mordaunt, is a miſanthrope, who is eternally exclaiming againſt the evils of life, but who has brought himſelf to the brink of ruin by too lavith an enjoyment of its pleaſures. He poſſeſſes the beſt and moſt affectionate of wives, yet treats her with neglect, and hardly ever ſpeaks kindly to her. His daughter, by a firſt wife, he abandons, and will not even ſee. Relying upon an unprincipled ſteward, he is nearly ruined, but ſaved by the integrity of that ſteward's nephew, who gets poſſeſſion of his uncle's papers, and gives them at a critical moment to Mordaunt.

In the courſe of the piece Johanna, the deſerted daughter, is entrapped into a brothel by the profligate miſtreſs of it, and Mordaunt is in danger of being the pandar to the ruin of his own daughter, by one of his intimate friends. At laſt, wrung to the bitterest agony by the ills which his diſſipation, libertiniſm, and want of conjugal and parental affection bring upon him, he renounces his errors, and, notwithſtanding his obſtinate perſuaſion of the univerſal miſery of mankind, is diſpoſed, by the virtues of the perſons who ſurround him, to admit that happineſs may find a place even in this ſublunary ſtate of things.

The play was received throughout with very great applauſe, and announced for a ſecond repreſentation with univerſal approbation.

On Wedneſday, May 6, was performed, for the firſt time, at Drury-lane theatre, a new Opera, called JACK OF NEWBURY, written by Mr. Hook, jun. The muſic is by his father.

The incident ſprings from an affair at the battle of Flodden Field, and may be found in the legends of Henry VIII.—ſhewing that Jack of Newbury did more than his duty, and was fortunate enough to have his ſupererogation remarked and rewarded by his ſovereign and his miſtreſs. Dame Eleanor, who has three ſuitors, prefers Jack to them all, and places him at an entertainment, where there is a 'place reſerved,' for the huſband of her choice.

The ſcenery and decorations of this new piece are very elegant: to it was attached a maſque in honour of the late marriage of the princeſs of Wales.

On Tueſday, May 12, was performed, for the firſt time, at the ſame theatre, a new comedy, written by Mr. Cumberland, and entitled FIRST LOVE. The characters are as follows:

Lord Senſitive, Mr. Wroughton; ſir Miles Mowbray, Mr. King; Frederick Mowbray, Mr. Palmer; David Mowbray, Mr. Bannifter, jun. Mr. Wrangle, Mr. R Palmer; Mr. Butler, Mr. Suett. Lady Ruby, Miſs Farren; Mrs. Wrangle, Miſs Pope; mademoiſelle Rolet, Mrs. Jordan.

The outline of the plot is as follows:

Frederick Mowbray's firſt love was devoted to an amiable young lady, but oppoſed by his father ſir Miles Mowbray, who contrives an artifice to ſeparate them, ſends his ſon to Italy, and intercepts all the letters addreſſed by the latter to his miſtreſs during the time he was abroad.—Conceiving that her lover was unfaithful, the lady marries the rich ſir Paul Ruby, and becomes a very wealthy widow juſt at the time when Frederick returns to this country. During his reſidence at Padua, Frederick falls dangerouſly ill, but is recovered by the endearing attentions of mademoiſelle Rolet; a French emigrant, whoſe parents were maſſacred in France. Senſible of her kindneſs, and pitying her forlorn ſtate, Frederick ſolemnly promiſes to marry this Sabina Rolet on their arrival in England. Meeting his brother David accidentally, Frederick by his aſſiſtance procures the fair emigrant an aſylum in the houſe of Mr. Butler, a navy agent. While Sabina is in the houſe, lady Ruby calls, in order to appoint Buttler her banker, and luckily enters a room in which ſhe finds Frederick and Sabina. It ſoon appears that Frederick retains his firſt love for lady Ruby, though he determines to fulfil his grateful engagements with the unfortunate Sabina.

Lord Senſitive, ſuitor to lady Ruby, has, it appears, paſſed through the ceremony of marriage at Padua, with Sabina Rolet, but having gratified his wiſhes, he cruelly abandons her. Sabina ſecretly re-

ſolves not to profit by the generous offers of Frederick, and more particularly on perceiving the ſtrong attachment that prevails between him and lady Ruby. After ſeveral interviews between lord Senſitive and lady Ruby, in which the latter ſtings him to the heart with alluſions to his conduct toward poor Sabina, he relents, and determines immediately to ſet off for Italy in order to do her juſtice, but is agreeably ſurpriſed in finding her under the roof with lady Ruby, and he then, with every appearance of contrition for his perfidy, and of tranſport in regaining her, acknowledges her as his wife. Lady Ruby, of courſe, is united with her firſt beloved Frederick, both confeſſing that their firſt love continues in unabated force.

There is an epiſodical part relative to Mr. and Mrs. Wrangle, the latter of whom is the daughter of ſir Miles Mowbray, who forces her to marry a man not the choice of her heart. The general moral is, that parents ſhould never croſs the dictates of a firſt love, as it is the genuine effuſion of innocence and ſimplicity, and promiſes, more than any other circumſtance, to ſecure conjugal felicity.

The comedy was well received throughout, and announced for a ſecond repreſentation with univerſal and reiterated applauſe.

THE BRITISH MUSE.

ADDRESS TO SUMMER.

By Miſs ANNA MARIA PORTER.

COME, blue-ey'd daughter of the bright-hair'd ſun!
And with fleet footſteps chaſe the loitering ſpring
Acroſs the wide fields of the radiant ſky;
Come in thy varied robe of ruſſet green,
Thy naked boſom ſwelling on the air,
To catch a cooling kiſs from love-ſick gales;
Thy bluſh'd cheek ſhaded by a lucid veil
Form'd of ſuch clouds as on the blue vault float,
When with a deſpot's ſtate, hot noon-day reigns:
Thy roſy lips breathing all Hybla's balm,
And ſhining in the beaming light of day;
Thine eyes of living fire, diſſolving cloied
In ſoft voluptuous languiſhment, and each
Cerulean orb, ſwimming in brilliant dew;
While o'er thy bloomy neck, and ſhoulders bare,
Wild fly thy treſſes clad in radiant gold!
Come, with thy graceful form all looſe array'd
In robes more fine, than dark Arachne's woof,
Or filmy goſſamer, or ſiſken flower!
Come, and with all thy baſhful-bluſhing beams,
Weave the rich mantle of reſplendent June!
Unfold the glowing bloſſoms of the roſe,
And caſt the woodbine's rich ambroſia round!
Wake all the air to melody, and ſhed
Thro' every bower, romantic dell or glade,
The muſky balm, the nectar of thy breath--
Ah, in thy reign, how ſweet the breezy wood,
The ſhady bank dew-dropping, and the ſound
Of bickering waters, and of ſoft caſcades!
How ſweet the wild thyme on the boundleſs downs,
And drowſy humming of the woodland bee!
How ſweet the evening walk beneath the lime,
The beech umbrageous, and the poplar pale,
To taſte the humid honey of the flowers;
To catch the fanning of the weſt-wind's wing,
To view bright Venus ope her ſilver eye,
And glimmer thro' the foliage of the trees!
Ye often taſted pleaſures! How my ſoul
Beats, burns, and trembles for thoſe joys again--
O! haſte then, lovely ſeaſon, ſpeed the hours,
Which on the laughing ſpring attendant wait,
And roll o'er radiant clouds, thy blazing car!--
But, oh! if in thy train thou doſt not bring
Thoſe who before gave all yon proſpect's charms,
Lent fragrance to the ſhrubs, and clothed the earth
In one wide bluſh of ſweetly mingling hues,
Then come not near me, but in pilgrim's weeds,
Quench all the bloom, that gilds thy virgin cheek,
And turn its warm tints to a paler dye;
Be pale and joyleſs, hide thy ſunny eyes
In tears dejected, and with leaden foot,
Slow tread the cheerleſs earth: I want no flowers,
No cooling breezes, nor no evening walks,
If thoſe I love ſhare not the bliſs with me!

May 1795.

VERSES, occaſioned by the Flight of a LINNET, which had been ſinging on the Top of a Beech, at the Foot of which the Author was reclined.

SAY, tuneful bird, that o'er my head,
Sequeſter'd in the lonely bow'r,
Thy wildly warbling note didſt pour,
Ah! why ſo ſoon capricious fled?
Here I could loiter hours away,
On ſpringing vi'lets laid along,
Nor grudge to waſte the vernal day,
In liſt'ning only to thy ſong.

Sweet fugitive! devoid of fear,
Renew with ſpeed thy welcome ſtrain,
Return, ah! ſoon return again,
Nor fancy hidden dangers here:
On miſchief bent, unfeeling boys,
Theſe ſacred haunts ne'er dare invade,
Nor vex with loud diſcordant noiſe,
The lonely unfrequented ſhade.

Ah! why this long-protracted ſtay?
Does ſome gay wanton's call of love,
Allure thy errant flight, to rove
Thro' devious woodlands far away?
Deaf to the ſyren's artful voice,
Return, ah! ſoon return again;
Bid theſe dull ſcenes again rejoice,
And ſing once more thy cheerful ſtrain.

Sweet fugitive! thy ſong is o'er!
I hear no longer trembling float
The wildly-free extatic note,
And the ſtill grove now charms no more:
A tranſient hour, may thus impart
The raptur'd bliſs we dearly prize,
But ſcarcely can it reach the heart,
Before the ſhort-liv'd tranſport dies.

EUSEBIUS.

DIDO: AN ELEGY.

NOW Evening reigns ſerene around,
And peaceful ſilence ſoftly ſleeps;
The ſweet moon 'wakes with ſilv'ry garlands crown'd,
And ſcares each miſt that o'er her ſurface creeps:
Aetherial beauty all the ſcene o'erſpread,
And forms celeſtial the pure ether tread.

Now, while ſweet harmony each object cheers,
All nature wears the ſmile of ſoothing peace;
Me, only me! pale haggard miſery tears,
Dido alone ſhall mourn and never ceaſe!
Ye ſeas, whoſe murmurs rock the ſilent ſhore,
My groans ſhall echo to your wavy roar!

Hark, from yon bower the feeling bird of eve,
Pours her ſweet notes, and ſeems to mourn her fate;
Ah! ſolitary bird, doſt thou too grieve?
Doſt thou too mourn unheard thy abſent mate?

Ye ſwelling waves, my Eneas yield?
So ſhall my wounded heart once more be heal'd.
O, all ye gods—who gave the chief his fame,
Let not the widow'd mourner weep in vain.

PROLOGUE

To the DESERTED DAUGHTER.
Spoken by Mr. HARLEY.

FRUITFUL in good and ill, the teeming earth
To wheat and tares affords promiſcuous birth:
At once, from nature's womb, riſe woe and weal;
The ſprings that poiſon, and the ſtreams that heal.
Nay more, her offspring each and all contain,
Within themſelves, both antidote and bane.
Each is a jarring world, where death yields life;
And concord riſes out of endleſs ſtrife.
Each ſeems diſtinct, yet all together bound:
And ſeparate and collectively is found
A hoard of infinite; a countleſs maſs
Of miracles within a blade of graſs.
First of the tribe, and maſter of the whole,
Man ſtands erect; the ſovereign and the ſoul.
In him all union and diſunion ſhine:
He's now above half brute; now more than half divine.
Wayward in humour; infinite in wit;
The ſlave of all, to none will he ſubmit;
In act an idiot; in conceit a ſage;
Mov'd by a breath, he'll brave the tempeſt's rage;
Now ſoar, a demi-god; now ſink, a ſtraw;
Now weep, a child; now give the planets law.
Railing at wretchedneſs, in folly wiſe,
Alive to all the bliſs that he denies,
Worthy your laughter or perhaps your tears,
Brain-ſick of errors paſt, to night appears
A moody mortal; ſketch'd on this mad plan;
A ſurly miſanthrope, and yet a man.

Within his orbit other beings move;
Some urg'd by av'rice, others ſpurr'd by love,
To aid or injure him, as paſſion drives;
The worſt of ſervants; and the beſt of wives:
With many more, all waiting here within;
My taſk being ended,—ready to begin.
Hear, and decide, like men who think and feel:
For, from this night's decree, there's no appeal.

EPILOGUE to the SAME.

Spoken by Mrs. POPE, Miſs WALLIS, and Mrs. MATTOCKS, coming forward.

Mrs. POPE.

AND now, thrice gentle friends, our plotting ended,
We hope you're pleas'd—at leaſt, not much offended?
Surely, you'll own it was a little moving,
To ſee a modern wife ſo very loving!
Who deems the marriage vow a thing expedient!
And is at once meek! faithful! and obedient!
Such whims were common in the golden age:
And ſtill they may be met with—on the ſtage:
But grant they now are falſe, paſt contradiction,
We hope they yet may be endur'd—in fiction.

Miſs WALLIS.

You've heard that good queen Beſs had maids of honour;
Whoſe courtly trade it was to wait upon her;
To quaff brown ſtout, yet not be overtaken,
Breakfaſt on beef, and ſup on eggs and bacon?
In thoſe ſtrange days, I can't ſay what might happen!
Virtue might, then, be thought the woman's weapon!
But daughters now like me, whate'er we feign,
No where exiſt; but in a poet's brain!
Such blunders are too groſs! No ſoul can brook 'em!
And yet I wiſh, for once, you'd overlook 'em.

Mrs. MATTOCKS.

Poor man! He's mad! An heir of one and twenty,
With frolics, freaks, and pounds and paſſions plenty,
Who, being told where he may purchaſe beauty,
Begins to cant of conſcience, love, and duty?
Was ſuch ſtuff ever heard? Ye ſprigs of faſhion,
Say, is it thus you treat the tender paſſion?
'Ere ſuch ſhall be the picture of our youth,
Earthquakes ſhall come, and prophets ſhall ſpeak truth!
Yet, put him not in poet's purgatory;
For, ſhould you damn him, we ſhall all be ſorry.

Miſs WALLIS.

Then be ſweet temper'd!

Mrs. MATTOCKS.

Grant the man his cauſe!

Mrs. POPE.

And once more make us bleſt in your applauſe.

An Account of the TRIAL *of the Rev.* WILLIAM JACKSON, *for* HIGH TREASON, *April* 23, *at the Bar of the Court of King's Bench, Dublin, and of his ſubſequent Death, on the* 30*th of the ſame Month.*

THE indictment charged the priſoner with two ſpecies of treaſon, namely, compaſſing the king's death, and adhering to his enemies, and ſtated 14 overt acts.

The attorney-general opened the proſecution on the part of the crown, and proceeded to ſubſtantiate the charges laid in the indictment; for which purpoſe he called

Mr. Cockayne, an attorney of London, who depoſed, that he had been for years the law-agent and intimate friend of Mr. Jackſon, who, a few years ago, went to France (as the witneſs underſtood, to tranſact ſome private buſineſs for Mr. Pitt) where he reſided a conſiderable time. Soon after his return, Mr. Cockayne ſaid he called on him, and told him, in confidence, that he had formed a deſign of going to Ireland to ſound the people, for the purpoſe of procuring a ſupply of proviſions, &c. for the French, and requeſted him (the witneſs) to accompany him. Having accepted the invitation, he immediately waited on Mr. Pitt, and diſcovered to him the whole of Mr. Jackſon's plans.

this defect will be fully ſupplied by thoſe of ſpring produce.—The coleſeeds branch freely for podding; but the quantity which ſurvived the winter, to ſtand for a crop, is very ſmall. —The fallows cannot fail to work kindly, and be in high, early tilth, where only tolerable huſbandry prevails.

Smithfield ſtill affords a very ſcanty ſupply of good meat.—Mutton of any age is hardly to be procured; and good beef is nearly as ſcarce. Some precaution ſhould be taken againſt the alarming diminution of our ſtock; for the high prices tempt the graſiers to force every thing to market a year before its regular courſe; and even the lambs, uſually ſtocked for wethers, or the flock, are now too generally ſwept off to ſupply the preſſing demands of the moment. The counties of Devon and Somerſet are nearly ſtripped of their old ſtock beaſts, by this premature ſlaughtering, and can only replace them by green ſteers. All this muſt be ſeverely felt hereafter.

The hop grounds, which eſcaped the floods of laſt winter, puſh out ſtrongly for bine; the prices, however, of fine ſamples, are on the ſtart.

The bark ſeaſon has been a productive one; the current price 4l. 10s. per load.

The cider counties of Hereford, Worceſter, Devon, &c. all ſtate a promiſing bloom.

The wool trade has had little or no variation ſince our laſt.

Live ſtock of every kind is ſcarce, and dear.

CHARACTER *of the late Sir* WILLIAM JONES: *Extracted from the Diſcourſe delivered at the Meeting of the* Aſiatic Society *in* Calcutta, *May* 22, 1794.

[By Sir John Shore, Bart. who ſucceeded Sir William in the Preſidency of that Society.]

I SHALL begin with mentioning his wonderful capacity for the acquiſition of languages, which has never been excelled. In Greek and Roman literature, his early proficiency was the ſubject of admiration and applauſe; and knowledge, of whatever nature, once obtained by him, was ever afterward progreſſive. The more elegant dialects of modern Europe, the French, the Spaniſh, and the Italian, he ſpoke, and wrote with the greateſt fluency and preciſion; and the German and Portugueſe were familiar to him.

At an early period of life his application to Oriental literature commenced; he ſtudied the Hebrew with eaſe and ſucceſs; and many of the moſt learned Aſiatics have the candour to avow, that his knowledge of Arabic and Perſian was as accurate and extenſive as their own: he was alſo converſant in the Turkiſh idiom; and the Chineſe had even attracted his notice ſo far as to induce him to learn the radical characters of that language, with a view, perhaps, to farther improvements. It was to be expected, after his arrival in India, that he would eagerly embrace the opportunity of making himſelf maſter of the Sanſcrit; and the moſt enlightened profeſſors of the doctrines of Brahma confeſs with pride, delight, and ſurpriſe, that his knowledge of their ſacred dialect was moſt critically correct and profound. The Pandits, who were in the habit of attending him, when I ſaw them after his death, at a public Durbar, could neither ſuppreſs their tears for his loſs, nor find terms to expreſs their admiration at the wonderful progreſs he had made in their ſciences.

Before the expiration of his twenty-ſecond year, he had completed his commentaries on the poetry of the Aſiatics, although a conſiderable time afterward elapſed before their publi-

tea for his breakfaſt, which he ſaid always diſagreed with him. He informed the witneſs that he roſe at three o'clock, from miſtaking the time, and fearing to delay the court.

The witneſs accompanied him in a carriage from Newgate to the four courts. He vomited ſeveral times, and a frothy fluid iſſued from his mouth, which he removed with his handkerchief. He expreſſed great uneaſineſs at the curioſity of the populace to ſee him in the carriage.

Surgeons Hume and Adrien having opened the body in the preſence of the jury, and inſpected the interior coats of the ſtomach, were next examined: they depoſed, that an inflammation of the ſtomach, occaſioned by the irritation of ſome acrid matter, was the cauſe of his death.

Counſellor Powell, who attended on the part of the heir at law, ſtated to the jury two points for their conſideration:—Firſt, whether it had been fully aſcertained that Mr. Jackſon had been poiſoned? In his opinion it had not; but if the jury held a contrary opinion, they were then to determine how, or by whom the poiſon had been adminiſtered? He had heard it rumoured, that Mr. Jackſon intended to give information of high crimes and miſdemeanors againſt perſons in the city of Dublin: ſuch perſons might be ſuſpected of adminiſtering the poiſon (if it was adminiſtered) for their own ſafety; but there was not the leaſt cauſe of ſuſpicion, that a man of his fortitude would be guilty of an act of ſuicide.

The jury withdrew, and after a ſhort deliberation returned the following verdict: 'We find that the Rev. William Jackſon died on the 30th of April, of ſome acrid and mortal ſubſtance taken into his ſtomach, but how or by whom adminiſtered, is to us unknown.'

On the 2d of May, his remains were carried from the undertaker's, in Maylane, in a hearſe, accompanied by twelve coaches, to the cemetery of St. Michan's, and there decently interred.

By the death of Mr. Jackſon, before ſentence was pronounced, his property, which it was ſaid amounted to about 200l. a year, will be preſerved to his family, and not eſcheat to the crown, as it would otherwiſe have done.

FROM THE LONDON GAZETTES.

The London Gazette, April 28.

Admiralty-Office, April 28.

Extract of a Letter from Captain Sir J. B. Warren, Bart. of his Majeſty's Ship La Pomone, dated off Falmouth, April 24, to Evan Nepean, Eſq.

UNTIL the 15th inſtant, nothing material occurred; when a ſail having been diſcovered in the NE, the Iſle de Rhé bearing ENE five leagues, I made the ſignal for a general chaſe; and at half paſt eight, A. M. the Artois brought her to. She proved to be Le jean Bart, ſhip-corvette, of 26 guns and 187 men.

On the 16th, having ſeen ſeveral ſail ahead, gave chaſe with the ſquadron; and at four P. M. Belleiſle bearing N, eight leagues diſtant, came up with the rear of a convoy. A corvette brig, paſſing us to leeward, exchanged a few ſhot, which carried away her ſtudding-ſails. Finding it impracticable to purſue her, ſhe running cloſe in ſhore, I ſtood after the reſt, and at five, P. M. brought-to a brig and a ſloop, which, being in ballaſt, were ſet on fire. The Galatea alſo, after exchanging a few ſhot, brought-to a ſhip-corvette a-head, which proved to be L'Expedition, of 16 guns and 120 men, formerly a packet in our ſervice.

The Artois alſo captured two ſloops laden with fiſh. The reſt of the convoy, with a frigate, ſtanding in between the rocks, for Hedie and Quiberon-bay, eſcaped.

Extract of a Letter from the ſame, dated April 25.

IN addition to the liſt of veſſels taken and deſtroyed by the ſquadron under my command, captain Nagle, of the Artois, acquaints me that, on the evening we fell in with the laſt convoy off Belleiſle, he chaſed a ſhip and brig upon the rocks near the iſland of Hedie, and that they were loſt thereon.

The London Gazette, May 9.

Admiralty-Office, May 9.

Extract of a Letter from Captain James Cotes, late of his Majeſty's ſhip Thames, dated Giſors, April 9, 1795, to the Secretary of the Admiralty.

Thurſday, October 24, 1793, lat. 47 2 N, lon. 7 22 W, ſtanding upon a wind to the ſouthward, the wind at WSW at

half paſt nine o'clock, A. M. ſaw a ſail bearing ſouth; ſhe hoiſted a blue flag at the foretop-maſt-head, as a ſignal to a brig, (as I ſuppoſe) that accompanied her, and then bore away before the wind. It came on very thick; upon its clearing up, at a quarter paſt ten o'clock, we perceived ſhe had hauled her wind, and made ſail for us; cleared ſhip; at half paſt ten o'clock ſhe fired a gun to windward, and hoiſted French national colours. We were ſoon cloſe, paſſing on contrary tacks; ſhe fired her bow guns, and then a broadſide, when ſhe wore, and an action commenced, which continued until twenty minutes paſt two, P. M. when the ſhip (which proved to be a French frigate) hauled off to the ſouthward, making all the ſail ſhe could, but unfortunately leaving us in a condition unable to follow her.

All our maſts and bowſprit were ſhot through in a number of places, all our ſtays entirely ſhot away, all the main rigging ſhot away, and was hanging by the ratlins, except two ſhrouds on one ſide, and three on the other; but, on examination, the eyes of theſe were ſhot away above the top. The main top-maſt rigging was ſtill more damaged, and the maſt ſhot through in three places. The main topſail yard was ſhot away in the ſlings by a double-headed ſhot, and the yard arms came down before the main yard, the lifts, braces, &c. being all ſhot away; the ſlings, both iron and rope, beſide the geers of the main-yard, were ſhot away; the yard hung by the truſſes, about a third maſt down; the main ſail was cut to pieces, particularly the leech ropes. The fore maſt had received nearly the ſame damage as the main maſt, with this difference, that the ſlings of the fore-yard were not all cut away, ſo that the yard remained aloft; the fore-top-maſt rigging, except one ſhroud on one ſide, and two on the other, was all ſhot away, with all the ſtays, back-ſtays, lifts, braces, tyes, haulyards, &c. the bowſprit ſhot through in ſeveral places, all the bob-ſtays and bowſprit ſhrouds were cut by ſhot and langrage; the jib ſtay and haulyards were cut away the firſt broadſide. The mizen-maſt was ſo wounded, and the rigging ſo cut to pieces, that I was obliged to lower the gaff after the action, to prevent the maſts going over the ſide; the fore part of the top was entirely ſhot away. I cannot pretend to enumerate the ſhot that was received in the hull; moſt part of the gangways were ſhot away, the main-deck before the main maſt was torn up from the waterway to the hatchways, the bits were ſhot away and unſhipped, ſix ſhot between wind and water on the ſtarboard, and three on the larboard ſide; in ſhort, when the enemy made ſail, the ſhip was perfectly unmanageable, two guns on the main deck and one on the quarter-deck were diſmounted, almoſt all the tackle and breechings were carried away; in this ſituation I was obliged to put before the wind, to prevent the maſts going over the ſide, as it began to freſhen from the WSW.

While we were thus employed, three ſail (large frigates) appeared, making all the ſail they could, under Engliſh colours; it was impoſſible for me to alter our poſition, not being able to haul upon a wind, all our after ſail being ſhot away, and the runners being carried forward, were croſſed to ſerve both as ſtays and ſhrouds, and the ſhips had ſeparated to prevent any ſuch manœuvre. Fearing they might be enemies, as I thought they were, I called the remaining officers together, and aſked them, that if they ſhould prove enemies, whether it would anſwer any purpoſe engaging in the ſituation we were in; they were all of opinion that to engage with ſuch a ſuperiority of force could anſwer no other than the deſtruction of the remaining crew, and that we were cut off from all poſſibility of an eſcape; in this ſituation were we when the headmoſt paſſed us at a conſiderable diſtance (ſtill under Engliſh colours) as if to reconnoitre our diſabled ſtate; ſhortly after ſhe wore, and came under our ſtern, and gave us a broadſide. Perceiving it was his intention to engage us in that manner, ſeeing us entirely deprived of the means of altering our courſe, I judged it neceſſary to bring to, and inform him, as the ſhip had already engaged, we were incapable of further reſiſtance, and conſequently had yielded to their ſuperior force. He deſired us to ſend our boat; I told him it was impoſſible, as they were all unfit to be put in the water, and if they were, we were unable to hoiſt them out; he, in conſequence, ſent his on board of us, during which time the diſpatches, together with all papers and letters that were on board, were ſunk.

Thus, ſir, has fallen into the hands of the enemy his majeſty's ſhip Thames under my command; but I truſt a court-martial will convince their lordſhips and the country at large, that, although the misfortune has taken place, it was not until every exertion was found to be of no further avail.

The ſhip, after ſome of her crew was

ſent on board the Carmagnole, was taken in tow by her, and we anchored in Breſt-road the day following.

Encloſed I forward a liſt of the killed and wounded, for their lordſhips information *.

The London Gazette, May 16.

Extract of a Letter from Capt. Sir Richard Strachan, of his Majeſty's Ship Melampus, dated Grouville-Bay, Jerſey, May 11, 1795, to Evan Nepean, Eſq. Secretary of the Admiralty.

I have the honour to acquaint you, for their lordſhips information, that ſir Sydney Smith, with the ſhips under his command, joined me on the 8th inſt. at noon. About three o'clock in the morning of the 9th, we diſcovered thirteen ſail coming from the northward along ſhore. I made the ſignal to weigh; the ſquadron weighed and gave chace, the wind being off the land, and the enemy's veſſels running along ſhore to the ſouthward. About ſix o'clock, the Melampus got near enough to fire upon the headmoſt veſſels, but they all, except a cutter, which eſcaped round Cape Carteret, (our gun-boats not being arrived at the rendezvous) got cloſe in ſhore, under a ſmall battery, protected by their armed veſſels, a brig and lugger. I made the ſignal for the boats to aſſemble on board this ſhip for the purpoſe of boarding them, and worked the Melampus in to cover the attack, ſoon followed by the other ſhips as they came up, firing upon the enemy's battery and gun-veſſels in ſucceſſion. The enemy ſoon abandoned their veſſels, and the boats of the ſquadron boarded and got them all off, except one ſmall ſloop, which was burnt, the tide having left her. About this time the battery ceaſed to fire. I beg to take this opportunity to acknowledge the aſſiſtance I have received from the zeal and activity of the captains under my direction upon all occaſions, and particularly upon the preſent; and alſo to obſerve, that the manner in which the lieutenants of the different ſhips boarded and brought off the veſſels of the enemy does them infinite honour as officers, the firſt lieutenant of the Melampus bearing a conſpicuous part; and the boats crews and different ſhips companies acted with their uſual courage.

The accompanying is a liſt of the killed and wounded on board the different ſhips, and alſo a liſt of the veſſels of war and convoy taken. I have the honour to be, ſir, your moſt obedient ſervant,

R. J. STRACHAN.

Return of Killed and Wounded.

Melampus.—One petty officer, and ſeven ſeamen, wounded.

Diamond.—Two ſeamen, wounded.

Hebe.—Mr. John Leggatt, ſurgeon, and two ſeamen, wounded.

Niger.—Mr. Long, ſecond lieutenant, and one ſeaman, wounded.

Syren.—Mr. John M'Guffock, midſhipman, and one marine, killed; and two ſeamen, wounded.

Liſt of Veſſels and Priſoners taken.

One gun brig; 3 guns, 18 pounders.

One gun lugger; 3 guns, 18 pounders.—Had three men remaining on board.

Liſt of the Convoy.

	Tons Burthen.	Cargo.
La Proſperité,	80	Cordage.
La Montagne,	200	Timber, lead and tin-plates.
La Catharine,	200	Ship timber.
L'Hirondelle,	220	Ship timber and pitch.
La Contente,	250	Powder.
La Nymphe,	120	Wood and firing.
La Bonne Union,	150	
La Fantazie,	45	Coals.
L'Alexandre,	397	Ship timber cordage, hemp and cannon.
La Sutit Neptune,	113	Ship timber.

The London Gazette, May 23.

Horſe-guards, May 23. A diſpatch, of which the following is an extract, has been received from lieutenant-general David Dundas, by his royal highneſs the duke of York, and tranſmitted by his royal highneſs to the right hon. Henry Dundas, one of his majeſty's principal ſecretaries of ſtate.

Diepholtz, May 9, 1795. We have juſt heard that the Auſtrians have been ſucceſsful, though not without the loſs of 600 or 700 men, in driving the French from the poſt of Mombach, near Mayence, and on the heights; before which place they will eſtabliſh part of their army.

* Nine ſeamen, one marine, killed; and the ſecond lieutenant, maſter, maſter's mate, quarter gunner, a midſhipman, and thirteen ſeamen, and five mariues, wounded.

COMMENCEMENT *of the* CAMPAIGN *on the* RHINE.

Mentz, April 30.

A Bloody action has taken place in our vicinity. With a view of clearing the Hartenberg, and to erect new redoubts on it, a ſortie was reſolved on this day, when, at half paſt four in the morning, the ſignal was given; the attack was made on our ſide, and two redoubts of the enemy were attempted to be carried. The fight was obſtinate on both ſides; the enemy could not reſiſt our troops, and retreated as far as the foreſt of Mombach, with the loſs of two pieces of cannon, and two powder magazines.

At noon the French returned with a reinforcement, and began ſtorming a counterſcarp, erected the day before yeſterday, but they were received by a well directed fire of cartouches in ſo furious a manner, that thoſe who did not fall by the fire were inſtantly cut to pieces or made priſoners by our cavalry. The firing of cannon and howitzers from the field of Ingolheim upon the redoubt of Mombach, continued very briſkly till late at night. Many priſoners have been brought in; and ſome deſerters ſay, that the enemy eſtimates their loſs at 2000 men. On our part the imperial regiment of Vilebeck, the companies of grenadiers belonging to the elector of Mayence and thoſe of Warardine, have ſuffered moſt.

Frankfort, May 2. The details, which we have received relative to the action before Mentz, on the 30th ult. ſtate, that the imperial troops carried a double row of entrenchments upon the Hardenberg, notwithſtanding the very obſtinate reſiſtance of the French, who were driven as far as the wood of Mombach. The great ſmoke that was obſerved there afforded us ſome reaſon to ſuppoſe that the village of Mombach had been ſet fire to; but it proceeded from the wood, where the action was renewed with great obſtinacy. The attack of the imperialiſts was well ſeconded by the batteries of the iſle of Ingolheim, which played upon the French intrenchments in front of the village.

The object of the garriſon of Mentz, which was to clear the Hardenberg in order to throw up entrenchments there, being fulfilled, the enterprize was not puſhed farther. But the French in the afternoon made an attempt to regain the ground which they had loſt. Their endeavours were unavailing. It is ſaid, that during the action ſeveral bombs were thrown into Mentz by the French.

The imperialiſts, after taking poſſeſſion of the Hardenberg near Mentz, have without loſs of time raiſed redoubts on it, and will endeavour to maintain it as a poſt of great conſequence. They did not ſtay long at Mombach, it being at too great a diſtance; the loſs of the French is eſtimated at 2000 men; and that of the Germans at 300 killed, and 370 wounded; ſeven officers wounded, and one killed. Field-marſhal Clairfait arrived at Mentz on the 27th ult.

HISTORICAL CHRONICLE.

MAY 4.

AT eleven o'clock on Friday morning, at Spithead, a fire broke out on board his majeſty's ſhip Boyne, of 98 guns, which continued with irreſiſtible violence till five o'clock, when the magazine blew up. It was firſt diſcovered in the afterpart of the ſhip, and is ſuppoſed to have proceeded either from a live cartridge from the muſkets of the ſoldiers, who were exerciſing with ſmall arms on the windward ſide of the ſhip, having lodged in the captain's or admiral's cabin, and caught ſomething combuſtible, or from the funnel of the admiral's cabin having been on fire, and communicated to the deck.

The flames burſt through the poop before the fire was diſcovered. Fortunately, the greateſt part of the powder had been ſent on ſhore three days ago, and, upon the firſt alarm, the cock was turned upon the grand magazine. The fore and aft hanging magazines contained but little powder; the former exploded with very little effect.

When the fire broke out, there was a freſh breeze at SW, and it being tide of ebb, the ſhips were riding with their ſterns to the wind. Within half an hour after the commencement of the fire, the tops and all the rigging were in a blaze.

About twelve the tide turned, and the poſition of the ſhips became changed, but it was then too late to make any attempt, or even for boats to get near her. Previouſly to this, however, from the number of boats that went inſtantly to their aſſiſtance, it is hoped that moſt of the crew were ſaved.

On muſtering the men taken into the

different ſhips, it appeared there were only fourteen miſſing, of whom eleven are ſuppoſed to have periſhed: all the officers and warrant officers were ſaved.

All her guns were loaded, and as they became heated, went off, the ſhot falling among the ſhipping; ſome of them even reached the ſhore.

On board the Queen Charlotte, two men were killed, and one wounded, by the ſhot from the guns of the Boyne, as they went off in ſucceſſion.

It was upward of two hours from the firſt diſcharge till all the guns had gone off. About two her cables were burnt, and ſhe went adrift, the fire blazing through every port-hole. The fight, though at noon-day, was awfully grand. The ſhips to leeward of her having got under weigh to get clear of her, ran down to St. Helen's, and ſhe drifted ſlowly to the eaſtward, her mizen-maſts and top-maſts having fallen down before ſhe began to drift.

About five o'clock the wreck was drifted by the tide farther on the ſpot, oppoſite South Sea Caſtle, when the magazine blew up with a very great exploſion.

This noble ſhip, which was only five years old, was completely manned and victualled; there were alſo a vaſt number of women and children on board, many of whom muſt have periſhed. The men jumped overboard, and were moſtly taken up by boats belonging to the fleet, which had all been manned on the firſt alarm, and ordered to render every aſſiſtance.

MAY 7.

Yeſterday the operation of the act, impoſing a duty on perſons wearing hair-powder, of any ſort or compoſition whatever, commenced; from which day, one calendar month is allowed every one to take out a certificate; which is to be iſſued by the commiſſioners of ſtamps; or perſons authorized by them in every diſtrict, and charged with a ſtamp duty of one guinea. The ſurveyors of houſes and windows to give notice within the enſuing fortnight, to the occupiers of houſes and lodgings, to deliver liſts of all perſons who have worn hair-powder, in ſuch houſes or lodgings, at any time after this day. Such notices to be in future annually delivered within fourteen days after the 5th of April, and to ſpecify thoſe who have worn hair-powder within the preceding twelve months. The firſt certificates to be in force till the 5th of April next, if iſſued at any time preceding that; and all ſuch certificates, whenever taken out, to expire on the 5th of April in every year. Liſts of the perſons taking licences to be made out, and ſtuck up on the church doors of each pariſh for four weeks. Maſters paying for ſervants to receive a certificate to extend to the ſucceſſors of ſuch ſervants. Foreigners allowed twenty-one days, after their arrival in the kingdom, to take out a certificate.

Any perſon may wear powder for the next month, provided that within that time they take out a certificate; but if they do not, they will become liable to the penalty for having worn it.

Exemptions.—The royal family, and their immediate ſervants. Clergymen and diſſenting preachers, having leſs than 100l. a year. Subalterns, non-commiſſioned officers, and privates in the army, militia, marines, fencibles, and volunteer companies; (of the latter all officers are exempted.) Officers in the navy, under the rank of commanders. All beyond two unmarried daughters in a family; if two are paid for.

Penalties.—Defacing liſts on church-doors, 40s. Wearing powder without a licence, 20l. Selling or aſſigning a certificate, or uſing it if ſo ſold, &c. 30l. Officers appointed to receive liſts, and make out certificates, neglecting their duty, 50l. Occupier of houſe or lodgings neglecting to make ſuch liſt, or omitting thereout perſons liable, 20l.

Juſtices of peace may mitigate penalties, under 20l. not leſs than half.

MAY 8.

Yeſterday was held the anniverſary meeting of the ſons of the clergy. The ſermon was preached by the rev. Charles Peter Layard, D.D. F.R.A.S.S. chaplain in ordinary to his majeſty.

Collection at St. Paul's on Tueſday the 5th inſt.	-	-	104 14 6
Ditto, Thurſday the 7th			194 13 6
At Merchant Taylor's Hall			566 15 6
			£866 3 6

MAY 11.

Rear admiral Bligh, major Trench, of the marines, and two midſhipmen, late of the Alexander man of war, arrived at Plymouth yeſterday, from France, by conſent of the committee of public ſafety; they left Breſt on the 5th inſtant, and took paſſage in a Daniſh ſhip.

MAY 12.

On Saturday Le Maitre and Smith were diſcharged from the New Priſon, Clerkenwell, where they have been detained ſome time for a conſpiracy. Higgins, accuſed

of the ſame crime, was diſcharged on Monday. *See Vol. XCV, page 307.*

MAY 16.

On Tueſday, April 28, a court-martial was held on board the Glory of 98 guns, in Portſmouth harbour, on captain Anthony James Pye Molloy, of the Ceſar of 74 guns, upon the charge of his not having brought up his ſhip, and exerted himſelf to the utmoſt of his power, in the engagements which took place on the 29th of May and 1ſt of June 1794; and for not croſſing the enemy's line.

The following were the members that conſtituted the court.

ADMIRALS:

Joſ. Peyton, preſident, Charles Buckner,
Sir Richard King, John Colpoys.

CAPTAINS:

Alexander Greene, C. Edm. Nugent,
Francis Parry, Sir Eraſ. Gower,
Andrew Mitchell, Right hon. lord
Chriſtopher Parker, C. Fitzgerald,
Cha. Morris Gould, J. Rich. Dacres.

JUDGE ADVOCATE: Moſes Greatham, eſq. PROSECUTOR: Sir Roger Curtis.

The examination of the witneſſes to prove the charges, and of the witneſſes in his favour, extended this trial to ſixteen days, and on Friday, May 15, the court being met for the laſt time, the judge advocate, after ſome preliminary formalities, read a paper, which ſtated the purpoſe for which the court-martial was called, the circumſtance which cauſed it, the names of the members, and the charges which they had to try. The firſt charge was, that captain Molloy, of his majeſty's ſhip Ceſar, did not, on the 29th of May 1794, croſs the enemy's line, in obedience to the ſignal of the admiral; the ſecond, that on the 1ſt of June he had not uſed his utmoſt endeavours to cloſe with and defeat the enemy.

The SENTENCE.

The court having heard the evidence on the part of the proſecution, and that on behalf of captain Molloy, and having duly weighed and conſidered the ſame, were of opinion—

'That the ſaid charges have been made good againſt the ſaid captain Anthony James Pye Molloy. But having found that, on the ſaid 29th of May and 1ſt of June, as well as on many former occaſions, captain Molloy's courage had always been unimpeachable—the court were of opinion, that captain Molloy, then commanding the Ceſar, ſhould be diſmiſſed from his majeſty's ſaid ſhip the Ceſar; and ordered that he be accordingly forthwith diſmiſſed.'

Captain Molloy, who heard the ſentence of the court with great coolneſs, was told by the preſident, that he was no longer chargeable; upon which he immediately retired.

MAY 21.

Yeſterday, five malefactors were executed before Newgate, namely, Ruſſel Farmer, convicted in laſt December ſeſſions, for ſtealing out of a letter two bank-notes, the property of Thomas Buſh, eſq. and James Pepperdy, convicted in January ſeſſions, for ſtealing out of a letter divers bills of exchange, the property of Joſeph Robinſon; Edward Barnes, alias Thompſon, for ſtealing in the houſe of John Jardin, a gold watch; and Robert Simpſon and Robert Roberts, for robbing Harriot Villerbois on the highway of a gold watch and a purſe, containing three guineas.

Evan Morgan, a letter-ſorter, for ſecreting a letter at the Poſt-office, containing a bill of exchange, value 50l. was to have been executed with the above, but, on account of his youth, not being more than ſixteen, was reſpited during his majeſty's pleaſure.

George Errington, eſq. of Grays, in Eſſex, has within theſe few days loſt his life in the following extraordinary manner:—Having lately married, he made a ſettlement of 100l. per ann. on a female favourite, with whom he had for ſome time before cohabited; the lady nevertheleſs, thinking herſelf aggrieved, went from London, on Wedneſday ſe'nnight to his country reſidence, and having obtained admittance into the parlour where Mr. and Mrs. Errington were ſitting, ſhe drew a piſtol from her pocket, and fired it at him. The ball ſhot off his thumb, and entered his ſide, but, being extracted in a few minutes after, he appeared in a fair way of recovery for two or three days. Unhappily, however, very alarming ſymptoms of diſſolution appeared on Sunday laſt, with which he laboured in the moſt excruciating agony till Wedneſday, when he died. The aſſaſſin is committed to Chelmsford gaol.

Mr. Errington was huſband of the noted Mrs. Errington, from whom he was divorced before his connection with the inſtrument of his death.'

MAY 22.

Yeſterday, Solomon Iſdwell was tried at the Old Bailey, upon the charge of having forged and uttered certain papers, pur-

purſing to be 6s. ſtamps, with the intent of defrauding the revenue produced by the ſtamps. Moſes, who was the principal witneſs, and had been admitted an evidence, gave a long account of the whole tranſaction, in which he ſtated, that a preſs had been procured by the priſoner and his brother, who was ſhot in Artillery-lane; that he had ſeen the priſoner in the act of ſtamping them, and that he the witneſs, ſent them down to a Mr. Wolfe, at Portſmouth, pretending they were part of the ſtock of a ſtationer who had failed.

To corroborate this man's teſtimony, ſeveral witneſſes were called and examined, as to the preſs being in poſſeſſion of the Iſdwells; the bills were produced, which had been tranſmitted up by Wolfe for payment, and which were indorſed by Iſdwell; and the ſtamps produced were ſworn to be forged.

The trial laſted from half paſt three till nearly as much after eleven, when the jury went out for more than an hour and a half, and then returned their verdict—Guilty.

MAY 23.

Yeſterday, two priſoners were capitally convicted at the Old Bailey, viz. Maria Thereſa Phipoe, for feloniouſly making an aſſault on John Courtoy, in a certain dwelling-houſe near the king's highway, and robbing him of a promiſſory note for 2000l. but an objection in point of law ariſing, her judgment was reſpited for the opinion of the twelve judges; and James Clark, alias Richard James Sheers, for feloniouſly making, forging, counterfeiting, and publiſhing as true, a certain order for payment of money with the name Edward Gepp thereto ſubſcribed, bearing date Chelmsford, 18th April 1795, and directed to ſir Richard Carr Glynn, and co. for the payment of 22l. on ſight, to Mr. S. Birch or bearer, with intent to defraud ſir Richard Carr Glynn, and co. bankers, London.

MAY 25.

Oxford, May 23. Wedneſday night laſt, that noble manſion-houſe, Cliffden, the property of the earl of Inchiquin, on the banks of the Thames, near Henley, and formerly the reſidence of his royal highneſs the prince of Wales, caught fire by the careleſſneſs of a ſervant turning down a bed.—The flames were ſo rapid, that very few articles of value were ſaved, the whole of that ſtately edifice being entirely reduced to aſhes.

MAY 27.

Yeſterday morning, an expreſs arrived from Dover at the duke of Portland's office, with news from France, brought by a Daniſh ſhip arrived there from Calais. By this, information is received, that on the 22d inſtant, there was an inſurrection at Paris, led on by the jacobin party; that this mob entered the hall of the convention, and diſperſed the members; that Ferrand, the principal public writer in favour of the moderate party, and alſo a member of the convention, was aſſaſſinated in the convention; that the mob diſplaced all the public committees, and ſubſtituted in their ſtead, a committee of eight perſons of the jacobin faction, as an executive government; that during this momentary triumph, they ranſacked the papers of the committee of public ſafety, lodged in the Thuilleries, in which the convention alſo ſits, by which it was diſcovered that the government had concluded a treaty of peace with the prince of Heſſe, the prince of Saxe, and alſo another of the princes of the German empire, and that a treaty of ſtill greater importance, ſuppoſed to be with Spain, was in great forwardneſs; that the jacobins triumphed for ſeveral hours, until at length the armed force at Paris aſſembled in ſufficient ſtrength to oppoſe them; and the reſult was, that they were completely overthrown, and the committees re-inſtated.

IRELAND.

Dublin, May 5. Mr. Grattan, having, according to notice given, introduced a bill into the houſe of commons, to enable Roman catholics to ſit in either houſe of parliament, and to enjoy certain high offices, the ſecond reading of the bill came on yeſterday, when Mr. ſolicitor-general moved that it be rejected, and was ſeconded by lord Kingſborough. A debate enſued, which laſted ſeventeen hours, when the queſtion was decided by 155 for the rejection, and 84 againſt it.

MARRIAGES.

Richard Brinſley Sheridan, eſq. M. P. for Stafford, to miſs Ogle, only daughter of the dean of Winchester.

Sir James Sanderſon, bart. M. P. for Malmeſbury, to miſs Skinner, daughter of the lord-mayor.

Hon. lieutenant-col. George St. John, to miſs Lavinia Breton, daughter of William Breton, eſq.

DEATHS.

HON. Thomas Talbot, brother to the late and uncle to the preſent earl of Shrewſbury.

Sir Herbert P. Packington, bart.

John Aldridge, eſq. M. P. for Shoreham.

Thomas Sainſbury, eſq. alderman of Billingſgate-ward.

Henry Beaufoy, eſq. M. P. for Great Yarmouth.

Thomas duke of Newcaſtle, a major-general in the army.

James Boſwell, eſq. Author of the Life of Dr. Johnſon, &c.

PROMOTIONS.

THomas Pickering, eſq. mayor of Arundel—knighted.

Earl of Bute—Ambaſſador extraordinary and plenipotentiary to the court of Madrid.

John Eamer and Robert Burnett, eſqrs. ſheriffs of London—knighted.

Earl of Mount-Edgecumbe—Lord-lieutenant of Cornwall.

Robert Mackreth, eſq. M. P. — Knighted.

William Luſhington, eſq. M. P. for London—Alderman of Billingſgate-ward.

BANKRUPTS. From the GAZETTE.

MARCH 28.

JOhn Camppen, of St. Thomas'-ſtreet. Southwark, coachmaſter.

William Cunnington, of Moulton, in Lincolnſhire, miller.

Thomas Goodwin, of Alderſgate-ſtreet, linen-draper.

George Moody Longcroft, of Havant, in Hants, money-ſcrivener.

Michael Waugh, and John Price, of Leeds, in Yorkſhire, bookſellers.

MARCH 31.

Joſeph White the elder, of Staines, innholder.

Samuel Felton, of Curzon-ſtreet, London, ſcrivener.

Henry Webſter, of Fleet-ſtreet, ſtationer.

John Swire, of Halifax, in Yorkſhire, merchant.

Edward Angell, of Shoe-lane, cabinet-maker.

Walter Ewer, of Little Love-lane, Aldermanbury, merchant.

APRIL 4.

John Gould Read, of Trowbridge, in Wilts, clothier.

Robert Parker, of Milthorp, in Weſtmorland, cotton-manufacturer.

Joſhua Brittan, of Spalding, in Lincolnſhire, innkeeper.

George Turner, of Solford, in Lancaſhire, beer-brewer.

Edward Prockter, of Sheffield-ſtreet, Clare-market, tallow-chandler.

John Pettley, of Lavenham, in Suffolk, innholder.

James Parr, of Mancheſter, innkeeper.

Thomas Lovett, of Bath, ſtatuary.

Thomas Court, of Oxford, bargemaſter.

James Taylor, of Cheapſide, hardwareman.

APRIL 7.

John Archer, of Birmingham, victualler.

George Scholes, of Oldham, in Lancaſhire, ſhopkeeper.

James Bagnall, of Nottingham, ſilk-dyer.

APRIL 11.

Stephen Peter Triquet, of Charterhouſe-ſquare, ſcrivener.

Thomas Thompſon, of Mancheſter, innkeeper.

Edward Lee, of Crawley, in Suſſex, innholder.

Nathaniel Aſhton, of Wrexham, in Denbighſhire, innkeeper.

James Kenworthy, of Quick, in Yorkſhire, dyer.

Leopold Kuſia, of Oxford-ſtreet, furrier.

John Pearſon, of Pennington-ſtreet, St. George, Middleſex, victualler.

Thomas Hollingſhead, of Kingſland, cowkeeper.

APRIL 14.

Francis Davenport, of Marſden, in Yorkſhire, clothier.

William Vaughan, of St. Margaret's-hill, Southwark, linen-draper.

APRIL 18.

James Ford, of St. Paul's Churchyard, upholder.

Edward Hughes Hemming, of Bromſgrove, in Worceſterſhire, mercer.

William Wild, of Mancheſter, fuſtian-manufacturer.

Joſeph Simpſon the younger, of Birmingham, coal-merchant.

John Waring, of Birmingham, japanner.

Joſeph Mollins, of Weſt Coker, in Somerſetſhire, ſailcloth-maker.

Robert Hoakeſly, of Cheſter, merchant.

Joſeph Weſt, of Drury-lane, taylor.

William Bethell, of Covent-garden, fruiterer.

Thomas Wapſhott, of Tufton-ſtreet, Weſtminſter, carpenter.

Thomas Sill the younger, of Heworth Shore, Durham, potter.

Frances Tidmarſh, of Great Surry-ſtreet, Surry, dealer.

John Murray, of Sherbone-lane, merchant.

APRIL 21.

John Williams, of Queen-ſtreet, Drury-lane, linen-draper.

Thomas Moſes, of Bath, linen-draper.

Thomas Elliot, of Lincoln, hoſier.

Joſeph Billings, of Taunton, in Somerſetſhire, linen-draper.

John Cook, of Glouceſter, dealer.

William Jones, of Stockport, Cheſhire, houſe-builder.

Eliſabeth Dakin, and Thomas Dakin, of Liverpool, ſailcloth-manufacturers.

James Shaw, of Tonge with Haulgh, in Lancaſhire, and William Shaw and John Boyes, of Mancheſter, fuſtian-manufacturers.

Robert Eglin, and Lawrence Eglin, of Sheffield, in Yorkſhire, and of South Kelſey, in Lincolnſhire, merchants.

Joſiah Wilſon, of Banbury, in Oxfordſhire, innkeeper.

APRIL 25.

George Norton, of Ipſwich, in Suffolk, ſilverſmith.

John Thomas Woolley, of Biſhopſgate-ſtreet, Sadler.

Samuel Long, of Briſtol, hooper.

Nathaniel Napper the younger, of Birdham, in Suſſex, grazier.

Thomas Kenyon, of Pike Low, in Lancaſhire, woollen-manufacturer.

Martin Weſtmoreland, of Eaſt-lane, Bermondſey, brewer.

Timothy Topping the younger, of Parker's-row, Dockhead, merchant.

Thomas Gilſon, of Fenchurch-ſtreet, woollen-draper.

APRIL 28.

William Howarth, of Halifax, Yorkſhire, chymiſt.

John Parker, of Wapping High-ſtreet, ſailmaker.

John Beard, of Primroſe-ſtreet, biſhopſgate-ſtreet, worſted-ſkein-dyer.

Thomas Denniſon, of Rickergate, in Cumberland, ſpirit-merchant.

Thomas Bland, of Surry-ſtreet, Strand, bill-broker.

George Lucas, of Beach Farm, Herts, dealer.

Nathaniel Napper the elder, of Birdham, in Suſſex, grazier.

John Biſhop the younger, of Stroud, in Glouceſterſhire, dealer.

John Griffin the younger, of Clare-court, Drury-lane, butcher.

George Meinel, of Maid-lane, Southwark, Spaniſh leather-dreſſer.

James Spiller and John Fownes, of the minories, hoſiers.

James Wright, of New-ſtreet, Covent-garden, victualler.

MAY 2.

Henry Piſtor, of Thavies-inn, Holborn, watch-maker.

Thomas Hill, of Surry-ſtreet, Blackfriars-road, Surry, hatter.

Oſborn May, of Salcote, in Eſſex, miller.

John Gray, of St. George the Martyr, Southwark, common brewer.

Charles Francis Perron, of Duke-ſtreet, Weſtminſter, perfumer.

James Baily, of Grub-ſtreet, bricklayer.

Mary Blake, of Frankfoed, in Somerſet, widow, clothier.

Stephen Adams, of Buckland Denham, in Somerſetſhire, clothier.

MAY 5.

Daniel Shuttleworth, of Ludgate-ſtreet, hoſier.

Joſhua Cope, of Brydges-ſtreet, Covent-garden, broker.

Michael Kavana, of the Old Change, callico-glazer.

Aaron Marſhal, of Bridlington-key, in Yorkſhire, merchant.

Thomas Boultſbee, of Bruerton, in Staffordſhire, ropemaker.

John Hughes, and William Mills, of Briſtol, linen-drapers.

MAY 9.

Thomas Smith, of Park-ſtreet, Groſvenor-ſquare, taylor.

John Cole, of Bridgwater, in Somerſetſhire, ſhopkeeper.

Joſeph Purvaſs, of High-ſtreet, Marybone, ſtaplekeeper.

George Gillham, of Charing-croſs, victualler.

James Foſter, of Newington-cauſeway, Surry, hoſier.

Edward King, of Gower's-walk, Whitechapel, horſe-dealer.

Joſeph Hopkins, of Sodbury, in Glouceſterſhire, dealer.

Hector Applebury Cookſey, of Preſteign, in Radnorſhire, apothecary.

Richard Spear, of Plymouth, bruſh-maker.

Stephen Wilſon, Wood-ſtreet, Cheapſide, ſilkman.

John Dearlove the younger, of Harrow-gate, in Yorkſhire, cotton-manufacturer.

Thomas Robinſon, of Charlotte-ſtreet, Portland-place, victualler.

John Seaman, of Iron-gate, St. Catherine's, victualler.

MAY 12.

James Arthur M'Donnel, of Oſborn-ſtreet, St. George, money-ſcrivener.

Henry Bitter, of Lothbury, merchant.

William Wigley, of Oxford-ſtreet, hoſier.

Thomas Towler, of Maſbrough, in Yorkſhire, cornfactor.

Richard Smith, of Whitchurch, in Salop, money-ſcrivener.

David Morgan, of Lanvihangel Geneur Glyn, in Cardiganſhire, dealer.

Thomas Tibbs, of Chittern, in Wilts, wine-merchant.

Thomas Nuttall, and John Smethurſt, of Salford, in Lancaſhire, brewers.

James Brindle, of the Middle Temple, money-ſcrivener.

George Wilſon, and Robert Buchanan, of Lambert-hill, wine-merchants.

John Oldham, of Mancheſter, grocer.

MAY 16.

William Giles, of Swanſea, in Glamorganſhire, ironmonger.

John Dickins, of Chad's-row, Battlebridge, money-ſcrivener.

John Hair, of Spur-ſtreet, Leiceſter-ſquare, merchant.

John Mitchell, of Barnes, in Surry, carpenter.

George Betſon, of Mancheſter, fuſtian-manufacturer.

Robert Corbett, and Samuel Aſſlack, of Liverpool, merchants.

John James Brown, and William Brown, of Great Queen-ſtreet, Lincoln's-inn-fields, glaſs-grinders.

William Rycroft, of Leadenham, in Lincolnſhire, butcher.

James Shaw, of St. Martin's-lane, dealer.

William Maſon, of St. George the Martyr, Surry, carpenter.

MAY 19.

Simeon Bates, of Bunhill-row, Old-ſtreet, watch-maker.

Peter Bentley, of Pancras-lane, Buckleſbury, maſon.

John Jardine, of Mary-Port, in Cumberland, dealer.

John Weaver, of North Curry, Somerſetſhire, dealer.

Matthew Hawkins, of Mancheſter, upholſterer.

Thomas Chantry, of Bathwick, in Somerſetſhire, architect.

James Hiſcocks, of Frome Selwood, in Somerſetſhire, clothier.

William Pearce, of Chiſwick, carpenter.

Simeon Pope, of Hampſtead, ſtock-broker.

William Francis, of Fenchurch-ſtreet, ſhopkeeper.

Margaret James, and Matthew Smith, of Great Ryders-ſtreet, St. James, bricklayers.

MAY 23.

Matthias Deane, of Reading, Berks, money-ſcriver.

John Bray, of Jamaica-row, Bermondſey, lighterman.

John Mawe, of Biſhop Hatfield, Hertford, innholder.

Joſeph Cawthra, of Yeadon, in Yorkſhire, merchant.

Benjamin Skelton, of Greenwich, in Kent, ſhopkeeper.

William Samuel, of High Holborn, coach-maſter.

John Vaughan, of Bury St. Edmund's, in Suffolk, ſadler.

John Maurice, of Oxford-ſtreet, linen-draper.

Francis Joſeph Macke, of Thayre-ſtreet, Mancheſter-ſquare, upholſterer.

Francis Gilding, of Alderſgate-ſtreet, cabinet maker.

Walter Webſter, of Smithfield, hay and ſtraw ſaleſman.

NEW PUBLICATIONS.

MOORE's View of the French Revolution, 2 vol. 8vo. 16s.

Eliſa Powell, or Trials of Senſibility, 2 vol. 12mo. 8s.

Fugitive, an Artleſs Tale, 2 vol. 12mo. 7s.

Royal Captives, vol. 3, 4, 6s. ſewed.

Wilkinſon's Hiſtory of the Yorkſhire Theatres, 4 vol. 12mo. 16s.

Warner's Hiſtory of the Iſle of Wight, 8vo. 7s.

Good's Diſſertation on the Diſeaſes of Priſons and Poor Houſes, 2s. 6d.

Wilkinſon's Tour through France, Germany, and Italy, 2 vol. 12mo. 9s.

Beaumont's Travels through the Maritime Alps, folio, 5l. 5s. boards.

White's Naturaliſt's Calendar, by Aikin, ſmall 8vo. 6s.

Morgan's Inveſtigation of the Trinity of Plato, 8vo. 3s. 6d. ſewed.

Eſſay on the Revenues of the Church of England, 8vo. 6s.

Wraxall's Hiſtory of France, 3 vol. 4to. 3l. 12s.

Pownall's Roman Antiquities dug up in Bath, 4to. 2s. 6d.

Roſe's Conſtitutional Catechiſm, 2s.

Myſteries elucidated, 3 vol. 12mo. 10s. 6d.

Peake's Caſes in King's Bench, 8vo. 8s. 6d.

Orwell Manor, 3 vol. 12mo. 10s. 6d.

Prieſtley's Anſwer to Paine's Age of Reaſon, 2s.

Windſor Caſtle, an Opera, 1s. 6d.

Haworth's Obſervations on the Genus Meſembryanſemum, 7s. 6d. boards.

A Poetical Sketch of the Campaign of 1793, 4to. 4s.

Deſerted Daughter, a Comedy, 2s.

Deſcription of Corſica, 8vo. 5s.

Radcliffe's (Ann) Journey through Holland, 1794, 4to. 2l. 5s.

Moritz's Travels in England, 1782, 12mo. 4s.

Victim of Magical Deluſion, 3 vol. 12mo. 12s.

Louvet's Life of Chevalier de Faublas, 4 vol. 12mo. 16s.

Latta's Syſtem of Surgery, 3 vol. 8vo. 2l. 7s.

The Motto, a Novel, 2 vol. 12mo. 7s.

Review of the Landſcape, a Poem, 8vo. 6s.

Life's Vagaries, a Comedy, 2s.

Wright's Gentleman's Miſcellany, 12mo. 3s.

Evening Walk, a Sentimental Tale, 12mo. 3s.

Hair-powder, a Plaintive Epiſtle to Mr. Pitt, 2s. 6d.

Napleton's Advice to a Student, on the Qualifications and Duties of a Miniſter, 8vo. 3s. 6d. ſewed.

Jackſon's Sermons, 8vo. 5s.

Smith's (Adam) Philoſophical Eſſays, with his Life by Stewart, 4to. 18s.

Niſbet's Inquiry into the Cure of Scrofula and Cancer, 8vo. 4s. boards.

Playfair's Hiſtory of Jacobiniſm, 8vo. 10s. 6d.

Ward's Inquiry into the Law of Nations, 2 vol. 8vo. 17s.

Hanger's Reflections on the Attack and Defence of London, 3s.

Netley Abbey, 2 vol. 12mo. 7s.

Huck's Tour through North Wales, 12mo. 3s.

Works of John Hall Stevenſon, with Notes, 3 vol. ſmall 8vo. 8s.

Adopted Child, a Drama, 1s.

Wakefield's Poetical Tranſlations from the Ancients, 2s. 6d.

Lander's Poems, ſmall 8vo. 5s.

AVERAGE PRICES of CORN.

May 16, 1795.

By the Standard Winchester Quarter of Eight Buſhels.

INLAND COUNTIES.

	Wheat.		Rye.		Barley.		Oats.	
	s.	d.	s.	d.	s.	d.	s.	d.
Middleſex	68	2	44	6	36	10	27	11
Surry	68	0	36	0	37	0	29	0
Hertford	64	9	——		36	3	25	10
Bedford	63	11	——		35	7	25	4
Huntingdon	61	3	——		34	8	22	6
Northampton	62	0	44	3	35	0	24	2
Rutland	62	6	——		40	0	24	6
Leiceſter	64	10	——		40	0	25	3
Nottingham	71	6	46	9	39	6	26	6
Derby	69	5	——		41	9	27	9
Stafford	68	9	——		41	8	26	10
Salop	68	7	55	0	43	4	28	6
Hereford	61	11	44	8	39	9	28	9
Worceſter	66	0	——		41	9	31	2
Warwick	70	4	——		42	0	29	5
Wilts	58	4	——		37	4	26	10
Berks	65	5	——		35	1	28	2
Oxford	62	2	——		37	4	26	8
Bucks	64	4	——		35	8	27	6
Brecon	66	5	——		35	2	24	8
Montgomery	70	5	57	6	41	4	24	0
Radnor	65	3	——		37	10	29	10

MARITIME COUNTIES.

Eſſex	66	4	39	0	34	0	30	0
Kent	63	10	37	0	34	0	27	6
Suſſex	60	11	——		35	0	27	0
Suffolk	66	3	42	0	34	9	27	3
Cambridge	62	1	42	4	31	7	22	2
Norfolk	63	1	43	0	31	8	26	6
Lincoln	62	5	——		38	2	21	11
York	61	9	48	4	35	6	23	1
Durham	58	1	——		33	8	25	6
Northumberland	56	1	42	8	30	0	21	12
Cumberland	70	11	57	0	35	2	22	6
Weſtmoreland	68	5	52	0	35	9	23	8
Lancaſter	73	3	——		37	11	22	9
Cheſter	69	2	——		40	8	25	11
Flint	64	9	——		44	9	——	
Denbigh	70	6	——		44	9	24	0
Angleſea	——		——		36	0	——	
Carnarvon	65	8	——		41	4	19	4
Merioneth	68	8	54	0	44	11	21	10
Cardigan	59	10	45	4	38	2	16	0
Pembroke	50	2	——		35	3	16	8
Carmarthen	57	0	——		34	0	16	0
Glamorgan	64	8	——		45	0	24	0
Glouceſter	63	2	——		38	10	28	8
Somerſet	62	11	——		38	0	20	8
Monmouth	64	10	——		41	1	——	
Devon	71	10	——		34	6	24	3
Cornwall	65	9	——		34	2	24	2
Dorſet	64	5	——		34	9	——	
Hants	62	7	——		36	20	24	8

Peck Loaf, 3s. 2d.

PRICES of STOCKS, from APRIL 28, to MAY 27, 1795, both inclusive.

By ANTHONY CLARKE, Stock-Broker, No. 13, Sweeting's-Alley, Cornhill.

Days	Bank Stock.	3 per C. reduced.	3 per C. consols.	4 per C. consols.	5 per C. consols.	Long Ans.	Short Ans.	India Stock.	India Bonds.	South Sea Stock.	Old Ann.	New Ann.	Navy Bills.	English Lot. Tic.
28	159 ¼	66 ⅛	65⅛a65⅞	shut.	99	18 ¼	8 ¼	191 ¼					2 ¼ dif.	
29	162	67	66⅛a65⅞	79 ¼	99 ⅛	18 ¼	8 ¼		3 dif.				2 ¼	
30	160 ¼	66 ⅛	65⅞a⅛	80	99	18 ¼	8 ¼	193					2 ¼	
1	159 ¼	65 ¼	65⅛a¼	79 ¼	98 ⅛	18 ¼	8 ¼	192	par				2 ¼	
2		65 ¼	65⅛a⅜	79 ¼	98 ⅛	18 ¼	8 ¼	191	2s. dif.				2 ¼	
4	158 ½	65 ½	65⅛a⅜	79	98 ⅛	18 ¼	8 ¼		1		64 ⅞		2 ¼	
5	159	66	65⅛a¼	79 ⅛	98 ⅛	18 ¼	8 ¼	192 ¼	par			65 ¼	2 ¼	
6	159	65 ⅝	65⅛a¼	79	98 ⅛	18 ¼	8 ¼	192 ¼	par		65 ¼		2 ¼	
7	160 ¼	65 ⅞	65⅛a⅜	79 ¼	98 ⅛	18 ¼	8 ¼		par				2 ¼	
8		66	66a65⅞	79 ¼	99 ⅛	18 ¼	8 ¼		par		66		2 ¼	
9		66	65⅛a66	79 ¼	98 ⅛	18 ¼	8 ¼		par				2 ¼	
11	162	66 ⅛	66¼a½	79 ¼	98 ⅛	18 ¼	8 ¼						2 ¼	
12	160 ¾	66	66⅛a65⅞	79 ¼	98 ⅛	18 ¼	8 ¼	193 ¼	par				2 ¼	
13	160 ¼	66	66a65⅞	79 ¼	98 ⅛	18 ¼	8 ¼		par				2 ¼	
14														
25	160 ¾	65 ¼	65⅛a¼	79 ⅛	97 ⅞	18 ¼	8 ¼	192 ¼					2 ¼	
26	159 ¼		65⅛a¼	79	97 ⅞	18 ¼	8 ¼	192 ¼	par				2 ¼	
18	160 ¼	65 ⅝	65⅛a⅜	79 ¼	97 ⅞	18 ¼	8 ¼				65		2 ¼	
29	160 ¼	65 ¼	65⅛a⅜	79 ⅛	97 ⅞	18 ¼	8 ¼	193 ¼	par				2 ¼	
20	159	65	64⅞a65⅛	79	97 ⅞	18 ¼	8 ¼	893	par				2 ¼	
21	158 ¼	65 ¼	64⅝a65	78 ⅞	97 ⅞	18 ¼	8 ¼	192 ¼	par				2 ¼	
22	160	65 ⅜	65⅛a⅜	79 ⅛	97 ⅞	18 ¼	8 ¼	194	2s. dif.				2 ¼	
23		65 ⅜	65⅛a⅜	79 ⅛	97 ⅞	18 ¼		193 ¼					2 ¼	
25														
26														
27	160 ¼	65 ⅜	65⅛a⅜	79	97 ⅞	18 ⅛	8 ¼	193 ¼	1				2 ⅛	

☞ In the 3 per Cent. consols. the higheſt and loweſt Price of each Day is given; in every other Article the higheſt Price only, the Long and Short Annuities excepted, which are given within a ſixteenth of the higheſt Price. In the different Funds that are ſhut, the Prices are given with the Dividend till the Days of Opening.

View of Mr. Perry's Dock at Blackwall.

An Account of the Hamlet of POPLAR, *in* Middlesex: *With a Perspective View of the* SHIP-YARD *and* WET-DOCK *of* John Perry, *Esq. at* Blackwall.

BLACKWALL belongs to the hamlet of Poplar, in the extensive and populous parish of Stepney, in Middlesex. It is seated on the Thames, between the eastern extremity of Poplar and the mouth of the river Lea, which is here the boundary between the counties of Middlesex and Essex. By land, it is not above two miles from the eastern extremity of the metropolis; but by water it is not less than seven miles from London Bridge, on account of the circuitous navigation by the Isle of Dogs.

Blackwall is remarkable for the ship-yard and wet-dock made here by John Perry, esq. The dock, which is the most considerable private one in Europe, contains, with the water and embankments, near nineteen acres. It can receive twenty-eight large East Indiamen, and from fifty to sixty ships of smaller burden, with room to transport them from one part of the dock to any other.

On the spacious south quay are erected four cranes, for the purpose of landing the guns, anchors, quintaledges, and heavy stores of the ships.

On the east quay, provision is made for landing the blubber from the Greenland ships; and, adjoining, are coppers prepared for boiling the same, with spacious warehouses for the reception of the oil and whalebone; and ample conveniencies for stowing and keeping dry the rigging and sails of the ships.

On the west quay is erected a building one hundred and twenty feet in height, for the purpose of laying up the sails and rigging of the East Indiamen; with complete machinery above for masting and dismasting the ships; whereby the former practice of raising sheers on the deck, so injurious to the ships, and extremely dangerous to the men, is entirely avoided. The first East Indiaman masted by this machine was the Lord Macartney, on the 25th of October 1791; her whole suit of masts, and bowsprit, being raised and fixed in three hours and forty minutes; by half the number of hands usually employed two days in the same service.

At each end of the north bank, are erected houses for the watchmen, who have the care of the ships night and day; with cook rooms, in which the sailors dress their provisions, perfectly sheltered from the inclemency of the weather.

The basins without the dock-gate are so prepared, that ships are continually laid on the blocks, and their bottoms inspected, without the necessity of putting them into the dry docks; whereby much time and expence are saved.

In the latter end of the year 1789, and in all 1790, people came from far and near to collect the nuts, and pieces of the trees, which were found, in digging this dock, in a sound and perfect state, although they must have laid here for many ages. They seem to have been overset by some convulsion, or violent impulse, from the northward, as all their tops lay toward the south. About four feet under ground was found a shilling of king James the first.

Not far from this dock, Mr. Perry has a copperas work, situate on the river Lea, near the Thames, in the parish of St. Leonard Bromley, and which, although not so large as his copperas works at Whitstable in Kent, and Walton-on-the-Naze, in Essex, is allowed to be the most complete work of the kind in England.

Poplar, we have already observed, is a hamlet to Stepney, a parish of such extent, and so much increased in buildings, as to produce the parishes of St. Mary Stratford, at Bow; St.

Mary, Whitechapel, St. Anne, Limehouſe; St. John, Wapping; St. Paul, Shadwell; St. George, Ratcliffe Highway; Chriſt Church, Spitalfields; and St. Matthew, Bethnal Green. Poplar obtained its name from the great number of poplar trees that anciently grew there. Here is a chapel, which was erected, in the year 1654, by a ſubſcription of the inhabitants, the ground having being granted by the Eaſt India company; ſince which time, that company have not only allowed the miniſter a convenient houſe, with a garden and field containing three acres, but twenty pounds per annum during pleaſure. Here is an hoſpital belonging to the company, in which are twenty-two penſioners (ſome men, but more widows) who have a quarterly allowance, according to the rank which they, or the widows' huſbands', had on ſhipboard; and a chaldron of coals annually. There are alſo many out-penſioners belonging to the company.

Poplar marſh is reckoned one of the richeſt ſpots of ground in England; for it not only raiſes the largeſt cattle, but the graſs it bears is eſteemed a great reſtorative of all diſtempered cattle. Part of this marſh is called the Iſle of Dogs, although it is not an iſland, nor quite a peninſula. It is oppoſite Greenwich in Kent; and when our ſovereigns had a palace near the ſite of the preſent magnificent hoſpital, they uſed it as a hunting-ſeat, and, it is ſaid, kept the kennels of their hounds in this marſh. Theſe hounds frequently making a great noiſe, the ſeamen called the place the Iſle of Dogs.

A COMPARISON *between the* NOBILITY *of* GREAT BRITAIN *and* IRELAND, *and the late* NOBLESSE *of* FRANCE.

[From 'A View of the Cauſes and Progreſs of the French Revolution, by John Moore, M. D.' 2 vol. 8vo.]

THE privileges poſſeſſed, and the ſuperiority aſſumed, by the nobleſſe of France over the inferior orders, were evils of greater magnitude than they may ſeem to thoſe Engliſhmen who judge by the impreſſion which the privileges and conduct of the nobility of their own country make on the minds of their countrymen.

The precedency and diſtinctions which the nobility enjoy in common ſociety in England are never refuſed, unleſs when arrogated; and therefore are ſeldom or never aſſumed, but always granted.

When the peerage is poſſeſſed by perſons of truly great and amiable characters, which ſometimes happens, all the world are pleaſed to ſee honours ſo well beſtowed. When the reverſe is the caſe, thoſe who afford the example generally have privileges and diſtinctions of the peerage ſo cruelly counterbalanced by other moral and phyſical circumſtances, that on the whole they are far from being the objects of envy.

It has been aſſerted, that thoſe Britiſh peers who form examples of the firſt alternative were not born to the peerage, but obtained it on account of their diſtinguiſhed merit, and therefore form no exception to the pernicious effect of hereditary honours. But there is more ſatire than truth in this obſervation; for, after all that can be alleged of the torpor which the certainty of enjoying honourable diſtinction independent of perſonal merit may throw on the mind, there are inſtances of men born to the higheſt titles and greateſt fortune, who nevertheleſs have added luſtre to their country and to human nature by the moſt powerful virtuous exertions.

The privileges of the Britiſh nobility, when compared with thoſe of the nobleſſe of France before the revolution, will in general be found at once

more valuable and leſs invidious: they are aſcertained by the known laws of the land, fully underſtood, and, for the moſt part, cheerfully acquieſced in.

The moſt important of thoſe privileges conſiſts in the hereditary ſhare they have in the legiſlature; not in their forming a part of the pageantry of a court, or in having their lands exempt from taxation.

The peers of Great Britain are few in number. The peerage being confined to the perſon who has the patent, and not paſſing to more than one of his deſcendants; the brothers and ſons of a peer, whether baron, earl, or duke, are commoners. This naturally forms a ſtrong connection between the peers and commons, which is conſtantly cemented by intermarriages, by friendſhip, by the reciprocal power of being of ſervice to each other, and of courſe by mutual attentions and good offices.

So great a portion of the commons of Great Britain being connected by theſe various bonds with the peerage; ſhould ever the privileges of the latter be attacked, a ſtrong phalanx of the former would immediately appear in their defence.

The ſituation of the French nobleſſe, with reſpect to the commons, or, as they call them, roturiers, was very different. The privileges of the former were in many inſtances vague, unaſcertained by poſitive law, and depending merely on ancient uſage.

The importance of a Britiſh peer, and the conſideration in which he is held at court, particularly by the miniſter, depend in a great meaſure on his influence and popularity in the country. The importance of a French nobleman depended entirely on court favour, and dwindled into nothing at the frown of his ſovereign.

A Britiſh peer, therefore, has a ſtrong motive to cultivate the good will of all the inhabitants around his eſtate; whereas a French marquis or duke had no motive but the ſentiments of benevolence and humanity, to behave with attention and kindneſs to the peaſantry. Motives of that nature were no doubt ſufficient with many; but the inferior orders of mankind always were, and always will be, treated with more regard by their ſuperiors, when they have ſomething in their power to beſtow in return, than when that is not the caſe.

The nobleſſe of France were not legiſlators, nor did they form a court of law in the laſt reſort, as the peers of Great Britain; but they had the right of appointing judges for the deciſion of both criminal and civil cauſes on their own domains, as well as other invidious privileges which have been long aboliſhed in England. It is believed by many people in this country, that the lands of the nobleſſe were entirely free from taxes. This is a miſtake; they are ſubject to the vingtieme, which, as there are three, is equivalent to a dixieme and a half; the nobleſſe were alſo ſubject to the capitation; but as they certainly were free from the taille, and had many advantages in other reſpects as well as in the article of taxation, this tended to render them unpopular and odious to their fellow-ſubjects who did not enjoy the ſame privileges.

Letters of nobleſſe were not very difficult to be obtained in France; and when obtained, the ſame dignity and all the privileges were tranſmitted to all the deſcendants of the perſon ennobled.

They were by no means, it is true, conſidered as on a footing with the ancient nobility; but they immediately entered into the poſſeſſion of every odious privilege, which they were apt to exerciſe in the moſt odious manner. The conſciouſneſs of belonging to an ancient and honourable family, and the reſpect that is ſpontaneouſly accorded to thoſe who enjoy that advantage, preclude all jealouſy or ſolicitude on the ſubject, and in general render their behaviour natural and polite: but new and unaccuſtomed dignities often inſpire weak minds with a diſpoſition to diſplay

ſupercilious airs and a ridiculous deportment toward thoſe whom they then conſider as their inferiors, and from whom they are jealous of a want of reſpect, becauſe of their late equality.

Something of this kind is obſervable even in England, particularly in the wives of new-created baronets, and the families of new-created peers; but in England airs of this kind are received with ſuch contempt, and ſometimes repelled with ſuch ſeverity, that they are ſeldom aſſumed.

But the exuberant plantation of nobleſſe in France was ſo extenſive, and the branches ſometimes ſo extravagant and cumberſome, that it tended to check and depreſs the natural and moſt uſeful vegetation of the ſoil: for in that country the airs of ſuperiority, which the moſt petulant part of the nobility were apt to aſſume, were more difficult to repreſs, and were apparent in every place. Even at the table of the citizen, the deportment of monſieur le Comte or marquis often reminded the entertainer of the honour done him by their condeſcending to accept of his entertainment. The ſmile of protection, the proud politeneſs, the geſture, the tone, and a thouſand circumſtances, marked the vaſt diſtance that was conceived to be between them, and told him as diſtinctly as any language, that, although he had dug a fortune from the dirty mines of commerce, he muſt ſtill preſerve a ſlaviſh ſubmiſſion in the company of gentlemen. The loweſt of the nobleſſe diſclaimed all connection with the higheſt roturier; no cordial bond of union, no reciprocation of good offices, no friendſhip, could ſubſiſt between the two ranks. They were two diſtinct planets, one of which diſdained to be connected with, or influenced by, the motions of the other; the interval between them being filled with an atmoſphere of repulſive particles which kept the two ſpheres aſunder, and prevented their moving harmoniouſly in the ſame ſyſtem.

The comparative moderation and unaſſuming behaviour obſervable in the Britiſh nobility toward their fellow citizens, is not to be imputed ſo much to any original difference in their diſpoſition from that of thoſe of the ſame caſt in France or other countries, as to the government and cuſtoms of England, which do not tolerate that degree of inſolence that was formerly diſplayed with impunity in France, and ſtill continues in other countries in Europe: for although we ſee men in this country of high rank, who take as warm an intereſt in the general rights of their countrymen, and in the maintenance of the Britiſh conſtitution, as in any private rights of their own—men who have ſuch a horror at oppreſſion that no degree of power could render them tyrannical—yet we are not certain that even theſe men would have poſſeſſed this degree of equity, if they had not been educated under impartial laws.

The uſual effect of a tyrannical and partial government is to render the powerful unfeeling, and the weak abject. 'Les eſclaves,' ſays Rouſſeau, 'perdent tout dans leur ſervitude, juiqu'au deſir d'en ſortir; comme les compagnons d'Uliſſe aimoient luer abrutiſſement *.'

That this natural effect did not continue to operate in France, was owing to the numerous writings which have appeared in the language of that country, and particularly thoſe of Rouſſeau himſelf. Thoſe writings, in which the debaſing influence of deſpotiſm and the happy effects of liberty were exhibited in the moſt glowing language, with other incidental cauſes, continuing to act on the heated and elaſtic minds of Frenchmen, at laſt overcame all compreſſion, and produced an exploſion of wide and lamentable devaſtation.

* Slaves, ſays Rouſſeau, are ſo debaſed by their ſituation, that they loſe all ſentiment, even the deſire of being emancipated; like the companions of Ulyſſes, who loved the brutal ſtate into which they were ſunk.

To arreſt the ruinous effects of this, and prevent other events of the ſame nature, requires more wiſdom and delicacy than any thing which ever engaged the attention of thoſe who are entruſted with the government of the different nations of Europe.

The embers of this eruption, which have been thrown, for example, on a ſoil fortunately ſo ill adapted to their reception as that of England, would, it is probable, cool of themſelves without any other miſchief than the deteſted odour of their exhalation; whereas, if, from an imprudent zeal to diſperſe them, they ſhould be ſtirred with violence, they may communicate their fire, and ſpread new flames.

To return to our ſubject.—It may reaſonably be believed, that the numbers of the nobleſſe of France might have been reſtricted, and ſome of their privileges removed, with more ſecurity to the conſtitution which was afterward eſtabliſhed, than was produced by aboliſhing the order altogether. But it is evident, that there was ſo great a difference between the ſituation of the peerage of Great Britain and that of the nobleſſe of France, that the ſame perſon who is of opinion that the abolition of the privileges of the latter was neceſſary for the freedom and happineſs of France, may alſo be convinced, that the maintenance of thoſe of the former is a ſecurity for the freedom and happineſs of Great Britain.

Intereſting REFLECTIONS *on the* FRENCH REVOLUTION.

[From the SAME.]

IT is an old obſervation, and what might be of uſe to ſovereigns in eſtimating the ſincerity of the attachment of thoſe around their perſons, that the ſame diſpoſition which renders men obſequious to proſperity and ſervile to power, is apt to make them neglectful of the unfortunate and inſolent to the weak. No nation ever puſhed both extremes farther than the French in their behaviour to their kings in theſe oppoſite ſituations; and in both caſes they have been very laviſh in their endeavours to throw ridicule and abuſe on their neighbours for not following their example. At preſent they deride other nations for their attachment to monarchy. Formerly, when they themſelves diſplayed more abject ſervility to their kings than any other European nation, they deſcribed the Engliſh as barbarians for reſiſting the tyranny of the houſe of Stuart, and for claiming freedom. Warm in the cauſe of depreſſed royalty, they exclaimed againſt the inſolence of a people who thought they had a right to make any alteration in their government. If France and other countries of Europe had not been diſtracted with internal as well as external commotions in the time of Charles I, they would all have ſupported the cauſe of the monarch againſt the people of England for attempting to regulate their own government, and with a view to extirpate thoſe ideas of freedom which began to ſpread at that time. Lewis XIV, was excited not only by his own inclination but alſo by the wiſhes of his ſubjects to enter into a war with England, on purpoſe to puniſh the nation for the crime they had committed againſt the king, and to reſtore the monarchy. Boileau wrote an ode expreſsly againſt this nation, of which the following are two ſtanzas:

Quoi! ce Peuple aveugle en ſon crime,
Qui prennant ſon Roi pour victime,
Fit du trône un théatre affreux,
Penſe-t-il que le Ciel, complice
D'un ſi funeſte ſacrifice,
N'a pour lui ni foudre ni feux?

Armes-toi, France, prends la foudre,
C'eſt à toi de réduire en poudre
Ces ſanglans ennemis des loix.
Suis la Victoire qui t'appelle,
Et vas ſur ce peuple rebelle
Venger la querelle des Rois.

If the reſtoration had not taken place, there is little reaſon to doubt but that the monarch would have followed the poet's advice. Indeed he proved this by ſeizing the firſt pretext that occurred for *graſping the thunder* in the cauſe of kings, in acknowledging the ſon of James II, as prince of Wales, contrary to the act of ſettlement of the Engliſh parliament, and contrary to the opinion of his own council.

That ſome ſuch dialogue as the following might paſs between Lewis and ſome of his courtiers on that occaſion, is a ſuppoſition not inconſiſtent with the character of that prince and the ſentiments of his court.

Lewis. Notwithſtanding that Beauvilliers, De Torci, and others of my council, were againſt the meaſure, I have acknowledged the ſon of James II, as king of Great Britain and Ireland; and I am determined to reeſtabliſh him on the throne of his anceſtors, in ſpite of the decrees of his rebellious ſubjects in parliament aſſembled.

Courtier. The determination is magnanimous, and worthy of ſo great a monarch. It is at once juſt and politic; for the ſhocking manner in which that ungovernable people have treated their kings is a moſt alarming example to all the ſovereigns of Europe, and it would be dangerous to allow it to remain any longer unpuniſhed.

Lewis. The cauſe of kings is the cauſe of heaven, by whoſe appointment kings reign; and the vengeance of heaven evidently followed all thoſe wretches who reſiſted the power of Charles I in that iſland, as well as thoſe who afterward brought him to the ſcaffold. I have been aſſured that all of them died violent deaths. You perhaps remember the particulars.

Courtier. The avenging power of heaven was never more apparent, as your majeſty piouſly obſerves, than in the deaths of all who directly or indirectly contributed to that bleſſed king's murder. Hampden was killed in the very act of rebellion. Pym died of a horrid diſeaſe, particularly commiſſioned to cut him off. The ſoul of Cromwell was carried to hell in a ſtorm. The regicides and others had their hearts and boweis torn out on the ſcaffold. Thoſe of the king's judges who fled out of England were privately put to death in other countries by the laudable reſentment of the king's relations. Sydney, the republican, who had taken part in the rebellion againſt Charles I, was executed for a plot againſt his ſon. Ruſſel, who, to the diſgrace of the noble family to which he belonged, was for limiting the power of the crown ſo as to render it unſupportable to a prince of ſpirit, and had the inſolence to promote a bill for excluding the lawful heir becauſe he profeſſed the true religion, was juſtly beheaded; and Eſſex, who was engaged in the ſame conſpiracy with Sydney and Ruſſel, either cut his own throat or had it cut by others: for in either caſe your majeſty's obſervation is confirmed, that the vengeance of heaven in one way or another extends to all thoſe daring wretches who oppoſe the authority of their ſovereign on any pretext whatever, as kings are not accountable for the exerciſe of the power which God has given them, to any but to God alone.

Lewis. It is ſingular, however, that in placing the prince of Orange on their throne, the Engliſh have not conſigned that degree of power to him which naturally ought to belong to a king. He is limited, I underſtand, in ſome reſpects according to the ſyſtem which Ruſſel wiſhed to have applied to the duke of York.

Courtier. Your majeſty's remark is of infinite importance; for, in thus limiting the power of the crown, the Engliſh nation have eſtabliſhed a precedent which may affect the other monarchies in Europe more than even the atrocious conduct of Cromwell; becauſe many men who would ſhrink from the very idea of the murder of their ſovereign, and are averſe to a

republic, may nevertheleſs be ſo deluded, that they would agree to have the luſtre of the crown diminiſhed by circumſcribing the power of the prince who wears it. I am confident that your majeſty will be ſo completely ſucceſsful in the juſt war that you intend to engage in againſt the Engliſh nation, or rather againſt the principles and government of that nation, as to expel the preſent uſurper, and re-eſtabliſh king James in the plenitude of royal power. But if, contrary to probability, *that* ſhould be found too difficult or too expenſive, and there were no more hopes for James, it would then perhaps be highly ſuitable to your majeſty's wiſdom to aſſiſt William himſelf in obtaining that fullneſs of power over his ſubjects that becomes a king; that the dangerous and odious example of a limited monarchy may no longer ſhock the ſight of the monarchs, and corrupt the hearts of the people, of every nation in Europe.

Lewis. The name of the prince of Orange has been always odious to me. I ſhall aſſiſt *him* in nothing: but I am reſolved that James ſhall be reſtored to the throne of England with all the power that was poſſeſſed by Henry VIII, and with the re-eſtabliſhment of the true religion which that apoſtate aboliſhed.

Accordingly Lewis made the attempt; and we know that it was not till all his expenſive and ſanguinary efforts to overturn the government and change the opinions of the people of England had failed, and had nearly exhauſted the reſources and ſhaken the loyalty of his own ſubjects, that the Engliſh nation obtained peace, and were permitted to entertain their own opinions, and ſettle their government to their own taſte.

It may perhaps ſeem ſurpriſing that the people of one country ſhould have ever thought that the opinions or form of government of another country was any concern of theirs; but that ſuch an idea ſhould have prevailed in the middle or toward the end of the ſeventeenth century is not ſo ſurpriſing as it would be to find it exiſting at the end of the eighteenth. After the many bloody experiments which have been made with a view to alter men's opinions on religion, government, or indeed on any thing elſe, by force, we might naturally imagine that the point would be given up. Philip II, with his tortures and his inquiſition, and his great generals and his diſciplined armies, could make nothing of it even againſt the ſmall country of Holland, which, ſmall as it is, has never failed to repel all invaders but thoſe ſhe had ſome inclination to receive. The mighty Lewis, after being prompted by his own vanity, the flattery of his poets, and the folly of his ſubjects, to graſp *la foudre*, on purpoſe to force the Britiſh nation to receive the king and the doctrine which he approved, was obliged to deſiſt when he found that the *lightning* ſcorched himſelf and his ſubjects more than his enemies.

Indeed it is not only clear, that all attempts to alter men's opinions by violent means fail in the deſired effect; but that they generally tend to rivet them more firmly in their old ſentiments. The perſecutions of the heathens againſt the Chriſtians, and the Roman catholics againſt the proteſtants, ſufficiently prove this; and, if a more recent inſtance were neceſſary, the annals of tyranny could not afford a ſtronger than has been exhibited by the clergy of France, whom no ſpecies of perfidious cruelty and perſecution has been able to ſhake in their opinions, or prevent their avowing the dictates of their conſcience. On the execrable ſecond of September 1792, in the garden of the Carmes at Paris, the venerable archbiſhop of Arles ſaw the aſſaſſin raiſe his ſabre, and he received the repeated ſtrokes without ſhrinking, rather than ſeem to comply in the leaſt degree with decrees which he thought unjuſt and impious. The biſhop of Beauvais and the biſhop of Saintes, with near two hundred eccleſiaſtics of different denominations, were maſſacred on the

ſame day in the ſame garden, for no other crime than refuſing to diſavow their opinions.

It is not more true, that the uſual effect of perſecution or ill uſage on account of particular opinions is to make the perſecuted cling more cordially to them, and feel augmented averſion againſt thoſe of their perſecutors, than that kind and gentle treatment renders men open to argument, and diſpoſed to the renunciation of error the moment they are convinced that their opinions are erroneous. It is only ſince the Jews were treated with mildneſs, and particularly ſince they began to be careſſed and entertained by men of high rank in this country, that any of them could be convinced of their deluſion, perſuaded that the Meſſiah had already appeared in the world, and that ſome of their diſtinguiſhing ceremonies were no longer neceſſary. This obſervation ſtrikes the minds of ſome people ſo forcibly as to convince them, that creating a few Jews, ſoon after their converſion to Chriſtianity, grandees of Spain, or peers of Great Britain, would do more to the abolition of circumciſion than all the racks of the inquiſition.

Nothing revolts the ſpirit of man ſo much as to have any thing forced upon it; the very appearance of force makes it reject with diſguſt what it might have embraced ſpontaneouſly. He who even argues with a dictatorial air, indiſpoſes his hearers from admitting his inferences or adopting his opinions. A pretty certain way of ſpreading any particular way of thinking in a country, is for the government to threaten and endeavour to terrify thoſe who entertain it; it renders their own peculiar way of thinking dearer to them than it was before; it converts an opinion, which they might have changed, into a principle which it is a point of honour to maintain; and although it is dangerous for them to ſpeak their minds, yet they have an intereſt in making proſelytes which otherwiſe they would not have had, becauſe, by making many of their way of thinking, their danger will be removed.

It is the buſineſs of government to control men's actions, not their opinions; and thoſe are recorded as the happieſt times, in which the moſt uncontrolled freedom was allowed to the declaration of opinion. *Rara temporum felicitate*, ſays the hiſtorian, *ubi ſentire quæ velis et quæ ſentias dicere licet.* All the terrors of the tribunal of political inquiſition, or of the Ponte di Sopiri at Venice, cannot make one who thinks monarchy a preferable form of government to republicaniſm change his opinion; nor can all the thunder of the *ultima ratio regum* make a republican prefer monarchy. The utmoſt that ſeverities can do is to make hypocrites; it is impoſſible for them to make converts. Opinion, ſo far from being under the power of other men's will, is not under a man's own; it is the offspring of his reaſon, of whatever force that reaſon may be, whether well or ill informed; and although it is often perverted by prejudice and influenced by ſituation, yet a man's real opinion is founded on what appears to him reaſonable at the time, and he cannot alter it until what appeared reaſonable appears to him the reverſe. Opinions therefore cannot juſtly be imputed to any man as crimes. This is ſo obvious, that even one of thoſe bloody judges who examined the chevalier Saint-Méard, in the priſon of the Abbaye at Paris in September 1792, was ſenſible of it. When the intrepid Saint-Méard avowed himſelf a royaliſt, and an univerſal murmur aroſe from the bloody circle who heard him, 'Ce n'eſt pas pour juger les opinions,' ſaid the judge, 'que nous ſommes ici, c'eſt pour en juger les réſultats *.'

Had all thoſe who decided on the

* It is not to judge of men's opinions that we are here, but to judge of their actions.

face of the priſoners adhered to that maxim, there would have been no maſſacres.

Men may be royaliſts, thank heaven! and yet friends to freedom; as they may be republicans, and yet abettors of tyranny.

Without alluding to the ſhocking deſpotiſm which governs the republic of France, let us throw our eyes on other republics.

What kind of friends has freedom in the ſenate of Venice, or the great council of Bern?

If the ſame queſtion is aſked reſpecting the Britiſh houſe of peers, the anſwer will be different.

Freedom has never been without friends there.

Who were the principal authors of the revolution in the year 1688?

The wiſeſt men in the houſe of peers have been as ſincere ſupporters of the rights of the democratic part of the conſtitution, as of their own; they well know, that upon it the public liberty is chiefly founded. And the wiſeſt members of the houſe of commons have ſupported the juſt rights of the houſe of peers; they well know, that certain members of that houſe had a principal hand in forming the conſtitution, ſuch as it has been ſince the year 1688, and on ſame occaſions have had the honour of preſerving it ſince that period.

Although the royaliſts in Charles the firſt's time were generally thought enemies to liberty, it was not univerſally the caſe: ſome were the friends of liberty *notwithſtanding* their being royaliſts, and ſome were royaliſts *becauſe* they were the ſincere friends of liberty—being fully perſuaded that her happieſt and moſt permanent reſidence in this iſland would always be under a limited monarchy. And although the republicans of the ſame period were generally thought friends to freedom, yet ſome aſſumed the character and ſentiments of republicans, becauſe they wiſhed to eſtabliſh tyranny.

Men of the greateſt worth and virtue always have had, and always will have different ſpeculative opinions on thoſe two different forms of government; every man has a right to ſpeculate on government as on all other ſubjects, and while he confines himſelf to ſpeculation he is not the juſt object of puniſhment; but when from ſpeculation he proceeds to action the caſe is totally different. The peace of ſociety is not to be with impunity diſturbed with inſurrection, becauſe a few men prefer a different form of government to that under which they live. If therefore a portion of the ſubjects of a republic attempt by force to convert it into a monarchy, or if thoſe of a monarchy endeavour by the ſame means to overturn the conſtitution and form a republic; the men againſt whom ſuch actions are proved, become the juſt objects of puniſhment; and by the laws of the mildeſt government, whether monarchical or republican, that ever exiſted, that puniſhment is death.

The raſh and intemperate nature of certain decrees of the national convention ſoon after the 10th of Auguſt, diſcovered a diſpoſition to convert all the monarchies of Europe into republics; and the fooliſh anſwers made by ſome of their preſidents to certain deputations from foreign countries, which appeared at the bar of the convention, tended to ſtrengthen the ſame ſuſpicion.

That ſome inconſiderate and enthuſiaſtic men entertained ſuch an idea, is evident from the circumſtances juſt mentioned; but that the majority of the convention could think ſuch a ſcheme practicable, or that it would be for the benefit of France, to put herſelf to expence or trouble to bring it about, if it were, ſeems highly improbable.

The French pretend that they have overturned monarchy in France, becauſe of the vices inherent in that kind of government, which enfeebled the ſtate and depreſſed the energy of the nation. They declare that, by being a republic, France has acquired

triple ſtrength, and is capable of efforts far ſurpaſſing her power at any former period.

Without examining whether the efforts ſhe has lately made, and the ſtrength ſhe has diſplayed, depend on her being a republic, or on other circumſtances, how is this opinion of the French to be reconciled with their endeavouring to inſpire the other nations of Europe, particularly thoſe with whom they are at war, with a deſire to adopt a republican form of government? Do they wiſh that their rivals and enemies ſhould acquire triple ſtrength alſo? If all the monarchies of Europe were converted into republics, then, according to the principles of the French themſelves, the great ſuperiority they have acquired would be loſt, and their weight in the balance of Europe reduced to what it was before the revolution.

It may be ſaid, that in endeavouring to overturn monarchies they are actuated by hatred to kings, and by private malevolence; but whatever indications of this kind may have appeared in moments of enthuſiaſm, it is impoſſible to imagine that the governors of a great nation can, for the gratification of a childiſh humour, perſiſt in a plan, which, according to their own principles, would, when accompliſhed, render their rivals more formidable. To act conformably to ſtate policy, and conſiſtent with their declarations reſpecting the ſource of their new acquired ſtrength; ſo far from ſpreading their opinions among other nations, or uſing other means of inducing them to adopt the maxims of their convention, the French ought to lay a general embargo upon them, and confine them within their own territories as valuable ſecrets, which ſecure their ſuperiority over monarchical ſtates, as completely as the uſe of fire-arms ſecured a ſuperiority to the Spaniards over the Mexicans. It ſeems highly probable that they have now at leaſt relinquiſhed the ſyſtem of republican cruſades, if they ever ſeriouſly entertained it, and have pretty generally adopted the principles of one of their countrywomen, who in converſation with an Engliſhman, who aſſerted that it would be abſolutely neceſſary for the French nation to reſtore monarchy before they could obtain peace, replied, 'Monſieur, nous ne voulons plus de roi—c'eſt notre affaire, laiſſez nous tranquilles. Mais vous autres vous aimez les rois, à la bonne heure, prenez en une douzaine ſi vous voulez—on vous laiſſera tranquilles *.'

But if there is little reaſon to think that the French will ever take pains to ſpread their political principles in this country, there is ſtill leſs reaſon to dread that either their principles or example will be adopted by the people of Great Britain, although the French had that intention: the incidents of the French revolution are ſufficient, and far more than ſufficient, to remove ſuch an idea from every worthy mind, however fond of genuine freedom. Can a national ſtrength that is acquired by the ſeizing of private property, be an object of envy to the citizens of a country where property is ſecure? Can the idea of provinces added to France, be a compenſation to thoſe French citizens whoſe fortunes have been torn from them to defray the expence of the conqueſt? Can any amount of ſucceſs againſt foreign enemies afford conſolation to thoſe who deplore the loſs of parents, of conſorts, of children, of friends or relations, by internal maſſacres?

As England can derive no benefit from the miſery of individuals in France, and certainly feels many inconveniencies from the augmented ſtrength of that nation, by whatever horrible means it has been augmented; aſſuredly it is her intereſt, independent of ten thouſand conſiderations

* 'Sir, we have done with kings—that is our concern, which you will leave us to ſettle quietly ourſelves. But you Engliſhmen are fond of kings—very well then, take a dozen of them if you pleaſe—we ſhall not interfere.'

ariſing from general humanity, that a ſafe and honourable peace were ſpeedily obtained, by which her own proſperity might be ſecured, and the wretched individuals of France might become more happy and leſs formidable. Let France retain the republican form of government ſhe ſeems ſo fond of, if ſhe chooſes; and let the inhabitants of this iſland ſeriouſly reflect on the two great attempts that have been made in Europe to turn a monarchy into a republic. The one took place in the middle of the laſt century, the other toward the end of this. England was the theatre of the firſt, France of the ſecond. After exhibiting a moſt ſanguinary ſpectacle to Europe, of four years continuance, the firſt ended in the tyranny of Cromwell; the ſecond ſtill continues, ſpreading bloodſhed and diſmay through Europe, and rendering France the abode of wretchedneſs. Let the inhabitants of this iſland alſo remember, that monarchy was not reſtored to Great Britain by a combination of foreign powers, diſpleaſed forſooth at her having aſſumed a republican form of government. Rather than have admitted of ſuch inſolent interference, or reſtored monarchy at their command, ſhe would have remained a republic until this hour: but the free-born inhabitants of Great Britain, of their own free will and accord, without the leaſt regard or conſideration for the opinion or inclination of other ſtates, thought proper to re-eſtabliſh monarchy. And who can ſay what France left entirely to the freedom of her own choice might do? Is it unlikely that, haraſſed and diſguſted with ſo many internal convulſions, and retaining a due ſenſe of the abuſes of her ancient government, ſhe may, as ſoon as ſhe obtains breathing time, ſeek for permanent peace and proſperity in a monarchical form of government, equally free from the vices of the old ſyſtem and of the preſent? In the mean time it is devoutly to be wiſhed, that Great Britain will ever adhere to and ſupport the genuine ſpirit of her own free conſtitution; and while ſhe expreſſes a juſt deteſtation of the democratic tyranny which has prevailed in France, that ſhe will ever maintain an equal averſion to the more regular and impoſing deſpotiſm of ſome of the powers combined againſt that unhappy country.

On the PROPENSITY *to* COMPLAINT, *and the* AVERSION *to* REMEDY.

To the Editor of the Univerſal Magazine.

Sir,

I HAVE often thought, that if a tribunal were to be erected by ſpecial commiſſion, for the redreſs of all the afflictions, griefs, and calamities which we hear every day complained of, moſt of the plaintiffs would be non-ſuited, upon the ground of their either having wilfully brought ſuch misfortunes upon themſelves, or their not having done every thing that lay in their power to avert them. It is my fate to live in a grumbling neighbourhood, among a ſet of grumbling acquaintance, and in a grumbling family. I hear nothing but complaints from morning to night, and, what is very extraordinary for people who ſeem to feel their complaints ſo acutely, no perſon offers to relieve himſelf, or to profit ſo far by experiencing one ſorrow as to prevent its coming upon him a ſecond time. It really has ſometimes occurred to me that misfortunes are conſtitutional, and that a man can no more avoid diſappointment than the ſmallpox.

Sometimes I hear very grave diſcourſes on the many miſeries which riches bring along with them; that they are a curſe inſtead of a bleſſing, and the cauſe of many vexations, diſappointments, and ingratitude, to which the poor are ſtrangers. Yet, ſir, I know no rich man who ſells out his three *per cents.* and diſtributes them to others, by way of alleviating the

aforeſaid burdens, nor of any country-gentleman who parts with his dirty acres that he may keep a clean conſcience, and diſpoſe of 'houſe and land,' that he may experience, in ſuch a caſe, the truth of the old proverb, that,

'When houſe and land is gone and ſpent,
'Then *larning* is moſt excellent.'

No, ſir, riches are an evil, but it is an evil to complain, not to get rid of.

Another ſet of grumblers are for ever telling me, that the greateſt curſe attending their ſituation is to be obliged to keep a great number of male and female ſervants, who ſerve only to make one another idle, drink out their maſter's liquors, break their miſtreſs' china, and provide objects for the poor rates; yet which of theſe complainants will conſent to abridge this catalogue of misfortunes? No—There muſt be, on the part of the maſter, his gentleman, and his gentleman's gentleman, his valet out of livery, and his footman in livery; and my lady, has her lady's maids, her *tiring* woman, her own maid, and her two footmen, to walk or ride behind her.

A third ſeries of calamities ariſe from *viſiting*. It is ſo fatiguing and inſupportable, ſuch a waſte of time and money, ſuch a deal of preparation neceſſary, ſuch late hours to be kept, ſo much buſtle to go through, and ſuch a fuſs to keep well with every body, that poſitively no drayman, nay, no drayhorſe can have ſtrength to undergo it. One has no pleaſure in one's life, can never be a moment with one's ſelf, or one's family, and yet—I have never been able to perceive that the moſt outrageous of theſe diſtreſſed perſons had the ſpirit to refuſe one invitation, or neglect one opportunity of encountering the ſaid miſeries over and over.

There is a fourth claſs, who are fully as unreaſonable as any of the former, and I muſt confeſs I have leſs pity for them than for the others. Theſe are the gentlemen, both ſingle and married, who are never ſo much at home as when in a tavern, and never reliſh any thing ſo well as when they have to pay handſomely for it. They are eternally complaining of bad wine, careleſs attendance, extravagant bills, and inſolent landlords, and yet bear all theſe afflictions with ſo much philoſophy, I mean practical philoſophy, that not one of them has attempted to find out the comforts of domeſtic life and of moderation.

Connected with theſe, are a very numerous claſs of both ſexes, who are for ever telling me what ſhocking places Margate, and Ramſgate, and Brighthelmſtone are; how exorbitant the charges, how inſolent the waiters, how ſaucy the landlords, how paltry the balls and cards parties, and, in ſhort, what a terrible *bore* a watering place is. They ſpeak ſo very feelingly on theſe ſubjects, that I ſhould expect the natural conſequence would be the total ruin of the abovementioned gay reſorts; but, ſo far is that from being the caſe, that at the return of the ſeaſon, theſe very diſtreſſed perſons, to whom watering-places are ſo frightful, fly to them from the metropolis, as if the latter contained the plague, or that one of Brothers' earthquakes were to take place.

I muſt not omit to notice another ſet of grumblers, who are, indeed, in one reſpect very different from any of the former, but not one whit leſs querulous. They, good, happy people, have no calamities of their own to feel for; all that afflicts their tender ſouls is the hardſhips of the poor in this dear ſeaſon, the price of butchers meat, of bread, and every neceſſary of life. On theſe topics they deſcant with wonderful eloquence, and pathetically lament that it is not in their power to alleviate ſufferings, which they every day muſt behold. One of theſe grumblers, a few days ago, boiled ſeven pounds of veal, at one ſhilling a pound, into a ſmall tureen of ſoup; another paid eighteen ſhillings for a pair of chickens; and a third enter-

tained company with green peas at fourteen ſhillings a quart. Nay, I ſaw one of them, who had always lamented his inability to feed the hungry, and clothe the naked, very gravely and deliberately munching a pottle of ſtrawberries which he ſaid were very cheap at a ſhilling a piece.

We have heard, Mr. Editor, of Lucretius. They are not, perhaps, very common; but moſt women, it is to be hoped, will reſent every attempt to inſinuate that they are 'no better than they ſhould be.' Hence we have another claſs of matrons, who regret by loud and indignant expreſſions, that female dreſs has lately become ſo indelicate as to give modeſt women the appearance of being more bold and forward than becomes that character. I have myſelf joined in their complaints, and in my own family I adminiſtered the proper remedy; but to my great ſurpriſe, I was told by theſe very matrons, at our laſt ball, that they wondered I permitted my daughters to come into genteel company in ſuch a dreſs, with their boſoms and necks *covered* as if they had the *evil!*

There are only two claſſes more of grumblers, whom I purpoſe to notice in this letter. One of them is compoſed of thoſe who are always complaining of bad health, and who are provided with a catalogue of diſorders for every occaſion, yet are ſo enamoured of them, that you cannot affront them more than by recommending moderation in eating and drinking, early hours, and frequent exerciſe. One of theſe has often complained to me of diſorders brought on by habitual drinking. 'Why then cannot you leave off drinking?' ſaid I, in my conſequential wiſdom.—'What would you have me to do? *I muſt drink ſomething.*'—And thus it is, Mr. Editor, in all the caſes I have enumerated; the parties complaining *muſt* always do ſomething, ſay ſomething, or drink ſomething, which is the cauſe of their complaint; and thus it is that,

'Endleſs is the liſt of human ills,
'And ſighs may ſooner ceaſe than cauſe to ſigh.'

The laſt claſs I ſhall take notice of, and that very briefly, is compoſed of thoſe who complain of the ſhortneſs of life, without ever believing that it ſhall end at all. 'All men think all men mortal but themſelves.' Of this claſs I ſhall only ſay that they are numerous enough to include all to whom life is given as a ſerious truſt, and who, though they do not act as rational, will find that they are accountable creatures. But I will not dwell longer on a ſubject ſo ſerious, as my original intention was to correſpond in good humour; and, beſides, if more than a hint be neceſſary, it may be ſupplied by the reflections of your readers. I am, ſir, your very humble ſervant,

A CONTENTED MAN.

MISCELLANEOUS ANECDOTES *and* REFLECTIONS.

MEDICAL ANECDOTE.

BOUVART, the phyſician, called on a certain nobleman, whom he had attended for ſome time paſt, during a ſevere illneſs. 'Good day to you, M. Bouvart,' ſaid the ſick man, 'I am glad to ſee you. I feel quite in ſpirits, and think my fever has left me. Only judge.'—'I am ſure of it,' replied the doctor; the very firſt expreſſion you have uſed, convinces me.'—'How can that be?'—'Oh! nothing more eaſy. In the firſt days of your illneſs, when you were in ſuch danger, I was your *dear friend.* When you began to get better, I was your *dear Bouvart*; and now, I am *M. Bouvart.* You may depend upon it, that you are quite recovered.

WRIGHT of DERBY.

WHEN this celebrated painter was at Rome, he painted that very fine

figure, The Captive, from Sterne, and conſigned the picture to a friend in London, who having advice of its being landed and depoſited in the cuſtom-houſe, preſented a petition to the board, ſtating that it was a portrait painted by an Engliſh artiſt, and praying that it might be delivered duty free. In anſwer to this, he received an order to attend on a given day, and was brought before their honours. The picture was produced, and the firſt queſtion aſked was, 'Of whom is it the portrait?' The gentleman replied with truth, it was the portrait of a Roman (for it was copied from a Roman beggar) and the board ſeemed inclined to let it paſs; but an old gentleman who had long been a commiſſioner, made a ſhrewd objection, and remarked that 'this was ſuch a portrait as he had never before ſeen in his life, and taken in a manner that he did not believe either Roman, Greek, Turk, Jew, or Infidel, would ever conſent to ſit.'—'If,' added he, 'any gentleman at this honourable board choſe to have his picture drawn, would not he put on a clean ſhirt, and have his wig freſh powdered, and be clean ſhaved; anſwer me that? To be ſure he would. Now, it is here pretended, that this fellow ſat for his portrait, who had hardly a rag to cover his nakedneſs; *gemmen*, if he could have afforded to have paid for painting his picture, he could have afforded to buy himſelf a pair of breeches.' He ended, by moving that the duty might be paid; and the duty was paid accordingly.

Collectors.

The firſt of theſe is the Antiquary, who is ignorant of every thing that paſſes under his own eye, pays no attention to any improvement made in his own time, and looks with cold diſregard upon all objects, let their local and temporary importance be ever ſo great, if they have not paſſed through the funnel of antiquity.

'A ruſty coin, an old worm-eaten poſt,
'A mouldy fragment of an author loſt,'

is, with theſe gentlemen, of more value than the moſt elegant piece of modern art, or the moſt ſublime effort of modern genius. One of them, at a moſt enormous expence, collects all the ancient maps of all parts of the world, and makes it his boaſt, that among ſeveral thouſands which are in his ſtudy, there is not one in which any one place is put *near*, either the proper latitude or longitude. Similar to this are your collectors of *ſcarce* prints, who will give forty or fifty guineas for an unfiniſhed impreſſion, upon no other grounds than the engraving being taken off for an experiment before the principal figure was introduced, or pay thirty pounds for a print not worth thirty farthings, becauſe the artiſt engraved it while he was an apprentice. This has properly enough been ſaid to be burying a man of talents in the ruins of his baby-houſe; for ſurely ſuch things are little deſerving to be conſigned to the port-folio. There is another collector of a very ſingular taſte. He confines his collection to two objects, thirtieth of January ſermons, and tobacco ſtoppers. Of the firſt he has all preached by Sacheverell, and the reſt of the loyal ſupporters of church and ſtate; and of the laſt, above thirty cut out of the royal oak. One of the collectors of black letter books, a few months ago purchaſed Hebrew manuſcript for a Caxton, and as he never reads, it anſwered his purpoſe quite as well. The ſame gentleman has a great collection of Nanking, and other old china, much of which was imported into this country *before* we had any commerce with the Eaſt Indies.

We have collectors of periwigs and tobacco-pipes: one of theſe gentlemen lately gave a conſiderable ſum for the black wig, which was worn by Charles II; and the other paid a high price for the tube out of which the auctioneer *poſitively* aſſerted ſir Walter Raleigh ſmoked his firſt pipe of *beſt Virginia*. We have alſo collectors of tobacco-papers and meſſage cards;

and at an auction, not long ago, upward of two and twenty thouſand, which, at great coſt, a collector had got together, and with great pains had paſted in a port-folio, were, upon his demiſe, brought under the hammer, and, ſtrange to tell, ſold for ſeven ſhillings and ſixpence!—not one third of the expence of paſting them into the book. The meſſage cards and ſhop bills are got together merely to ſhew where the traders and men of rank lived, from the earlieſt appearance of civilization in this country.

There is another ſet of learned critics, who collect all the cancelled leaves; theſe will ſhew the firſt thoughts of our firſt writers, and prove by their alterations that ſecond thoughts are beſt. As to collectors of pictures, Bramſton has deſcribed thoſe who lived in his time, and it exactly agrees with thoſe who live in this:

'In curious paintings I'm exceeding nice,
And know their ſeveral beauties by their price.
Auctions and ſales I conſtantly attend,
But chooſe my pictures by a ſkilful friend.
Originals and copies much the ſame,
The picture's value is the painter's name.'

CHARACTERS.

So predominant is vanity, that the world in general have denied to any man the right of drawing his own character; and where that right has been aſſumed, every ſuch character has been received with doubt, and read with a ſuſpicious allowance for human vanity. Although, however, it may be difficult for the beſt of men ſo to diveſt themſelves, for a ſhort time, of this common infirmity of our nature, as to draw an exact and faithful portrait of themſelves, yet there are ſome inſtances that may be quoted as exceptions to this rule. Beſide thoſe who have written their own lives, and have recorded their failings and vices, as well as virtues, there are ſome who have given a detached portrait, which even their enemies have not been able to find any very material fault with. Such was the very celebrated

ERASMUS,

who, in a letter to his friend dean Colet, ſpeaks thus: that could he find any thing commendable in himſelf, he ſhould be proud of being commended by ſuch a worthy perſon, to whoſe judgment he allowed ſo great a weight, that his ſilent eſteem alone had been preferable to all the applauſes of a theatre at Rome. But, however, the commendations given him by ſuch a perſon were ſo far from exalting him in his own conceit, that he was rather mortified by them; for they only put him in mind of what he ought to be: that, for his part, he beſt knew his own failings; and therefore would preſume to give a character of himſelf. 'You have in me,' ſays he, 'a man of little or no fortune, a ſtranger to ambition, a mighty well-wiſher to love and friendſhip; a ſort of novice in learning, but yet a great admirer thereof; one who has a profound veneration for any excellence in others, as conſcious of the want of it in himſelf; who can eaſily yield to any one in learning, to none in integrity: a man, ſincere, open, free, a hater of falſehood and diſſimulation; of a mind lowly and upright, from whom nothing is to be expected, beſide an honeſt heart. If, my dear Colet, you can love ſuch a man, and think him worthy of your friendſhip, you may account me your own as effectually as any thing you can call your own.'

Another very recent inſtance we have in one of a very different deſcription from Eraſmus, but who has not unjuſtly acquired a conſiderable reputation in the world, as the companion and biographer of Samuel Johnſon,

JAMES BOSWELL,

who, in his Journal, delineates himſelf thus: 'I have,' ſays he, 'given a ſketch of Dr. Johnſon. My readers may wiſh to know a little of his fellow-traveller. Think, then, of a gentle-

man of ancient blood, the pride of which was his predominant paſſion. He was then in his thirty-third year, and had been about four years happily married. His inclination was to be a ſoldier; but his father, a reſpectable judge, had preſſed him into the profeſſion of the law. He had travelled a good deal, and ſeen many varieties of human life. He thought more than any body ſuppoſed, and had a pretty good ſtock of general learning and knowledge. He had all Dr. Johnſon's principles, with ſome degree of relaxation. He had rather too little than too much prudence; and, his imagination being lively, he often ſaid things of which the effect was very different from the intention. He reſembled ſometimes,

'The beſt good man, with the worſt natured muſe.'

In this character there certainly is nothing overcharged; and Dr. Johnſon ſaid of him, that he was one, 'whoſe acuteneſs would help my inquiry, and whoſe gayety of converſation, and civility of manners, are ſufficient to counteract the inconveniencies of travel, in countries leſs hoſpitable than we have paſſed.'—To theſe we may add the examples of David Hume, Rouſſeau, and many others.

CHARACTER *of Mr.* JAMES BEATTIE.

To the Editor of the Univerſal Magazine.

Sir,

I have nearly come to the Concluſion of the Extracts from the unpubliſhed Works of Mr. Beattie, *which, I flatter myſelf, have done Credit to your Miſcellany. There is one yet remaining, which I would have ſent to you, but that I am of Opinion that it ought properly to be prefaced by ſome Account of his Character, drawn up by the elegant and inſtructive Pen of his learned Father. After giving ſome Particulars of his Life, he adds the following Character.*

OF his character and opinions I ſhall ſubjoin ſome further particulars, which could not be conveniently introduced in the preceding narrative. I ſet them down as they occur, without attempting arrangement.

Piety and meekneſs were ſtriking features in his character, habitual to him in infancy, and through life. I find among his papers forms of devotion, compoſed for his own uſe, of which I may perhaps give a ſpecimen. The Chriſtian religion, and its evidences, he had ſtudied with indefatigable application; and the conſequence was ſuch, as may be always expected in like caſes, where the inquirer has candour and ſenſe: no perſon could love his religion more than he did, or believe in it with fuller aſſurance of faith. But in his behaviour there was no auſterity or ſingularity. Even when he came to be a man, he had, when in health, and in the company of his intimate friends, all the playfulneſs of a boy. The effect of religion upon his mind was, to make him cheerful, conſiderate, benevolent, intrepid, humble, and happy. Of the contracted principles and unamiable prejudices of ſectaries he had no conception. He loved all the human race; he bore a particular love to all Chriſtians; and he wiſhed all parties to exerciſe Chriſtian charity toward each other. The church of England he held in high veneration, and was alſo attached to the church of Scotland, in which he had been educated; he knew that, in reſpect of doctrine, the principles of both are the ſame; and, as to the different forms of eccleſiaſtical diſcipline

and worſhip, he did not think he had any right to affect ſingularity, or to moleſt the peace of either church by clamouring about matters of no eſſential importance. He wiſhed to be, and to be conſidered as, a Chriſtian; a title, which he thought infinitely more honourable than any other. The words Lutheran and Calviniſt he well underſtood, but ſet no value on them; though he was ever ready to own his obligations to thoſe learned men, who had been inſtrumental in bringing about the reformation from popery.

Of modern divines his greateſt favourite was Dr. Clarke. He ſtudied all that author's works with his uſual accuracy, and with much delight. Even the controverſy with Dodwell he ſtudied; for he thought it ſtrictly connected with what Baxter and others had taught concerning the incorporeal nature of the ſoul: a doctrine, of which he was a zealous defender; which he had examined as far, I believe, as human ingenuity can examine it; and on which he has left a great deal in writing, though nothing finiſhed. I need not add, for after what has been ſaid it will be naturally ſuppoſed, that he was a warm admirer of Dr. Campbell's excellent writings, and very judicious 'Tranſlation of the Goſpels.'

I ſpoke of his playfulneſs. In converſation with his particular friends, he would diſplay an amazing exuberance of pleaſantry and humour. His knowledge of nature, and extenſive learning, ſupplied him with innumerable images; and his lively fancy, aided by ſimplicity of diction and a ready eloquence, enabled him to combine them into the moſt diverting forms that could be imagined. He had, what perhaps all people of obſervation have, a ſlight tendency to ſatire; but it was of the gentleſt kind; he had too much candour and good nature to be either a general ſatiriſt or a ſevere one. That taunting, gibing raillery, which ſome people, who miſtake ill-nature for wit, are ſo fond of, he deſpiſed and hated: he often, as his duty required, ſpoke in order to improve and amend others; but never uttered a word with a view to give pain. Characters, however, there were, of which he was at no pains to conceal what he thought. If perſons, notoriouſly profligate; or who in public office ſeemed to him to have betrayed their truſt; or who, rendered impudent by immorality and ignorance, ventured to retail the wretched impieties of infidelity;—if ſuch perſons happened to be ſpoken of in his hearing, it was eaſy to perceive, that his abſtaining from general ſatire was owing to the want, not of talents, but of inclination.

I mentioned that acuteneſs of intellect, which enabled him to enter with facility into the abſtruſeſt doctrines of the abſtract philoſophy. He poſſeſſed a talent ſtill more uſeful, in which men of acute minds are ſometimes deficient; and that was good ſenſe. He could inſtantly, and almoſt intuitively, diſcern what in human conduct was right or wrong, prudent or imprudent; not only in matters of morality and ſcience, but in the general intercourſe of the world. Of his ſuperiority in this talent, I was ſo ſenſible, that, during the laſt four or five years of his life, I ſeldom reſolved on any thing that had difficulty in it, without conſulting him; and I never went wrong by following his advice.

The delicacy (I may even call it the purity) of his mind was greater than I have known in any other man, at leaſt in any other young man; and, in one ſo young, (*he died at* 22) was truly admirable, and worthy of imitation. He was aware of the danger of admitting indelicate or improper thoughts into his mind; for he knew that aſſociations of ideas, diſapproved both by reaſon as incongruous, and by conſcience as immoral, might in a moment be formed, in conſequence of inattention, even when there was no ſettled propenſity to evil. To give an example or two of this delicacy, that my meaning may be underſtood (one cannot be very explicit on this ſubject) ſuch a book as

that moſt contemptible one called '*Scotch Preſbyterian Eloquence diſplayed*,' he would not have looked into on any account whatever; becauſe he had heard, that paſſages of ſcripture are introduced in it, for the purpoſe of raiſing laughter. Silly tales and jokes of the ſame nature he would ſometimes hear in company, (they are too often heard from thoſe of whom better things might be expected) but he alway ſhowed diſpleaſure at hearing, and never repeated them. And, notwithſtanding his love of the talent called *Humour*, he would never read '*The Tale of a Tub*;' becauſe he had heard me ſay, that there are in it groſs indecencies; and that, by forming ludicrous aſſociations of the meaneſt ideas with the moſt awful truths of religion, it could hardly fail, in ſome degree, to diſorder and debaſe the mind. I did not tell him this, or any thing elſe, in a dictatorial manner; nor did I ever forbid him to read that book. But his attention was continually awake, to learn, although from the ſlighteſt hint, or moſt trivial circumſtance, what might be uſeful in purifying his mind, regulating his conduct, or improving his underſtanding.

Thus formed, thus enlightened, and thus inured to conſideration, a mind poſſeſſed of ſenſibility can never be deficient in taſte or critical ſagacity. In this reſpect he was highly accompliſhed; of which, however, it is no proof to ſay, that at the age of eighteen he was a better judge of compoſition than I had been at thirty. It may be thought, that I would not neglect to explain to him the principles of good writing, as far as I knew them; and this part of my duty I did not neglect: but my diligence in it bore no proportion to his proficiency; which I impute to his natural rectitude of underſtanding, aided by conſtantly reading the beſt authors, and abſtaining, as he ſcrupulouſly did, from ſuch as fall below, or do not riſe above, mediocrity. They, who may be pleaſed to ſay, that at this rate he muſt have kept at a diſtance from what I have attempted in writing, are at liberty to think ſo. To me, and to every thing connected with me, he was partial, as I have acknowledged already; and they who underſtand human nature will not think the worſe of him, either as a man, or as a critic, for having had this infirmity. A diſlike of *ambitious ornaments*, and what I might almoſt call, an *abhorrence* of oſtentation, appeared in him very early in life; and were heightened and confirmed by ſtudying thoſe ancient writers, particularly Homer, Xenophon, Herodotus, Cæſar, and others, who are diſtinguiſhed by a ſevere and majeſtic ſimplicity of ſtyle.

When he began to learn the French language, of which, under an experienced teacher, he acquired very exactly the elements and pronunciation, I, remembering with what delight I had in my youth read *Telemaque*, recommended that work to his peruſal, and told him he would be highly entertained with it. In this, however, I was miſtaken. After going through one half, he begged I would not inſiſt on his reading the other, at leaſt, at preſent. 'I acknowledge,' ſaid he, 'the author's merit as a politician and moraliſt, and I believe he writes the French tongue in its utmoſt purity; but I have been ſtudying Homer's Odyſſey, the ſimplicity of which delights me; and with this impreſſion on my mind, I cannot juſt now reliſh the flowery deſcriptions of Fenelon.' He mentioned other objections, which I need not repeat. I ſaid, he might lay Telemaque aſide, till he found himſelf diſpoſed to reſume it, and in the mean time return to his Homer; for whoſe ſimplicity and grandeur I was much pleaſed to find that he had a true taſte. He was about fifteen when this little conference paſſed. It may give moderniſh readers a mean opinion of his judgment: on thoſe who have converſed, as he had, with ancient authors, it may perhaps have a contrary effect.

Time was not allowed him for go-

ing deep into the literature of France: his favourite authors of that nation were Moliere and Boileau. Of Rouſſeau he knew little; and ſuch was his opinion of Voltaire's principles and character, that he had no curioſity to inquire after his books. Of the French tongue he ſeemed to think, that its want of harmony, and being almoſt entirely made up of idiomatic phraſes, rendered it unfit for the higher poetry, and for elevated compoſition in general; but he did not think himſelf ſufficiently ſkilled in it to pretend to judge of its merits. Italian, which he would probably have found more to his mind, he meant to ſtudy, but did not live to do it.

He was a maſter of Greek and Latin; and in getting thoſe languages was much aided by his ſkill in the grammatical art: without which it is indeed impoſſible (though projectors have thought otherwiſe) to learn them with accuracy; and, if they are not accurately learned, the acquiſition is not of great value. I find, by his papers, that he had exerciſed himſelf a little in Greek compoſition, which I believe is not often done in Scotland. Latin he ſpoke correctly and readily. In that language, he and I ſometimes converſed when we were by ourſelves; and he ſoon became my ſuperior in this, as in every other talent. Moſt of the things I have publiſhed of late years were ſubmitted in manuſcript to his reviſal, and received from him valuable emendations. What he propoſed in this way I never ſaw reaſon to reject.

By ſome people, more prompt to ſpeak and prone to cenſure, than acute to obſerve, his character was miſtaken. They imputed his modeſty to timorouſneſs; and thought, or ſaid at leaſt, that I kept him ſecluded from ſociety, obliged him to apply too much to books, and gave him no opportunities of knowing the world. In juſtice both to him and to myſelf, I muſt enter into ſome particulars on this ſubject.

When at home, indeed, he was not frequently ſeen in the ſtreet; a laudable regard to health, and a paſſionate love of rural ſcenery, leading him to daily excurſions in the fields: it is alſo true, that of tea-tables he was no regular frequenter; and that at card-tables and in ball-rooms (things of no ſmall importance in a country town) he never appeared at all. By the intelligent reader, after what he has heard of him, it will not be ſuppoſed, that this was the effect of any reſtraint on my part: on the contrary, it would have been unreaſonable and cruel reſtraint, if in theſe things I had not readily complied, as I conſtantly did, with his inclination.

But I doubt, whether any other young man in North Britain, of his years and ſtation, had better opportunities than he, of ſeeing what is called the world; and a more accurate, or more ſagacious, obſerver of it, I have not known. He never was in a foreign country: but in England and Scotland, his acquaintance was nearly as extenſive as mine; and to many perſons, in both countries, of great diſtinction in rank and literature, he had the honour to be known, and to be indebted for particular civilities. To give a liſt of names may be thought to ſavour of vanity rather than of gratitude; yet it is not improbable that gratitude may one day induce me to give ſuch a liſt.—Of the principles on which I conducted his education, and of his own opinion of thoſe principles, I leave the candid reader to judge from the preceding narrative.

In infancy, his health was very delicate, and he was ſomewhat timorous; not more ſo, however, than well-natured children, who fear to offend, commonly are. But his piety and good ſenſe, the manly exerciſes in which he delighted, and his being ſo early accuſtomed to the uſe of arms, got the better of that timidity; ſo that, before he grew up to manhood, he was as fearleſs as a man ought to be. I know not any one on whoſe fortitude I could have confided more,

on any perilous emergency. Several times I have ſeen him in danger; once particularly in Yarmouth roads, when every perſon on board our veſſel, every perſon at leaſt who was on the upper deck, imagined it was on the point of foundering. I took him by the hand, made him ſwallow a glaſs of wine; and, on looking at him, ſaw his countenance perfectly undiſmayed, and I believe more compoſed than any other in the ſhip. He was then in his ſixteenth year.

It was alſo ſuppoſed by ſome, that as he was often ſeen walking alone, or with me, and ſeldom or never with more than one companion, that he muſt be of an unſocial diſpoſition. The reverſe was his character; he was ſocial, cheerful, and affectionate, and by thoſe friends who thoroughly knew him, beloved even to enthuſiaſm. In his choice of friends, indeed, he was not haſty. For, in diſcerning characters, he was, as already obſerved, ſingularly perſpicacious; and the ſlighteſt appearance of immorality, vanity, pedantry, coarſe manners, or blameable levity, diſguſted him; though he ſhewed his diſguſt by his ſilence only, or withdrawing from the company.

He had a paſſion for viſiting places that had been remarkable as the abodes of eminent men, or that retained any memorials of them; and as in this I reſembled him, we often walked together on what he called claſſic ground. Weſtminſter-abbey, in the neighbourhood of which we lived ſeveral months, was a favourite haunt of his, and ſuggeſted many images and meditations. He had wandered in the bowers of Twickenham, and amid the majeſtic ſcenes of Blenheim and Windſor. At Oxford, where we paſſed ſome time, he met with many intereſting objects, and attentive friends. He kiſſed (literally he did ſo) the graveſtone which covers the duſt of Shakſpeare at Stratford; and ſat in the chimney corner, and in the ſame chair, in which tradition tells that the immortal bard was wont to ſit. He once or twice viſited the village, the houſe, and even the chamber (near Coltſworth in Lincolnſhire) in which ſir Iſaac Newton is ſaid to have been born. The laſt time he and I were in Cambridge, I gratified him with a ſight of thoſe apartments in Pembroke-hall, which were once honoured with the reſidence of my memorable and long-lamented friend Mr. Gray; of whom he was a warm admirer, thinking him the greateſt poetical genius that Britain had produced ſince Milton. He compoſed an ode, inſcribed 'To the Genius of Gray,' of which I find among his papers a few ſtanzas; but the far greater part is irrecoverably loſt. This ode, I think, he wrote, or planned, while we were paſſing ſome time, in 1787, at Windſor; where, from the terrace, he had a view of Stoke church, in which Gray is buried, and toward which I often found him directing his eyes.

When his curioſity was raiſed with reſpect to any work of art, he always wiſhed to make himſelf maſter, at leaſt, of the theory of it. In his early days he was ſkilled in various ſorts of legerdemain; but left it off entirely, as trifling in itſelf, and oſtentatious in the performance. One evening of his thirteenth year, he and I arrived in Newark on Trent, juſt as an exhibition of fireworks was beginning in the market-place. It was indeed a magnificent ſpectacle, and the firſt of the kind he had ever ſeen. He immediately reſolved to ſtudy fireworks; and, finding in London a ſyſtematic book on the ſubject, applied to it ſo ſucceſsfully, that, for ſeveral years after, he would now and then exhibit in that way, for the amuſement of his friends.

Among his Latin memorandums, there is a reſolution, never to engage in games of chance! Cards he deteſted; as deſtructive of time, at leaſt, if not of money: which in him I thought the more remarkable, as he had, when a boy, learned (I know not how) to play at what is called *quadrille*, and ſome other games. In

thoſe days, he often urged me to play at cards, ſaying, he was ſure it would amuſe me. I told him, I had ſeveral times attempted quadrille; but that, of the directions given me, ſome I could never underſtand, and ſome I could never remember. He begged leave to write a few directions; and I gave him leave, being curious to know, how a lad of eleven years of age would acquit himſelf in reſpect of ſtyle, and the arrangement of his matter. He brought me two treatiſes, (ſtill extant) one of quadrille, the other of backgammon, written with a propriety, perſpicuity, and correctneſs, that very agreeably ſurpriſed me. I could not help telling him, as was true, that I underſtood them much better than any oral information I had ever received on thoſe topics.

There is another faſhionable recreation, to which he could not reconcile his mind, the reading of romances. The time employed in that way he held to be loſt. Don Quixote, however, Robinſon Cruſoe, and Cecilia, he read with pleaſure, and began, but could not get through, Gil Blas. Hearing that an acquaintance of his had almoſt had his brain turned with the Adventures of Roderick Random, he had the curioſity to aſk for that book, but quickly laid it aſide, and would never afterward reſume it. To amuſe ſome hours of languor, in the commencement of his laſt illneſs, I adviſed him to look into Fielding: and he read Tom Jones, and, I think, Amelia. He gave that author no little praiſe for his humour, for the very ſkilful management of his fable, the variety and contraſt of his characters, and, with a few exceptions, for the beautiful ſimplicity of his ſtyle: but ſtill—the time ſpent in reading it was loſt; and there was more danger from the indelicacy of particular paſſages, than hope of its doing good by the ſatire, the moral ſentiments, or the diſtributive juſtice diſpenſed in winding up the cataſtrophe.

Dr. B. concludes this ſketch of his ſon's character in theſe affecting words.

'I have loſt the pleaſanteſt, and for the laſt four or five years of his ſhort life, one of the moſt inſtructive companions, that ever man was delighted with. But—The Lord gave; the Lord hath taken away; bleſſed be the name of the Lord—I adore the Author of all good, who gave him grace to lead ſuch a life, and die ſuch a death, as makes it impoſſible for a Chriſtian to doubt of his having entered upon the inheritance of a happy immortality.'

COMPARISON *between* GESSNER *and* THEOCRITUS*.

THE comparative merits of Geſſner and Theocritus are thus ſtated by a German critic. Geſſner has created to himſelf a paſtoral world, which he has peopled with the moſt amiable and happy children of the golden age. Theſe are forms of his own imagination, the conceptions of a noble and enlightened mind, and rather moral beings than men; we dare ſcarcely look upon his ſhepherds as *brothers*, and the kiſs of his ſhepherdeſſes appears too pure for our lips. The ſhepherds of Theocritus are more the creatures of paſſion, and their inclinations more ſenſual; their innocence is that of the children of nature in the firſt ages of mankind, before knowledge had refined, or civilization corrupted them: miſchievous without wickedneſs, and headſtrong without baſeneſs, they always intereſt us, and preſerve ſome claim to our regard, even when they offend againſt the moral ſenſe of the preſent period. The ſhepherds of Geſſner are beings of a rank ſuperior to human nature: to all the ſimplicity of

* See Memoirs of the Life and Writings of Geſſner, with his Portrait, in our Magazine for June 1789.

the infancy of the world, they unite the moſt delicate ſentiments of the cultivated man. The nobleneſs of their heart is no acquired quality, but their birth-right; the delicacy of their ſentiments appears to be innate, and the ſame virtuous tendencies of mind appear to be natural to them all. The paſtoral world of Geſſner, is ſituate under a moſt happy climate, deſcribed in glowing colours; the ſun of gold and the moon of ſilver ſhine with the livelieſt luſtre; and the inhabitants are worthy of ſo happy an abode. Their love is as pure as ether: their heart, troubled by no care, may be compared to that limpid ſpring which glides from a rock into a baſin of marble. To do good, is their daily occupation; and the beauty of nature, filial affection, the praiſe of the divinity, and eulogies on all the peaceful virtues, are the ſubjects of their ſongs. The moſt diſſolute fawn of Geſſner, is wiſer than the ſhepherds of Theocritus.

The character of the ſhepherds of Geſſner is, doubtleſs, a general character. What relates to one perſon, appears to belong equally to another. Their peace, ruffled by no paſſion, preſents us with no individual traits of character: the ſentiments of one are thoſe of all the reſt; and we cannot help perſuading ourſelves that we behold all along, only one and the ſame being under different relations. Hence repetitions and a fatiguing uniformity appear to be inevitable; and yet with what art has he not contrived to avoid them! What different ſcenes ſucceed each other! What varieties of ſituation! What diſtinct pictures of virtue, love, compaſſion, and tenderneſs, has he not deſcribed! With what ſweetneſs does infancy liſp the ſame ſentiment which youth utters with ardour, manhood with rapture, and old age with peaceful joy! What an inexhauſtible fund of images! What diverſity in the points of view! What richneſs throughout! And how does he revive, under new forms, the ſentiments which he conveys!

He who conſiders Geſſner as a painter, and who contemplates judiciouſly ſome of his beſt pieces, will find occaſion to make the ſame remark. Is it not when he deſcribes from his imagination, that he is moſt admirable? Woods, temples, edifices in the nobleſt ſtyle, monuments falling to ruin, nymphs bathing, little ſatyrs who mingle in the dance with young ſhepherds, theſe are the chief images of his moſt beautiful landſcapes. The ſame character pervades the whole, and yet every thing appears under different views. All breathe the ſame genius; and yet one part does not ſeem to be the copy of the other. He, who can deſcribe with ſuch glowing colours, the pictures of the imagination, may expect that his name ſhall laſt for a ſeries of ages, as that of Geſſner, and will, like him, be admired and loved by all nations. No poet of the ſentimental kind can ſo eaſily draw from our eyes the tears of ſympathy, nor preſerve throughout ſo dignified a tone, free from all affectation of ſentiment. No poet unites with the ſofteſt delicacy ſuch elevation of ſtyle, and ſo manly an underſtanding. The grace of his poetry reſembles the amiable negligence of the ſhepherdeſs, and his ſimplicity, the delicate bluſh which the firſt kiſs awakens upon her countenance. Theocritus and Geſſner! both great and original in their kind! which of them will gain the prize in the contention? All depends on the character of the judges. If Pan muſt decide, Theocritus will obtain the crown of fir. If Apollo be the judge, he will crown Geſſner with roſes, bathed in the tears of Aurora.

Curious PARTICULARS *in the* NATURAL HISTORY *of* BIRDS.

[From 'A Naturaliſt's Calendar, with Obſervations in various Branches of Natural Hiſtory:' compiled by Dr. Aikin; from the Papers of the late Rev. Gilbert White, M. A. of Selborne, Hants.]

BIRDS in GENERAL.

IN ſevere weather, fieldfares, red wings, ſky larks, and tit larks reſort to watered meadows for food; the latter wades up to its belly in purſuit of the pupæ of inſects, and runs along upon the floating graſs and weeds. Many gnats are on the ſnow near the water, theſe ſupport the birds in part.

Birds are much influenced in their choice of food by colour, for though white currants are a much ſweeter fruit than red, yet they ſeldom touch the former till they have devoured every bunch of the latter.

Red-ſtarts, fly-catchers and black-caps arrive early in April. If theſe little delicate beings are birds of paſſage, (as we have reaſon to ſuppoſe they are, becauſe they are never ſeen in winter) how could they, feeble as they ſeem, bear up againſt ſuch ſtorms of ſnow and rain, and make their way through ſuch meteorous turbulencies, as one ſhould ſuppoſe would embarraſs and retard the moſt hardy and reſolute of the winged nation? Yet they keep their appointed times and ſeaſons; and in ſpite of froſts and winds return to their ſtations periodically as if they had met with nothing to obſtruct them. The withdrawing and appearance of the ſhort winged ſummer birds is a very puzzling circumſtance in natural hiſtory!

When the boys bring me waſps neſts, my bantam fowls fare deliciouſly, and when the combs are pulled to pieces, devour the young waſps in their maggot ſtate with the higheſt glee and delight. Any inſect-eating bird would do the ſame; and therefore I have often wondered that the accurate Mr. Ray ſhould call one ſpecies of buzzard *buteo apivorus ſive veſpivorus*, or the honey buzzard, becauſe ſome combs of waſps happened to be found in one of their neſts. The combs were conveyed thither doubtleſs for the ſake of the maggots or nymphs, and not for their honey: ſince none is to be found in the combs of waſps. Birds of prey occaſionally feed on inſects: thus have I ſeen a tame kite picking up the female ants full of eggs, with much ſatisfaction.

ROOKS.

ROOKS are continually fighting and pulling each others neſts to pieces: theſe proceedings are inconſiſtent with living in ſuch cloſe community. And yet if a pair offers to build on a ſingle tree, the neſt is plundered and demoliſhed at once. Some rooks rooſt on their neſt trees. The twigs which the rooks drop in building ſupply the poor with bruſh-wood to light their fires. Some unhappy pairs are not permitted to finiſh any neſt till the reſt have completed their building. As ſoon as they get a few ſticks together, a party comes and demoliſhes the whole. As ſoon as rooks have finiſhed their neſts, and before they lay, the cocks begin to feed the hens, who receive their bounty with a fondling, tremulous voice, and fluttering wings, and all the little blandiſhments that are expreſſed by the young while in a helpleſs ſtate. This gallant deportment of the males is continued through the whole ſeaſon of incubation. Theſe birds do not copulate on trees, nor in their neſts, but on the ground in open fields.

THRUSHES.

THRUSHES during long droughts are of great ſervice in hunting out ſhell ſnails, which they pull in pieces for their young, and are thereby very ſerviceable in gardens.

Miſſel thruſhes do not deſtroy the fruit in gardens like the other ſpecies

of turdi, but feed on the berries of miſſeltoe, and in the ſpring on ivy berries which then begin to ripen. In the ſummer, when their young become fledged, they leave neighbourhoods, and retire to ſheep walks and wild commons.

The magpies, when they have young, deſtroy the broods of miſſel thruſhes, though the dams are fierce birds, and fight boldly in defence of their neſts. It is probably to avoid ſuch inſults, that this ſpecies of thruſh, though wild at other times, delights to build near houſes, and in frequented walks, and gardens.

Land Rail.

A man brought me a land-rail or daker-hen, a bird ſo rare in this diſtrict, that we ſeldom ſee more than one or two in a ſeaſon, and thoſe only in autumn. This is deemed a bird of paſſage by all the writers: yet from its formation ſeems to be poorly qualified for migration; for its wings are ſhort, and placed ſo forward, and out of the centre of gravity, that it flies in a very heavy and embarraſſed manner, with its legs hanging down; and can hardly be ſprung a ſecond time, as it runs very faſt, and ſeems to depend more on the ſwiftneſs of its feet than on its flying.

When we came to draw it, we found the entrails ſo ſoft and tender that in appearance they might have been dreſſed like the ropes of a woodcock. The craw or crop was ſmall and lank, containing a mucus; the giszard thick and ſtrong, and filled with ſmall ſhell ſnails, ſome whole, and many ground to pieces through the attrition which is occaſioned by the muſcular force and motion of that inteſtine. We ſaw no gravels among the food: perhaps the ſhell ſnails might perform the functions of gravels or pebbles, and might grind one another. Land-rails uſed to abound formerly, I remember, in the low wet bean fields of Chriſtian-Malford in North Wilts, and in the meadows near Paradiſe gardens at Oxford, where I have often heard them cry crex, crex. The bird mentioned above weighed 7½ oz. was fat and tender, and in flavour like the fleſh of a woodcock. The liver was very large and delicate.

Food of the Ring Dove.

One of my neighbours ſhot a ring-dove on an evening as it was returning from feed and going to rooſt. When his wife had picked and drawn it, ſhe found its craw ſtuffed with the moſt nice and tender tops of turnips. Theſe ſhe waſhed and boiled, and ſo ſate down to a choice and delicate plate of greens, culled and provided in this extraordinary manner.

Hence we may ſee that graminivorous birds, when grain fails, can ſubſiſt on the leaves of vegetables. There is reaſon to ſuppoſe that they would not long be healthy without, for turkies, though corn fed, delight in a variety of plants, ſuch as cabbage, lettuce, endive, &c. And poultry pick much graſs; while geeſe live for months together on commons by grazing alone.

'Nought is uſeleſs made;
On the barren heath
The ſhepherd tends his flock that daily crop
Their verdant dinner from the moſſy turf
Sufficient: after them the cackling gooſe,
Cloſe-grazer, finds wherewith to eaſe her want.'

Philips' Cyder.

Hen Harrier.

Mr. White of Newton, ſprung a pheaſant in a wheat ſtubble, and ſhot at it; when, notwithſtanding the report of the gun, it was immediately purſued by the blue hawk, known by the name of the hen-harrier, but eſcaped into ſome covert. He then ſprung a ſecond, and a third, in the ſame field, that got away in the ſame manner; the hawk hovering round him all the while that he was beating the field, conſcious no doubt of the game that lurked in the ſtubble. Hence we may conclude that this bird of prey was rendered very daring and

bold by hunger, and that hawks cannot always ſeize their game when they pleaſe. We may farther obſerve, that they cannot pounce their quarry on the ground where it might be able to make a ſtout reſiſtance, ſince ſo large a fowl as a pheaſant could not but be viſible to the piercing eye of a hawk when hovering over a field. Hence that propenſity of cowring and ſquatting till they are almoſt trod on, which no doubt was intended as a mode of ſecurity: though long rendered deſtructive to the whole race of gallinæ by the invention of nets and guns.

GREAT SPECKLED DIVER, or LOON.

As one of my neighbours was traverſing Wolmer foreſt from Bramſhot acroſs the moors, he found a large uncommon bird fluttering in the heath, but not wounded, which he brought home alive. On examination it proved to be *Colymbus glacialis Linn:* the great ſpeckled diver or loon, which is moſt excellently deſcribed in Willughby's ornithology.

Every part and proportion of this bird is ſo incomparably adapted to its mode of life, that in no inſtance do we ſee the wiſdom of God in the creation to more advantage. The head is ſharp, and ſmaller than the part of the neck adjoining, in order that it may pierce the water; the wings are placed forward and out of the center of gravity, for a purpoſe which ſhall be noticed hereafter; the thighs quite at the podex, in order to facilitate diving; and the legs are flat, and as ſharp backward almoſt as the edge of a knife, that in ſtriking they may eaſily cut the water; while the feet are palmated, and broad for ſwimming, yet ſo folded up when advanced forward to take a freſh ſtroke, as to be full as narrow as the ſhank. The two exterior toes of the feet are longeſt; the nails flat and broad reſembling the human, which give ſtrength and increaſe the power of ſwimming. The foot, when expanded, is not at right angles to the leg or body of the bird: but the exterior part inclining toward the head forms an acute angle with the body; the intention being not to give motion in the line of the legs themſelves, but by the combined impulſe of both in an intermediate line, the line of the body.

Moſt people know, that have obſerved at all, that the ſwimming of birds is nothing more than a walking in the water, where one foot ſucceeds the other as on the land; yet no one, as far as I am aware, has remarked that diving fowls, while under water, impel and row themſelves forward by a motion of their wings, as well as by the impulſe of their feet: but ſuch is really the caſe, as any perſon may eaſily be convinced who will obſerve ducks when hunted by dogs in a clear pond. Nor do I know that any one has given a reaſon why the wings of diving fowls are placed ſo forward; doubtleſs, not for the purpoſe of promoting their ſpeed in flying, ſince that poſition certainly impedes it; but probably for the increaſe of their motion under water, by the uſe of four oars inſtead of two; yet were the wings and feet nearer together, as in land birds, they would, when in action, rather hinder than aſſiſt one another.

This Colymbus was of conſiderable bulk, weighing only three drachms ſhort of three pounds avoirdupois. It meaſured in length from the bill to the tail (which was very ſhort) two feet; and to the extremities of the toes four inches more; and the breadth of the wings expanded was forty-two inches. A perſon attempted to eat the body, but found it very ſtrong and rancid, as is the fleſh of all birds living on fiſh. Divers or Loons, though bred in the moſt northerly parts of Europe, yet are ſeen with us in very ſevere winters; and on the Thames are called ſprat loons, becauſe they prey much on that ſort of fiſh.

The legs of the Colymbi and Mergi are placed ſo very backward, and ſo out of all center of gravity, that theſe birds cannot walk at all. They are

called by Linnæus *compedes*, becauſe they move on the ground as if ſhackled, or ſettered.

Stone Curlew.

On the 27th of February 1768, Stone Curlews were heard to pipe; and on March 1ſt, after it was dark, ſome were paſſing over the village, as might be perceived by their quick ſhort note, which they uſe in their nocturnal excurſions by way of watch-word, that they may not ſtray and loſe their companions.

Thus, we ſee, that retire whitherſoever they may in the winter, they return again early in the ſpring, and are, as it now appears, the firſt ſummer birds that come back. Perhaps the mildneſs of the ſeaſon may have quickened the emigration of the curlews this year.

They ſpend the day in high elevated fields and ſheep-walks; but ſeem to deſcend in the night to ſtreams and meadows, perhaps for water, which their upland haunts do not afford them.

The smallest Willow Wren.

The ſmalleſt uncreſted or willow wren, or chiff chaf, is the next early ſummer bird which we have remarked; it utters two ſharp piercing notes, ſo loud in hollow woods as to occaſion an echo, and is uſually firſt heard about the 20th of March.

Fern Owl, or Goat Sucker.

The country people have a notion that the fern-owl, or churn-owl, or eve-jarr, which they alſo call a puckeridge, is very injurious to weanling calves, by inflicting, as it ſtrikes at them, the fatal diſtemper known to cow-leeches by the name of puckeridge. Thus does this harmleſs, ill-fated bird fall under a double imputation, which it by no means deſerves; in Italy, of ſucking the teats of goats, whence it is called *caprimulgus*; and with us, of communicating a deadly diſorder to cattle. But the truth of the matter is, the malady above-mentioned is occaſioned by the *æſtrus bovis*, a dipterous inſect, which lays its eggs along the chines of kine, where the maggots, when hatched, eat their way through the hide of the beaſt into the fleſh, and grow to a very large ſize. I have juſt talked with a man, who ſays, he has more than once ſtripped calves who have died of the puckeridge; that the ail or complaint lay along the chine, where the fleſh was much ſwelled, and filled with purulent matter. Once I myſelf ſaw a large rough maggot of this ſort ſqueezed out of the back of a cow.

Theſe maggots in Eſſex are called wornils.

The leaſt obſervation and attention would convince men, that theſe birds neither injure the goatherd nor the grazier, but are perfectly harmleſs, and ſubſiſt alone, being night birds, on night inſects, ſuch as *ſcarabæi* and *phalænæ*; and through the month of July moſtly on the *ſcarabæus ſolſtitialis*, which in many diſtricts abounds at that ſeaſon. Thoſe that we have opened, have always had their craws ſtuffed with large night-moths and their eggs, and pieces of chaffers: nor does it anywiſe appear how they can, weak and unarmed as they ſeem, inflict any harm upon kine, unleſs they poſſeſs the powers of animal magnetiſm, and can affect them by fluttering over them.

A fern owl, this evening, (Auguſt 27) ſhowed off in a very unuſual and entertaining manner, by hawking round and round the circumference of my great ſpreading oak, for twenty times following, keeping moſtly cloſe to the graſs, but occaſionally glancing up amid the boughs of the tree. This amuſing bird was then in purſuit of a brood of ſome particular phalæna belonging to the oak, of which there are ſeveral ſorts; and exhibited on the occaſion a command of wing ſuperior, I think, to that of the ſwallow itſelf.

When a perſon approaches the haunt of fern-owls in an evening, they continue flying round the head of the

intruder, and by ſtriking their wings together above their backs, in the manner that the pigeons called ſmiters are known to do, make a ſmart ſnap: perhaps at that time they are jealous for their young; and this noiſe and geſture are intended by way of menace.

Fern-owls have attachment to oaks, no doubt on account of food; for the next evening we ſaw one again ſeveral times among the boughs of the ſame tree; but it did not ſkim round its ſtem over the graſs, as on the evening before. In May theſe birds find the *ſcarabæus melolontha* on the oak; and the *ſcarabæus ſolſtitialis* at Midſummer. Theſe peculiar birds can only be watched and obſerved for two hours in the twenty-four; and then in a dubious twilight, an hour after ſun-ſet and an hour before ſun-riſe.

On this day, (July 14, 1789) a woman brought me two eggs of a fern-owl, or eve-jarr, which ſhe found on the verge of the hanger, to the left of the hermitage under a beechen ſhrub. This perſon, who lives juſt at the foot of the hanger, ſeems well acquainted with theſe nocturnal ſwallows, and ſays ſhe has often found their eggs near that place, and that they lay only two at a time on the bare ground. The eggs were oblong, duſky, and ſtreaked ſomewhat in the manner of the plumage of the parent bird, and were equal in ſize at each end. The dam was ſitting on the eggs when found, which contained the rudiments of young, and would have been hatched perhaps in a week. From hence we may ſee the time of their breeding, which correſponds pretty well with that of the ſwift, as does alſo the period of their arrival. Each ſpecies is uſually ſeen about the beginning of May. Each breeds but once in a ſummer; each lays only two eggs.

July 4, 1790. The woman who brought me two fern-owls eggs laſt year on July 14, on this day produced me two more, one of which had been laid this morning, as appears plainly, becauſe there was only one in the neſt the evening before. They were found, as laſt July, on the verge of the down above the hermitage under a beechen ſhrub, on the naked ground.—Laſt year thoſe eggs were full of young, and juſt ready to be hatched.

Theſe circumſtances point out the exact time when theſe curious nocturnal migratory birds lay their eggs, and hatch their young.

Fern-owls, like ſnipes, ſtone curlews, and ſome other birds, make no neſt. Birds that build on the ground do not make much of neſts.

Sand Martins.

March 23, 1788. A gentleman who was this week on a viſit at Waverley, took the opportunity of examining ſome of the holes in the ſand-banks with which that diſtrict abounds. As theſe are undoubtedly bored by bank-martins, and are the places where they avowedly breed, he was in hopes they might have ſlept there alſo, and that he might have ſurpriſed them juſt as they were awaking from their winter ſlumbers. When he had dug for ſome time, he found the holes were horizontal, and ſerpentine, as I had obſerved before; and that the neſts were depoſited at the inner end, and had been occupied by broods in former ſummers: but no torpid birds were to be found. He opened and examined about a dozen holes. Another gentleman made the ſame ſearch many years ago, with as little ſucceſs.

Theſe holes were in depth about two feet.

March 21, 1790. A ſingle bank or ſand-martin was ſeen hovering and playing round the ſand pit at Shortheath, where in the ſummer they abound.

April 9, 1793. A ſober hind aſſures us, that this day, on Wiſhanger common, between Hedleigh and Frinſham, he ſaw ſeveral bank-martins playing in and out, and hanging before ſome neſt holes in a ſand hill, where theſe birds uſually neſtle.

This incident confirms my ſuſpicions, that this ſpecies of hirundo is to be ſeen firſt of any; and gives great reaſon to ſuppoſe that they do not leave their wild haunts at all, but are ſecreted amid the cleſts and caverns of thoſe abrupt cliffs where they uſually ſpend their ſummers.

The late ſevere weather conſidered, it is not very probable that theſe birds ſhould have migrated ſo early from a tropical region, through all theſe cutting winds, and pinching froſts: but it is eaſy to ſuppoſe that they may, like bats and flies, have been awakened by the influence of the ſun, amid their ſecret latebræ, where they have ſpent the uncomfortable, foodleſs months in a torpid ſtate, and the profoundeſt of ſlumbers.

There is a large pond at Wiſh-hanger, which induces theſe ſand-martins to frequent that diſtrict. For I have ever remarked that they haunt near great waters, either rivers, or lakes.

Swallows, Congregating, and Disappearance of.

During the ſevere winds that often prevail late in the ſpring, it is not eaſy to ſay how the hirundines ſubſiſt: for they withdraw themſelves, and are hardly ever ſeen, nor do any inſects appear for their ſupport. That they can retire to reſt, and ſleep away theſe uncomfortable periods, as the bats do, is a matter rather to be ſuſpected than proved: or do they not rather ſpend their time in deep and ſheltered vales near waters, where inſects are more likely to be found? Certain it is, that hardly any individuals of this genus have at ſuch times been ſeen for ſeveral days together.

September 13, 1791. The congregating flocks of hirundines on the church and tower are very beautiful and amuſing! When they fly off all together from the roof, on any alarm, they quite ſwarm in the air. But they ſoon ſettle in heaps, and preening their feathers, and lifting up their wings to admit the ſun, ſeem highly to enjoy the warm ſituation. Thus they ſpend the heat of the day, preparing for their emigration, and as it were conſulting when and where they are to go. The flight about the church ſeems to conſiſt chiefly of houſe-martins, about 400 in number: but there are other places of rendezvous about the village frequented at the ſame time.

It is remarkable, that though moſt of them ſit on the battlements and roof, yet many hang or cling for ſome time by their claws againſt the ſurface of the walls, in a manner not practiſed by them at any other time of their remaining with us.

The ſwallows ſeem to delight more in holding their aſſemblies on trees.

November 3, 1789. Two ſwallows were ſeen this morning at Newton vicarage houſe, hovering and ſettling on the roofs and out-buildings. None have been obſerved at Selborne ſince October 11. It is very remarkable, that after the hirundines have diſappeared for ſome weeks, a few are occaſionally ſeen again. Sometimes, in the firſt week in November, and that only for one day. Do they not withdraw and ſlumber in ſome hiding place during the interval? For we cannot ſuppoſe they had migrated to warmer climes, and ſo returned again for one day. Is it not more probable that they are awakened from ſleep, and, like the bats, are come forth to collect a little food? Bats appear at all ſeaſons, through the autumn and ſpring months, when the thermometer is at 50, becauſe then phalænæ, moths, are ſtirring.

Theſe ſwallows looked like young ones.

Wagtails.

While the cows are feeding in moiſt low paſtures, broods of wagtails, white and grey, run round them, cloſe up to their noſes, and under their very bellies, availing themſelves of the flies that ſettle on their legs, and probably finding worms and larvæ that are roufed by the trampling of

their feet. Nature is ſuch an œconomiſt, that the moſt incongruous animals can avail themſelves of each other! Intereſt makes ſtrange friendſhips.

Wryneck.

These birds appear on the graſs-plots and walks; they walk a little as well as hop, and thruſt their bills into the turf, in queſt, I conclude, of ants, which are their food. While they hold their bills in the graſs, they draw out their prey with their tongues, which are ſo long as to be coiled round their heads.

Grosbeak.

Mr. B. ſhot a cock groſbeak which he had obſerved to haunt his garden for more than a fortnight. I began to accuſe this bird of making ſad havoc among the buds of the cherries, gooſeberries, and wall fruit, of all the neighbouring orchards. Upon opening its crop or craw, no buds were to be ſeen; but a maſs of kernels of the ſtones of fruits. Mr. B. obſerved that this bird frequented the ſpot where plum-trees grow; and that he had ſeen it with ſomewhat hard in its mouth, which it broke with difficulty; theſe were the ſtones of damſons. The Latin ornithologiſts call this bird *coccothrauſtes*, i. e. berry-breaker, becauſe with its large, horny beak, it cracks and breaks the ſhells of ſtone fruits for the ſake of the ſeed or kernel. Birds of this ſort are rarely ſeen in England, and only in winter.

ON THE USES OF SATIRE.

The perpetual variety of whims and follies, which preſent themſelves to the eye of an attentive obſerver, affords an argument, in contradiction to thoſe who think that the ſubjects fit for periodical writers were exhauſted in the days of the Spectator; and that his ſucceſſors have little more left than to glean here and there a few trifling remarks. But nothing is more certain than that folly is *varium mutabile ſemper*; and while, like certain animals, it takes its hue from the place where it happens to range, there will never be wanting ample food for the ſatirical, as well as the moral writer.

But it remains yet to be decided, which mode of cenſure is likely to produce the beſt effect; the ſerious, or the comic, the grave moral eſſay, or the ſatirical lucubration. Unable, or perhaps unwilling to decide this queſtion, which has been agitated, at leaſt ſince the days of Horace, writers have, in general, adopted the plan laid down in theſe lines:

'Omne tulit punctum, qui miſcuit utile dulci
Lectorem delectando, pariterque monendo.'

How much judgment is required to pen a good ſatire appears from this, that very few, except our principal writers, have ſucceeded. It is not eaſy to raiſe a laugh ſo as not to appear to join in it yourſelf, and ſo to laſh a folly as to ſeem perfectly in jeſt, or ſo to direct the judgment of your reader, that he ſhall be filled with contempt for the object of your ſatire, at the ſame time that he admires your manner. *Hic labor, hoc opus eſt.*

Satire is miſapplied if it is not confined to petty follies and vices; for it becomes itſelf ridiculous when applied to 'high crimes and miſdemeanours.' The follies of dreſs, manners, language, &c. are proper objects of ſatire; the whims of weak and ſuperſtitious people may alſo be laughed into contempt. Perhaps too the ſpirit of gambling, and the decay of matrimonial fidelity, may likewiſe be treated with a certain degree of ridiculous contempt, to ſhew that the gambler and the rake are not worthy of ſerious argument, and that to condeſcend to reaſon with them, is to part with reaſon itſelf. But no man in his ſenſes would write a ſatire to prevent mur-

der, or endeavour to laugh a thief out of his *profeſſional* habits. It would be indeed a very deſireable thing to make the court of Momus an aſſiſtant to that of *oyer* and *terminer*, and to ſubſtitute a joke for a gibbet; but, as things are, this is a hopeleſs caſe.

Serious argument, after all, will be found moſt effectual where a regular and permanent change of manners is intended. Laughter is ſo dangerous a medicine, that, unleſs in very ſkilful hands, the adminiſtration of it is always attended with danger. It is a weapon ſo eaſily turned upon him who uſes it, that he is in danger of being defeated where he thinks himſelf moſt ſecure, and of gracing the triumph which he is preparing to celebrate. Beſides, a too frequent uſe of it gives ſuſpicion that it is the only weapon he can wield; and it is well known, that ridicule in the hands of the infidel and the profligate, has done much more miſchief than any arguments were able to reſiſt. In a word, although I allow its uſe as a gentleman-like weapon, for occaſional ſparring, yet I would recommend to the writer, or the diſputant, not to truſt to it where he has much at ſtake. The victory it gains is never wholly complete, although, when defeated, no diſgrace is ſo ſeverely felt.

But although ſatire in weak hands, is a weapon moſt dangerous to him who uſes it, in the hands of an expert warrior, backed by ſtrong argument and irreſiſtible conviction, and in a good cauſe too, ſatire will be found to carry all before it; and, although I have ſaid that the petty vices and follies of the day are more properly its objects, yet, in certain circumſtances, it has been wielded with the greateſt ſucceſs, and has produced effects, perhaps ſuperior, at leaſt equal, to any train of argument, in caſes of much higher importance. Of this we have an inſtance in the moſt ſatire ever written in our, or any other language, I mean Fielding's Life of Jonathan Wild; a work that alone would have given celebrity to the name of Fielding, as a moſt brilliant wit, and a perfect judge of human nature, but which, joined with his other performances, does, in my humble opinion, place him far above all writers of the ſame claſs.

The hero of this work, it might ſeem, had little to recommend him as the ſubject of biography. He was, in few words, a fellow of low birth, manners, and education, a moſt notorious thief, and was hanged for receiving ſtolen goods. He had, perhaps, a ſuperior degree of cunning and of villany, which enabled him to defy the law for a very conſiderable time; and here is the only diſtinction between him and any other common felon of our own days. Such a man did not promiſe to furniſh any very important or intereſting matter for a biographical hiſtory, unleſs in the annals of Newgate, or in a half-penny life and death, yet, from ſuch ſcarcity of materials, joined to a moſt perfect knowledge of human life in all its ranks and degrees, Fielding has compoſed a Satirical hiſtory, matchleſs in its nature, and unrivalled in every attempt ſince. He repreſents his hero as born to be a *great man*, and he conducts him through innumerable ſcenes of deliberate villany, which he finely contraſts with the atchievements of thoſe whom the world calls *great men*. Throughout the whole he preſerves a perfectly uniform tenour of writing, in the mock heroic, or rather the mock biographical ſtyle, delivering every event with the gravity of the moſt ſerious panegyriſt, and at the ſame time with the keenneſs of the moſt ſevere ſatiriſt. The flaſhes of wit occur in every page, but ſparkle around ſo lightly that neither a firſt, nor a ſecond, nor a third reading is ſufficient to mark their force and brilliancy; and we may ſay of the whole, as has been often ſaid of Shakſpeare, that on every repetition you diſcover new beauties. To ſelect theſe would be to copy the greateſt part of the work, which it is better to recommend to an attentive

perusal. In it, beyond any book of the kind I have ever met with, entertainment and instruction are intimately blended; nor do I know where the reader can find so many reflections drawn from an attentive observation of human nature, and where the vices of the *great* are satirized with so great a force of humour, so much keenness, and yet with a delicacy of colouring which is inimitable. A satire, like this, says Fielding's Biographer, which at once strips off the spurious ornaments of hypocrisy, and shews the genuine beauty of the moral character, will be always worthy of the attention of the reader, who desires to rise wiser or better from the book he peruses; not to mention that this performance has, in many places, such seasonings of humour, that it cannot fail to be a very high entertainment to all, who have a taste for exhibitions of the absurd and ridiculous in human life.—I cannot conclude these remarks without an extract, which may serve to exemplify the rules which Fielding prescribed to himself in the execution of his plan. At the end of the work, in imitation of more serious biographers, he gives a general sketch of the character of his hero, by way of summing up the whole, and I have ever considered this as among the most masterly pieces of humour and keen satire in any language.

'We will now endeavour,' says he, 'to draw the character of this *great man*; and bringing together these several features as it were to his mind, which lie scattered up and down in this history, to present our readers with a perfect picture of greatness.

'Jonathan Wild had every qualification necessary to form a *great man*. As his most powerful and predominant passion was ambition, so nature had, with consummate propriety, adapted all his faculties to the attaining those glorious ends to which this passion directed him. He was extremely ingenious in inventing designs, artful in contriving the means to accomplish his purposes, and resolute in executing them. For as the most exquisite cunning, and most undaunted boldness qualified him for any undertaking, so he was not restrained by any of those weaknesses which disappoint the views of mean and vulgar souls, and which are comprehended in one general term of honesty, which is a corruption of *honesty*, a word derived from what the Greeks call an Ass. He was entirely free from these low vices of modesty and good-nature, which, as he said, implied a total negation of human greatness, and were the only qualities which absolutely rendered a man incapable of making a considerable figure in the world. His lust was inferior only to his ambition: but, as for what simple people called love, he knew not what it was. His avarice was immense: but it was of the rapacious, not of the tenacious kind: his rapaciousness was indeed so violent, that nothing ever contented him but the whole; for, however considerable the share was, which his coadjutors allowed him of a booty, he was restless in inventing means to make himself master of the smallest pittance reserved by them. He said, laws were made for the use of *prigs* (thieves) only, and to secure their property: they were therefore never more perverted, than when their edge was turned against these; but that this generally happened through their want of sufficient dexterity. The character which he valued himself most upon, and which he principally honoured in others, was that of hypocrisy. His opinion was, that no one could carry *priggism* very far without it; for which reason, he said that there was little greatness to be expected in a man who acknowledged his vices, but always much to be hoped from him, who professed great virtues; wherefore, though he would always shun the person whom he discovered guilty of a good action, yet he was never deterred by a good character, which was more commonly the effect of profession than of action: for which reason, he himself was al-

ways very liberal of honeſt profeſſions, and had as much virtue and goodneſs in his mouth as a ſaint; never in the leaſt ſcrupling to ſwear by his honour, even to thoſe who knew him the beſt; nay though he held good-nature and modeſty in the higheſt contempt, he conſtantly practiſed the affectation of both, and recommended this to others, whoſe welfare, on his own account, he wiſhed well to.

'Nor had he any of thoſe flaws in his character, which, though they have been commended by weak writers, have (as I hinted in the beginning of this hiſtory) by the judicious reader been cenſured and deſpiſed. Such was the clemency of Alexander and Cæſar, which nature has as groſsly erred in giving them, as a painter would, who ſhould dreſs a peaſant in robes of ſtate, or give the noſe, or any other feature of a Venus, to a ſatyr. What had the deſtroyers of mankind, that glorious pair, one of whom came into the world to uſurp the dominion, and aboliſh the conſtitution of his own country: the other to conquer, enſlave, and rule over the whole world, at leaſt as much as was well known to him, and the ſhortneſs of his life would give him leave to viſit; what had, I ſay, ſuch as the as theſe to do with clemency? Who cannot ſee the abſurdity and contradiction of mixing ſuch an ingredient with theſe noble and great qualities I have before mentioned? Now in Wild, every thing was truly great almoſt without alloy, as his imperfections (for ſurely ſome ſmall ones he had) were only ſuch as ſerved to denominate him a human creature, of which kind none ever arrive at conſummate excellence: but ſurely his whole behaviour to his friend Heartfree is a convincing proof, that the true iron or ſteel greatneſs of his heart, was not debaſed by any ſofter metal. Indeed, while greatneſs conſiſts in power, pride, inſolence, and doing miſchief to mankind: to ſpeak out—while a great man and a great rogue are ſynonymous terms, ſo long ſhall Wild ſtand unrivalled on the pinnacle of *greatneſs*. Nor muſt we omit here, as the finiſhing of his character, what indeed ought to be remembered on his tomb or his ſtatue, the conformity above-mentioned of his death to his life: and that Jonathan Wild the Great, after all his mighty exploits, was, what ſo few *great* men can accompliſh—hanged by the neck till he was dead.'

A. L.

An AFFECTING ANECDOTE.

ON one of the many bridges in Ghent, ſtand two large brazen images of a father and ſon, who obtained this diſtinguiſhed mark of the admiration of their fellow-citizens by the following incidents:

Both the father and the ſon were, for ſome offence againſt the ſtate, condemned to die. Some favourable circumſtances appearing on the ſide of the ſon, he was granted a remiſſion of his ſhare of the ſentence, upon certain proviſions—in ſhort, he was offered a pardon, on the moſt cruel and barbarous condition, that ever entered into the mind of even monkiſh barbarity; namely, that he would become the executioner of his father! He at firſt reſolutely refuſed to preſerve his life, by means ſo fatal and deteſtable: this is not to be wondered at; for I hope, for the honour of our nature, that there are but few, very few ſons, who would not have ſpurned, with abhorrence, life ſuſtained on conditions ſo horrid, ſo unnatural. The ſon, though long inflexible, was at length overcome by the tears and entreaties of a fond father, who repreſented to him, that, at all events, his (the father's) life was forfeited, and that it would be the greateſt poſſible conſolation to him, at his laſt moments, to think, that in his death he was the inſtrument of his ſon's preſervation. The youth conſented to

Penshurst Place, Kent.

adopt the horrible means of recovering his life and liberty: he lifted the axe; but, as it was about to fall, his arm ſunk nerveleſs, and the axe dropped from his hand! Had he as many lives as hairs, he would have yielded them all, one after the other, rather than again even conceive, much leſs perpetrate, ſuch an act. Life, liberty, every thing, vaniſhed before the dearer intereſts of filial affection: he fell upon his father's neck, and, embracing him, triumphantly exclaimed, 'My father, my father! we will die together!' And then called for another executioner to fulfil the ſentence of the law.

'Hard muſt be their hearts indeed, bereft of every ſentiment of virtue, every ſenſation of humanity, who could ſtand inſenſible ſpectators of ſuch a ſcene. A ſudden peal of involuntary applauſes, mixed with groans and ſighs, rent the air. The execution was ſuſpended; and on a ſimple repreſentation of the tranſaction, both were pardoned: high rewards and honours were conferred on the ſon; and, finally, thoſe two admirable brazen images were raiſed, to commemorate a tranſaction ſo honourable to human nature, and tranſmit it for the inſtruction and emulation of poſterity. The ſtatue repreſents the ſon in the very act of letting fall the axe.'

An Account of PENSHURST PLACE, *in* Kent, *the Seat of the late Mrs.* Perry: *With a Perſpective View of that venerable Manſion.*

PENSHURST PLACE is not only an intereſting object, on account of the celebrity of one of its former poſſeſſors, the gallant ſir Philip Sydney, but it has, in itſelf, as a ſpacious and venerable remain of antiquity, a high claim to attention. The ſize of the annexed plate would not admit of an illuſtration of all the parts of this noble and extenſive building; but Mr. Ireland (from whoſe 'Picturesque Views of the River Medway,' we have copied it) has attempted to give ſome idea of the ſcenery, by obtaining the beſt point of view for comprifing the whole; in which is included the church of Penſhurſt, with its venerable tower, and Gothic ſpires, breaking through the intervening thicket of trees.

The neighbouring village of Penſhurſt, or, as it is ſometimes written, in ancient records, Penceſtre, derives its name from the old Britiſh word Pen, the ſummit, or top of any place, and Hyrſt, a wood. It is ſix miles from Tunbridge Wells, four from Sevenoaks, and thirty-one from London.

From the name of this place Waller, with all the gallantry of poetical fiction, took occaſion to aſcribe to his Sachariſſa, lady Dorothy Sydney, who reſided here, the power of changing the wildneſs and luxuriance of the natural beauties of nature, into the regularity of a garden.

'Her preſence had ſuch more than human grace
That it could civilize the rudeſt place,
And beauty too, and order could impart,
When Nature ne'er intended it, nor Art.'

Penſhurſt Place, in the time of Edward I, was in the poſſeſſion of ſir Stephen De Peneſhurſte, who was was made Conſtable of Dover Caſtle, and Warden of the Cinque Ports, by Henry III; after which it was conveyed to John De Pulteney, who, in the reign of Edward II, had licenſe to embattle his manſion-houſe of Penſhurſt; and, in the reign of Edward III, he was ſo highly favoured, as to receive the honour of knighthood. In the ſame reign, he was four times elected lord-mayor of London. From this family it came by marriage to ſir John Devereux, who, in the reign of Richard II, had alſo a licence to embattle and fortify this manſion. After paſſing through ſeveral hands, it was at length forfeited to the crown, by

the attainder of ſir Ralph Vane, in the fourth year of Edward VI, by whom, in 1553, it was given to ſir William Sydney, who enjoyed it but a few months. From him it devolved to his infant ſon, ſir Henry, who, from his childhood, was bred at court, and was the playmate and bedfellow of prince Edward. He was afterward made gentleman of the privy chamber; and the young prince is ſaid to have taken ſo much delight in his company, as to have rarely permitted his abſence. He ſoon after expired in his arms, at Greenwich; at which period ſir Henry retired to Penſhurſt, there to indulge his grief; and by thus withdrawing himſelf, he eſcaped the fury of the times, and moſt probably the fatal conſequences that attended his father-in-law, the duke of Northumberland, in the ſucceeding reign of the bigoted Mary. This fact is adverted to in the inſcription over the gateway, at the grand entrance.

This ancient manſion has been formerly a place of conſiderable ſtrength, as appears from its immenſe walls and high embattled towers. The principal entrance to the great quadrangle, which is of hewn ſtone, is nearly in its original Gothic ſtate, and impreſſes the mind very forcibly with the gloomy pomp of our anceſtors. The hall is ſpacious and lofty, and the fragments of ancient armour, here exhibited, ſtrongly recall to memory,

'The ancient errant knights,
Who won their ladies' hearts in fights,
And cut whole giants into fritters,
To put them into amorous twitters.'

The apartments of this famous manſion have been much modernized, within a few years, by the late proprietor, William Perry, eſq. who became poſſeſſed of this eſtate by marriage with miſs Elizabeth Sydney, niece to the late earl of Leiceſter. Mrs. Perry left it in the hands of truſtees for her grandſon Mr. Shelley.

Among other pictures in this manſion, two particularly merit attention: the one of ſir Philip, the other of his ſiſter, the counteſs of Pembroke. A family reſemblance may eaſily be diſcovered. The countenance of the latter highly juſtifies the poet's warmeſt eulogium; and in the features of the former may be traced the elegant and placid mind of the accompliſhed gentleman.

In contemplating this venerable and extenſive pile, the mind naturally reverts to that period in which it received its greateſt ornament, by giving birth to ſir Philip Sydney, in 1554. Ben Johnſon poetically obſerves, that, on this occaſion, 'All the Muſes met;' and other writers aſſert, that in him was born the 'darling of his time, and of his country.' Indeed, all Europe, with one conſent, pronounced him the moſt complete gentleman of his time. He obtained various poſts of honour from his ſovereign; and he was even deemed worthy to be put in nomination for the crown of Poland; an honour, which probably might have been conferred upon him, had not queen Eliſabeth refuſed to further his promotion, leſt, as ſhe expreſſed herſelf, ſhe ſhould 'loſe the jewel of her time.'

Theſe extraordinary diſtinctions at home and abroad, the correctneſs of his morals, and the heroiſm and humanity which he diſplayed in the cloſing act of his life, place him as a ſcholar, a ſtateſman, a ſoldier, and a man, in as elevated a point of view as human nature has ever been known to attain.

At the birth of ſir Philip, an oak was planted in the park, on the ſpot now called Beais Oak. This oak is celebrated by Waller in the following lines:

'Go, boy, and carve this paſſion on the bark
Of yonder tree, which ſtands the ſacred mark
Of noble Sydney's birth; when ſuch benign,
Such more than mortal-making ſtars did ſhine;
That there they cannot but for ever prove
The monument and pledge of humble love.'

Whether the tree now ſhown be the identical one here alluded to, cannot now be aſcertained, but, from its venerable appearance, it may be poſſible. It meaſures twenty-two feet in circumference; and within the hollow of its ſpacious trunk is a ſeat capable of receiving ſeveral perſons. This noble tree ſtands near a fine piece of water, called Landcup Well.

This park and neighbourhood is celebrated for the large growth of its trees, one of which was cut down about ten years ago, and produced 840 feet of timber, weighing twenty-one tons.

Near Well Place, in the park, is a fine ſpring called Kidder's Well, which has been found, on analizing it, to be a ſtronger chalybeate than the wells of Tunbridge. The ſpring riſes into a ſtone baſin, which was erected by an earl of Leiceſter, many years ago. In the neighbourhood of Penſhurſt are many other ſprings, likewiſe found to partake more or leſs of the chalybeate quality; it is worthy of remark, that the vicinity is famed for its veins of iron.

In a deep hole in the river Medway, called Tapner's Hole, near the lower end of this park, a ſtrong ebullition appears on the ſurface of the water, from a ſpring which riſes beneath. The park conſiſts of 420 acres, but has not ſuch advantages of proſpect or ſituation as are to be found in other parts of this county. Under this impreſſion, and from the decayed and neglected ſtate of the building, we may contemplate with regret the probability of a total decay of this manſion of Heroes. Should that event take place, and no ſtone remain to indicate its former greatneſs, yet ſhall imagination fondly trace the ſpot where Sydney firſt drew breath; that Sydney, whoſe name can never be forgotten while elegance of manners, and true greatneſs of mind, are thought to dignify human nature.

I cannot quit Penſhurſt without mentioning an additional honour it has received in giving birth to the renowned Algernon Sydney, whoſe integrity in the cauſe of patriotiſm, and deep ſkill in the ſcience of government, muſt ever render him dear to the lover of his country. In an academical prize poem, ample juſtice has been done to his merits by the elegant pen of a dignitary of the church:

Unconquer'd patriot! form'd by ancient lore,
The love of ancient freedom to reſtore;
Who nobly acted what he boldly thought,
And ſeal'd by death the leſſon that he taught!

The CONNEXION *between the* GENIUS *of* ARTISTS *and their* LIVES.

[An Extract from a Letter.]

YOU tell me that, upon recollection, you know of no living artiſt whoſe life does not greatly correſpond to his performances, and that you have read of very few of the dead, whoſe works do not ſhadow forth, by this analogy, the general caſt of their moral conduct. Homer, we are told by the very ingenious and learned author of his life, had perſonally accompanied his fancy whereever ſhe roved upon the face of the earth; and I make no doubt ſuch was the reſtleſs activity of his ſoul, that he ardently wiſhed to ſpurn this dull globe, and ſoar to the ſeats of his immortals. To contraſt his character, we need only caſt our eyes on his poetical diſciple Virgil, whoſe modeſt majeſty in private life bore ſo great a reſemblance to all his compoſitions. But M. De Pilea, the ingenious author of the Lives of the Painters, will furniſh us with ſome remarkable examples to this purpoſe. I dare ſay you have often obſerved, that ſeveral pieces of Michael Angelo's, which you have ſeen in Italy, though finiſh-

ed in a *grand goût*, and with a vaſt extent of genius, want that purity, ſoftneſs, and elegance, which afford ſo much pleaſure in the works of ſeveral, much inferior painters. There is a fierceneſs in the looks, and a wildneſs in the attitudes of all his figures, which, though they are indeed correct, and agreeable to nature in ſome moods, and cannot be condemned by the judgment, are by no means agreeable to the eye, and though they fully ſatisfy the underſtanding, never captivate the heart.

You might obſerve, at the ſame time, on the contrary, that Raphael's, for want of the uſe of the *Chiaro Oſcuro*, had not that prominency, nor ſeemed to come out from the canvaſs ſo boldly as thoſe of his rival; that he was rather deficient in colouring, and preſerved too great a ſameneſs in the drapery of all his figures; yet, nevertheleſs, blending the elegance of the antique and the ſimplicity of nature together, and ſpreading that undefineable grace, which was ſo bounteouſly beſtowed upon him, over every piece, he ſeizes at once upon the warm applauſe of the heart by an irreſiſtible force; and the judgment fearfully ſuſpends the exerciſe of her faculties over the ſeeming deficiencies at a diſtance, as if each ſtroke was the immediate inſpiration of heaven, and there was nothing left for the human mind to do, but to wonder and adore.

Now if we look into the lives of theſe two eminent painters, we ſhall obſerve in them a correſpondent ſimilarity to the different defects and excellencies in their reſpective performances. The firſt, Michael Angelo, lived in the moſt recluſe manner, was ſtrict even to the greateſt ſeverity in his morals, and gave himſelf entirely up to the cultivation of the arts he profeſſed. Notwithſtanding, all his actions were blameleſs, nay rather commendable, when examined only by the rules of moral rectitude; yet wanting that eaſe and gentle deportment, which an habitual intercourſe with mankind imperceptibly gives, he was ſo diſpleaſing in converſation that he was avoided at laſt by every acquaintance, and, while Raphael's houſe was crowded with friends and diſciples, the world willingly left him to the enjoyment of his beloved ſolitude. Raphael, on the contrary, was a man of the world, violently addicted by his conſtitution to pleaſure, but more particularly to the company of women, which courſe of life ſhortened his days. He died in the thirty-ſeventh year of his age, to the unſpeakable grief of all who knew the man, or admired the artiſt. Notwithſtanding theſe human infirmities, he poſſeſſed ſuch a natural and acquired ſweetneſs of temper, and complacency in behaviour, ſo analogous to that undefineable grace in his painting, that he was univerſally beloved by all who knew him, and the ſevereſt moraliſt was charmed with his converſation, though he condemned his conduct.

The dark gloomy colouring we find in the pieces of the Baſſans, aroſe from the horror of their diſtempered imaginations;

——'That ſurly ſpirit, Melancholy,
Had baked their blood, and made it heavy thick.'

SHAKS. King John.

Therefore they made choice of ſuch objects to paint, as were reſponſive to the internal ſhade in their minds, particularly night-pieces, where their ſouls poured forth their unconſtrained diſpoſitions upon the canvaſs, and indulged in beloved darkneſs. Whenever they were, againſt their choice, employed upon other ſubjects, the ſtrong ſhades lowered upon every landſcape, and even the cheerful light of the ſun itſelf was greatly obſcured by geniuſes, which naturally delighted in his abſence.

A Picturesque Description of the River RHINE, *from its Sources in Switzerland to its Entrance, under different Names, into the Sea: With Historical Anecdotes and Reflections. Concluded from Page* 345.

THE CONTENTS.

Ehrenfels.—Bingerloch.—Sublime Scenery.—Bacharach.—Military Anecdote.—Kaub.—Fort of Pfalz.—Oberwesel.—Echo at Luhrley.—St. Goar, Rheinfels, and Gourhausen.—Boppart.—Religious Houses.—Rhens.—The Konings Stuhl.—Oberlahnstein.—Causes of the individual Weakness of the German Princes.—Disjunction of Territory.—The Lahn.—Picturesque Situation of Coblentz.—Ehrenbreitstein.—Beudorf.—Neuwied.—Wise and benevolent Policy of the Princes of Wied.—Beautiful Picture of Religious Harmony.—Anecdote.—Andernach.—Bonn.—Cologne.—Mulheim.—Dusseldorf.—Duisburg.—Wesel.—Emmerick.—Separations of the Rhine.—Its Misfortunes, Disgrace, and Exit.

FROM Bingen, we shall now proceed down the Rhine, with another warm admirer of that noble river, a female writer, of whose admirable talents the public have already had such specimens, that her name alone is sufficient to excite very high expectations—We mean Mrs. Radcliffe, who has just published 'A Journey, made in the Summer of 1794, through Holland and the Western Frontier of Germany, with a Return down the Rhine *.

We have already mentioned, at Bingen, the Maus Thurm, or Tower of Mice. Opposite this appear the ruins of the castle of Ehrenfels, situate on a cliff highly elevated above the surface of the water; broken, craggy, and impending; but with vines crawling in narrow crevices, and other rocks still aspiring above it. *Ehrenfels* signifies Majestic, or Noble Rock; and *Fels*, which is the present term for *rock* in all the northern counties of England, as well as in Germany, is among several instances of exact similarity between the English and German languages. Adjacent to the ruins of this castle is an elegant modern tower, erected by count Ostein, in order to enjoy the enchanting view of the river. The mountain is so steep, that the only way to carry up manure is on the shoulders of the labourers; and yet its vines are esteemed among the choicest in the district of Rudesheim.

At Bingerloch, the Rhine expands into a kind of lake. Below this is one of the most dangerous parts of this river, which being at once impelled by the waters of the Nahe, compressed by the projection of its boundaries, and irritated by hidden rocks in its current, makes an abrupt descent, frequently rendered more dangerous by whirlpools, and exhibiting scenes of the true sublime, of which our Thomson had no inadequate idea:

> The rous'd up river pours along:
> Resistless, roaring, dreadful, down it comes
> From the rude mountain, and the mossy wild,
> Tumbling through rocks abrupt, and sounding far;
> ——— ——— again constrain'd
> Between two meeting hills, it bursts away,
> Where rocks and woods o'erhang the turbid stream:
> There gathering triple force, rapid, and deep,
> It boils, and wheels, and foams, and thunders through.

* To which are added Observations during a Tour to the Lakes of Lancashire, Westmorland, and Cumberland.

In the paſſage from Bingen to Bacharach, which is about twelve miles diſtant, there is, indeed, a great variety of objects to amuſe the eye: ſavage wildneſs, blended with high cultivation; extenſive proſpects immediately ſucceeded by perpendicular cliffs, that ſcarcely admit the day; and a multitude of caſtles, mouldering into ruins, on the ſummit of the mountains, unite to render the ſcene both amuſing and awful.

Bacharach is a town of great antiquity; is ſeated in the Palatinate, on the left ſide of the Rhine; has a conſiderable commerce in Reniſh wines; and is much indebted for its proſperity to the elector palatine, who has given the ſame privileges to the Calviniſts and Lutherans as to the Roman catholics. It is in the liſt of places ruined by Lewis XIV, in 1689. The whole town was then ſo carefully and methodically plundered, that the French commander, during the laſt night of his ſtay, had nothing to ſleep on but ſtraw; and, the next day, this bedding was employed in aſſiſting to ſet fire to the town, which was ſoon reduced to aſhes.

From Bacharach, the Rhine takes a northerly direction; and, about a mile below that town, is the borough of Kaub, a place, ſtrong both by art and nature. Oppoſite this town, in the middle of the river, is the celebrated fort called the Pfalz, that is, *the Palatinate*. It is not only intended to enforce the collecting of the tolls due to Kaub, but it ſerves occaſionally as the melancholy abode of ſtate priſoners.

Beyond Bacharach, on the ſame ſide of the river, is Oberweſel, once an imperial town, but now in the electorate of Treves. It is ſeated cloſe by the river, in a valley, between a high and craggy rock, on the ſouthern ſide, and lofty, but more expanded hills on the northern. On the top of the craggy rock is the famous caſtle of Schönberg, which, in Engliſh, ſignifies *fine hill*. Oberweſel is more diſtinguiſhed for its religion than any of the neighbouring cities; that is, for a ſuperfluous number of churches and convents, ſteeples, bells, and altars.

Between Oberweſel and St. Goar, the Rhine is of extraordinary breadth, and the majeſtic mountains are covered with foreſts, which leave ſpace for little more than a road between their feet and the water. From ſome of theſe mountains deſcend rivulets, which, in very wet ſeaſons, roar with angry torrents.

At Luhrley, oppoſite Oberweſel, where the Rhine forms a kind of bay, is a rock celebrated for its echo, repeating words ſeveral times diſtinctly. Hence the voyager has a perſpective view of the town of St. Goar, the ſtrong fortreſs of Rheinfels on the rocks beyond, and of the ſmall fortified town of Goarhauſen on the oppoſite bank. St. Goar is in the dominions of the landgrave of Heſſe Caſſel. It lies at the feet of rocks on the weſtern ſhore; its ramparts and fortifications ſpreading far along the water, and mounting in ſeveral lines among the ſurrounding cliffs, ſo as to have a very ſtriking and romantic appearance. 'The Rhine, perhaps,' ſays Mrs. Radcliffe, 'preſents no where grander objects, either of nature or of art, than in the northern perſpective from St. Goar. There, expanding with a bold ſweep, the river exhibits, at one view, on its mountainous ſhores, ſix fortreſſes or towns, ſome of them placed in the moſt wild and tremendous ſituations; their ancient and gloomy ſtructures giving ideas of the ſullen tyranny of former times. The height and fantaſtic ſhape of the rocks upon which they ſtand, or by which they are overhung, and the width and rapidity of the river, which, unchanged by the viciſſitudes of ages, and the contentions on its ſhores, has rolled at their feet, while generations that made its mountains roar, have paſſed away into the ſilence of eternity—theſe were objects, which, combined, formed one of the ſublimeſt ſcenes we had viewed.'

Rheinfels is an enormous rock, impending over St. Goar, and receives its name, which ſignifies the Rock of the Rhine, by way of eminence, as it is the boldeſt and moſt detached of any on the river; and the ſtupendous and majeſtic fortreſs on its ſummit ſeems to be paramount, as it were, over all the fortreſſes in this port. It effectually reſiſted many a vigorous aſſault prior to the preſent century; but, in 1758, the French marquis de Caſtries ſurpriſed it without the loſs of a man. It was reſtored to the landgrave in 1763; but, in 1794, it made ſo ſlight a reſiſtance againſt the French, who, at the ſame time, became maſters of St. Goar, that the governor was tried by a court martial, and ſentenced to death. A flying bridge maintains a communication between St. Goar and Gourhauſen.

Further northward is the diſmal old town of Boppart, once an imperial city, ſtill ſurrounded with venerable walls, and dignified by the fine Benedictine nunnery and abbey of Marienberg, perched upon a mountain above. Boppart, like many other towns, is built on the margin of the Rhine, whence it ſpreads up the rocks, that almoſt impend over the water, on which the cluſtered houſes are ſcarcely diſtinguiſhable from the cliffs themſelves. Here is likewiſe a convent of Carmelites, and another of Franciſcans; and the ſpot is ſuch as well ſuited the ſuperſtition of former times.

—— O'er the twilight groves, and duſky caves,
Long-ſounding aiſles, and intermingled graves,
Black Melancholy ſits, and round her throws
A death-like ſilence, and a dread repoſe.
Her gloomy preſence ſaddens all the ſcene,
Shades every flower, and darkens every green;
Deepens the murmur of the falling floods,
And breathes a browner horror o'er the woods.

POPE.

Half way between Boppart and Coblentz is the town of Rhens, remarkable for its vicinity to a low octagonal turret, on a ſmall eminence, ſurrounded by venerable walnut trees. This is the famous Konings Stuhl, literally *King's Seat*, where the electors uſed to aſſemble, in the fourteenth century, to chooſe an emperor, and deliberate on affairs of ſtate. Nearly oppoſite Rhens, is the ſmall town of Oberlahnſtein, which belongs to the elector of Mentz, though ſeparated from his other dominions by thoſe of ſeveral princes. To ſuch interſections of one territory with another the individual weakneſs of the German princes is partly owing; while their collected body has not only neceſſarily the infirmities of each of its members, but is enfeebled by the counteraction ariſing from an arrangement, which brings perſons together to decide a queſtion, according to a common intereſt, who are always likely to have an individual one of more importance to each than his ſhare in the general concern.

The banks of the Rhine afford many inſtances of this disjunction of territory. The elector of Cologne has a town nearly to the ſouthward of all the dominions of Treves. The elector palatine, whoſe poſſeſſions on the eaſt bank of the Rhine are interſected by thoſe of five or ſix other princes, croſſes the river to occupy ſome towns between the electorates of Mentz and Treves *. The landgrave of Heſſe Caſſel does the ſame to his fortreſs of Rheinfels; and the elector of Mentz, in return, has a ſtrip of land, and his chief country reſidence, between the dominions of two of the houſes of Heſſe.

Between Oberlahnſtein and Niederlahnſtein (that is, Upper and Lower Lahnſtein) is the mouth of the Lahn, a ſmall river, which deſcends from the mountains of Wetteravia on the right, and waſhes ſilver and lead mines in its courſe. Near the weſtern ſhore is

* He has a territory more diſtant ſtill, the marquiſate of Bergen-op-Zoom, in Dutch Brabant.

the iſland of Oberworth, on which is a Benedictine convent; and beyond this ariſe the city of Coblentz and the oppoſite mountain and fortreſs of Ehrenbreitſtein.

Not to be too minute in our deſcriptions of places, that do not form the *natural* ſcenery of the Rhine, we ſhall be content to obſerve, with reſpect to Coblentz, that it preſents its beſt front, not from the river, but as the traveller approaches from the ſide of Andernach. The pleaſant villa of Schonbornſluſt, belonging to the elector Treves, and contiguous to the city; the majeſtic caſtle of Ehrenbreitſtein, built upon a ſtupendous rock; the ancient palace, with its dependent hamlet, called the vale of Ehrenbreitſtein, at the foot of theſe hills, and placed under their guardianſhip; the ſurrounding monaſteries that ſeem to mitigate the ideas of horrid war, excited by caſtles and forts, by ſuggeſting thoſe of devout retirement; the union of the Moſelle with the Rhine; the flying bridge over the latter, and the bridge of ſtone over the former; the diſtant view of lofty hills, that encircle the town in the ſouthern direction, and by loſing themſelves with the winding of the river toward the ſoutheaſt, leave the imagination to follow them—all conſpire to render the ſituation of Coblentz peculiarly picturesque.—This city was particularly celebrated as the principal aſylum of the French emigrant princes and nobleſſe, before the commencement of the preſent war. It was taken by the French, with many other places on the Rhine, in 1794.

The vaſt mountain, on which ſtands the caſtle of Ehrenbreitſtein, is aſcended by a narrow, ſteep, and winding path. The caſtle, which is very ancient, is not leſs, it is ſaid, than 800 feet in perpendicular height from the river. It had acquired the character of impregnability from the reſiſtance it made in the time of the Swediſh wars. It has a communication with Coblentz, by ſubterraneous and *ſiebaqueous* paſſages, cut out of the ſolid rock; and it is ſupplied with water, from a well 280 feet in depth. But with all its natural and artificial advantages, this fortreſs followed the example of Coblentz, by an immediate ſurrender to the French, in October 1794.

About halfway between Coblentz and Neuwied, on the eaſt ſide of the river, is the town of Beudorf. 'This town,' ſays Dr. Cogan, 'requires ſome attention, on account of an iron foundery, which employs a multitude of hands; and that it is in a flouriſhing ſtate, is apparent from the number of neat and comfortable dwellings, placed among ſome that riſe to reſpectability, and are adorned with gardens. Roman catholics, Lutherans, and Calviniſts, unite harmoniouſly in the different occupations of the foundry, without the leaſt quarrel concerning differences in religion. Not a ſingle ſtroke of the hammer is aimed at popery; nor do any of the furnaces glow for the converſion of heretics.'

But a ſtill more intereſting place, about five miles further, on the ſame ſide of the Rhine, is Neuwied. It is a modern city, as its name imports, being the capital of the principality of *Wied*, and new *(Neu)* compared with every other adjacent to the Rhine. It is not ſurrounded by walls; which is a very unuſual circumſtance in a country, where every place above the title of a village, has its fortification. The ſtreets are broad and ſtraight, interſecting each other at right angles. The houſes are neat, but none of them ſplendid, excepting the palace of the prince. The anceſtors of the preſent prince were formerly among the richeſt of Germany; but a large ſhare of property, and much political influence, have been loſt, in conſequence of their embracing the proteſtant faith. Their poſſeſſions are now reduced to two boroughs, excluſive of this city, and forty or fifty villages.

It is chiefly to the ſacrifice made to a good conſcience, that the flouriſhing ſtate of this city may juſtly be aſcribed.

Alexander, the firſt of the proteſtant line, found it neceſſary to improve his diminiſhed fortunes; and he had the wiſdom to connect the happineſs of his people with his own pecuniary intereſt. He gave every encouragement in his power to every object of induſtry; invited foreigners to ſettle under his juriſdiction, by making very advantageous propoſals; and, inſtead of ſuffering his mind to be embittered by the ill treatment he had experienced, he freely tolerated that religion which had perſecuted him. His ſucceſſors, following this excellent example, have rendered this city a flouriſhing colony of artiſts. The inhabitants amount to between ſix and ſeven thouſand: it has been conſiderably on the increaſe ſince 1762, and now contains a number of artificers and manufacturers in almoſt every branch. It poſſeſſes alſo a printing-office, which, from the freedom granted to the preſs, is riſing into conſiderable repute.

'The preſent prince of Neuwied,' ſay Dr. Cogan, 'in imitation of his anceſtors, is the friend and father of his people. Every plan is adopted to render them induſtrious and happy. Not only is every ſpecies of manufacture encouraged, but every religious ſect enjoys full toleration. Jews, Hernhutters, or Moravians, Catholics, Lutherans, and Calviniſts, are permitted to worſhip the one Univerſal Father, each in his own manner, and are thus habituated to conſider themſelves as brethren. Being children of the ſame parent, ſubjects of the ſame moral government, candidates alike for a future ſtate, they are taught to reflect, that the articles in which they agree, are of infinitely greater importance than thoſe in which they differ; and that the minutiæ of ſpeculative opinions cannot annihilate the primary duty of brotherly love. The Calviniſt is the eſtabliſhed religion; but, as far as we could learn, it had no other external privilege than that of tolling the bell to church; and the different ſectaries, inſtead of being diſconcerted at the ſound, regulate the hours of their worſhip alſo by its ſummons.'

'Several inſtances,' continues Dr. Cogan, 'were given us of the beneficence of this prince, and his paternal attention to the welfare of his ſubjects; but I ſhall only mention the following: as he was taking a walk with his family, he ſtopped at the workſhop of a ſmith, who was ſtanding inactive before his door. 'Whence comes it,' ſays the prince, 'that I have not heard the ſound of your hammer of late?'—'Alas! ſir, I have no iron, and a loſs I ſuſtained the laſt week has deprived me of the means to procure ſome.'—'How much can you work up in a week?'—'To the value of about ten crowns.'—'Well!' anſwered the prince, 'I ſhall inquire whether this be a fact, or whether you tell me a falſehood to excuſe your indolence.'—The prince, upon inquiry, was convinced of the truth of the ſmith's aſſertion, and he ſent him the ten crowns the day following. The ſmith purchaſed the requiſite materials: joy and gratitude gave ſuch unuſual ſtrength to his arm, that the ſtrokes of his hammer were heard much further than uſual.'

Of Andernach, further down, on the oppoſite ſhore, with its prodigious floats of timber, and the remainder of the Rhine to Bonn, we have already given Dr. Cogan's deſcription *.

From Neuwied to Bonn the Rhine keeps a northweſterly courſe. Bonn is principally diſtinguiſhed as the favourite reſidence of the elector of Cologne, and by a celebrated univerſity. It contains about 12,000 inhabitants. The gardens of the electoral palace are magnificent, and are open to the public.

After leaving Bonn, the ſhores have little that is intereſting, unleſs in the retroſpect of the Seven Mountains, with rich woodlands undulating at

* See the entire chapter, with a perſpective view of the Sebenbergen, or Seven Mountains, in our Magazine for July 1794.

their feet; and when theſe, at length, diſappear, the Rhine loſes, for the reſt of its courſe, the wild and ſublime character, which diſtinguiſhes it between Bingen and Bonn. The rich plain which it waters between the latter place and Cologne, is ſtudded at every gentle aſcent that bounds it, with abbies and convents, moſt of them appropriated to the maintenance of noble chapters. Beſide theſe, the Rhine paſſes no leſs than twenty villages in its courſe from Bonn to Cologne, a diſtance, by water, of about five-and-twenty miles.

Cologne, one of the moſt ancient, and, formerly, one of the moſt commercial cities in Europe, appears, when viewed from the river, with more of ancient majeſty than from any other point. Its quays, extending far along the bank; its lofty ramparts ſhaded with old cheſtnuts, and crowned by many maſſy towers, black with age; the old gateways opening to the Rhine; and the crowd of ſteeples, overtopping all, give it a venerable and picturesque character. For a deſcription of this city we refer to Dr. Cogan's work, and particularly to his 27th and 29th letters, in the firſt of which he proves, from the character of the inhabitants of Cologne, that religious pomp and ſplendour have no beneficial influence upon morals, and that eccleſiaſtical government is of all others the moſt pernicious: in the laſt, he minutely inveſtigates the cauſes of the decay of this once flouriſhing city.

Three miles below Cologne, on the oppoſite bank, is Mulheim, a ſmall town in the palatinate, where the few proteſtants of Cologne have a church, to which they are obliged to repair for public worſhip, not being permitted to have one in the city.

The banks of the Rhine are now leſs enlivened by villages than in the diſtricts from Mentz to Cologne. Corn lands, with a ſlight intermixture of wood, border the river hence to Duſſeldorf; and the ſtream, which is now wider and leſs rapid, flows, with an even force, through long reaches, ſcarcely diſtinguiſhed from each other by any variety of country, or intervention of towns.

Duſſeldorf, the principal town of the duchy of Berg, is ſubject to the elector palatine. It is ſeated on the Rhine and on the ſmall river Duſſel, from which laſt it modeſtly takes its name, which ſignifies the Village on the Duſſel *. From a village, it is become a lively populous city; contains 18,000 inhabitants, including the garriſon; and is celebrated for its gallery of paintings, one of the largeſt and beſt ſelected collections in Europe. Theſe pictures having been removed, with thoſe of Manheim, to Munich in Bavaria, fortunately eſcaped falling into the hands of the French, on the ſurrender of this place.

From Duſſeldorf, the Rhine proceeds by the iſland and town of Kayſerwerth; Duiſburg, ſeated alſo on the Roer, and in the vicinity of foreſts ſtill celebrated for herds of wild horſes; Rheinberg; Weſel, a town, with a citadel, which is a ſtate priſon belonging to the king of Pruſſia †; Burick, Xanten, Rees; and Emmerick, a conſiderable town in the duchy of Cleves, eight miles eaſt of the capital of that name.

Below Emmerick, the 'majeſtic Rhine,' firſt enters the rich 'Batavian meads,' but merely to encounter misfortune and diſgrace. We firſt meet with the Betuwe, (the ancient Batavia) an oblong iſland, formed by the diviſion of the Rhine into two ſtreams. That which bends to the weſt, takes the name of the Wahal,

* It is doubtleſs from the Saxon word *Dhorpf*, that ſo many villages in England take the name of *Thorp*; that is, the *village*.

† Here Rapin, driven from the diſtrict, now called La Vendee, in France, by the perſecution of Lewis XIV, retired to write his Hiſtory of England; recollecting, perhaps, that it had before ſheltered refugees from the tyranny of the duke of Alva, and our ſanguinary Mary.

and paſſing by Nimeguen, joins the Maeſe near Bommel, and, at Worcum, loſes its uſurped diſtinction in the name of this laſt river. The Maeſe, below Worcum, expands into a great lake, called the Bies Boſch, on the weſt ſide of which is the iſland and city of Dort. It then divides in o four principal branches, forming the iſlands of Yſſelmonde, Voorn, and Overflackee. The moſt northern branch is called the Merwe, and paſſing by Rotterdam and Schiedam, is joined by the branch from the ſouth ſide of Yſſelmonde, and enters the German Ocean, below the Briel. The other two branches make their exit at Helvoetſluys and the iſland of Goree.

The other ſtream, which, below Emmerick, had branched off to the right, retains its ancient name, for a few miles, when another ſtream branches off to the north, takes the name of Yſſel, and paſſing by Doeſburg, Zutphen, Deventer, and Hattem, enters the Zuider Sea, below Campen. The old river is ſtill recognized, after this ſeparation, and the town of Rhenen takes its name from it; but, at Wyck-by-Duerſtede, it again divides into two ſtreams: that to the left takes the name of the Leck, and paſſing by Vianen and Culemburg, enters the Merwe above Rotterdam. With reſpect to the branch to the right, which ſtill retains its ancient name, we ſhall give its fate, and the concluſion of our hiſtory of this celebrated river, in the words of Dr. Cogan:

'There is ſcarcely an inſtance in all geography, in which a river of ſuch reſpectability has been ſo unfortunate, or ſo ill-treated as the Rhine.' Then deſcribing the different branches already mentioned, he proceeds to give the cauſes of the preſent degraded ſtate of the ſtream, which proceeding to the right of Wyck-by-Duerſtede, ſtill retains its ancient appellation. 'Its diſgrace,' ſays he, 'began at Wyck-by-Duerſtede. An unfortunate accident was the original cauſe of it. The Rhine, in the days of its ſuperabundance, threw off a branch called the Leck, near to the above-mentioned city; and, without the moſt diſtant ſuſpicion of future rivalſhip, directed its courſe toward Utrecht, gave the name of Ultrajectum to that municipal town, paſſed through and dignified Woerden, Leyden, and ſeveral large and populous villages, and finally emptied its accumulated maſs of water into the German Ocean at Catwyk.

'Now it unfortunately happened, in one of thoſe inundations to which the Low Countries are ſo much expoſed, and which frequently threaten their total ruin, that the deluge enlarged and deepened the channel of the Leck, in ſuch a manner, that when the waters ſubſided, the large ſtream of the Rhine was directed into this other channel, and ſcarcely any thing remained of the old bed, but a miſerable brook, and the venerable name! What renders its ſtate yet more humiliating is, this remaining ſtream, deprived of its original force to bear down obſtructions, and to make its way into the ſea, is abſolutely and literally choked up by mountains of ſand, which the tides have brought with them, and the winds accumulated; is ſtopt in its courſe near the village of Catwyk; and being thus obliged to regurgitate, is diſſipated and loſt amid the ſtagnated canals of Holland! What a melancholy end for one of the nobleſt rivers in Europe, the theme of poets, and frequent barrier to the rage of warriors!

'Some people think that old Rhinus, the ancient river-god, may fairly commence an action againſt his offſpring the Leck, for this robbery of the beſt part of his current. Others maintain that the Leck was not to blame, and that he has done nothing more than what every other river would and muſt have done in his place. Some allege that the name of the Rhine ought, in juſtice and in decency, to have been transferred to the

Leek; as there is no proportion between its former and preſent volume of water. They aſk, with an air of triumph, what is it that conſtitutes a river? The channel, or the water that flows through it? Now this appears a deciſive queſtion; for, if we ſay the *channel*, or the track through which the waters *have* paſſed, it follows that a river may remain after it is dried up:—If we ſay the *waters*, then certainly the name ought to follow them. Others evade the argument by aſſerting that rivers are ſubject to the ſame laws with widows and maidens, who change their names, as oft as they change their beds.

'You may imagine the diſpute to be of no moment. What is a mere appellation? you will aſk. But theſe are obviouſly republican notions. You cannot expect that they will be countenanced by nobles and potentates of the earth, or any of their adherents or dependents. A contra-revolution in France is threatened upon this very principle. Yet, my good ſir, what are the names or titles of *men*, though they live to threeſcore years and ten; or of a generation of men, ſhould they boaſt of three or four hundred years, compared with that of a noble river, that has ſeen numberleſs generations ſucceed to each other as rapidly as its own fluids; and that has a natural claim to flow on to the end of the world, if ſomething more than human does not check its current?

'It ſeems to be my fate to officiate as chief mourner on the exit of this great river. Not long after my return from the excurſion, being at Catwyk, I could not forbear repeating my viſits to the laſt remains of flowing greatneſs. Potentates, who, in the zenith of their authority, bore down every thing before them; monarchs, that had diffuſed peace and plenty around them, during the courſe of their longeſt reign, appear not more contracted and compreſſed in their tombs, than the impetuous and majeſtic Rhine, in this ſolitary and diminutive ſpot!

ANECDOTES *of Cardinal* RICHELIEU.

THIS great ſtateſman was intended for the army; but, on his elder brother's giving up the biſhopric of Lucon to become a Carthuſian, he was prevailed upon by his family to take orders, to be put in poſſeſſion of that benefice. He procured the neceſſary bulls for that purpoſe of the pope, then Paul the fifth, by falſifying his baptiſmal regiſter, and, gaining one year by this artifice, he made up the term requiſite by the canons. The pope, not finding out the trick put upon him till it was too late, contented himſelf with ſaying, 'This young man will not ſtop here, I fancy.'

Richelieu performed his exerciſe for the degree of doctor of divinity at the Sorbonne in his epiſcopal robes, he being then not five-and-twenty years of age, and took for his theſis, '*Quis ſimilis mihi*—Who is like to myſelf?'

He early in life attached himſelf to Mary of Medicis, and in the diſputes between her and her ſon, Louis the thirteenth, took her part, for which he was baniſhed to Avignon. There he amuſed his leiſure by writing a 'Catechiſm,' and 'The Inſtructions of a Chriſtian,' which he afterward printed at the Louvre preſs with great ſplendour.

On his return to Paris, with the queen, he was admitted into the council, as ſecretary of ſtate, againſt the opinion of his ſovereign, who told his other miniſters that they would repent of their placing him in ſo eminent a ſituation. Soon, however, in this ſituation, his tranſcendant talents began to diſplay themſelves, and he became prime-miniſter, with a plenitude of power and authority that no miniſter in France before his time poſſeſſed.

He brought his brother from his retreat in a Carthuſian convent, and

made him a cardinal, archbiſhop of Lyons, and grand almoner of France. The brother was dragged unwillingly into public life, and was continually writing to his brother at Paris, to perſuade him to reſign a ſituation in which he had ſo little time to attend to his ſpiritual concerns. Theſe letters the cardinal never read, after he had been a little uſed to their contents.

Richelieu had the merit of inſtituting the celebrated French academy, of eſtabliſhing a ſtandard of the French language; and in a ſeminary which he founded in his native town of Richelieu, he directed that the French language ſhould be the only one taught at it, and that the ſciences ſhould be communicated to the pupils in that language alone.

One trait in the cardinal's conduct muſt ever demand our applauſe. An officious perſon came to his eminence to inform him of certain free expreſſions which ſome perſons of conſequence had made uſe of, reſpecting his character and his conduct, in his hearing. 'Why how now, you ſcoundrel,' replies the cardinal to him, 'have you the impudence to curſe and call me all theſe names to my face, under pretence of their having been ſaid by other particular perſons, who I know entertain the higheſt reſpect for me?' Then ringing his bell, and turning to the page who anſwered it, he ſaid, 'Go, one of you, and turn this troubleſome and malicious fellow down ſtairs.'

Richelieu was, during the whole of his adminiſtration, very ſubject to ſleepleſs nights.—He had ever by his bed-ſide one of his pages to read to him when he was indiſpoſed to reſt. A young man, who had been recommended to him as one of his readers, imagining that the cardinal was aſleep, was looking over ſome papers that lay upon his bed. The cardinal, who had feigned to be aſleep merely to try the young man's diſcretion and honour, darting ſuddenly a look of great ſternneſs upon him, ordered him immediately to leave the room, and never afterward to come into his preſence.

One of the cardinal's maxims was, 'That an unfortunate and an imprudent perſon were ſynonimous terms.' Of his own method of acting, he gave this account to the marquis de Vieville. 'I never dare undertake any thing until I have well conſidered it; but, when I have once taken my reſolution, I go directly to my point. I throw down every thing that ſtands in my way: I cut up every thing by the roots that oppoſes me; and then I cover every thing with my cardinal's robe.—Richelieu uſed to ſay, 'That the favourites of his ſovereign, and their intrigues, gave him more trouble than all Europe taken together.'—The completeſt teſtimony that was ever given to the talents of Richelieu was by Peter the Great, on ſeeing the ſtatue of the cardinal at the Sorbonne. 'This,' ſaid he, 'was a man to whom I ſhould very gladly have given one half of my dominions, if he could have governed the other half for me.'

Richelieu died completely worn out with fatigue of body and of mind, at the age of fifty-eight. A few hours before he died he ſent for M. Chicot, his phyſician, and deſired him, as a man of honour, to tell him what he really thought of his ſituation. 'In four-and-twenty hours,' replied he, 'your eminence will be either dead or cured.'—Richelieu knew very well what this meant, and ſent immediately for his confeſſor, who adminiſtered the laſt ſacraments to him. With his eyes fixed attentively upon the veſſel that contained the holy element, he exclaimed, 'O my judge, condemn me, if, in what I have done, I have ever had any intentions but thoſe of ſerving the king and the country!' His ſovereign, on being informed of his death, ſaid coolly, 'Voila un grand politique mort.

METEOROLOGICAL JOURNAL, May 1795.

D.	H.	Baro.	T.out	T. in	Hyg.	C.	Wind.	Weather, &c.
1	7	29,70	48	52,5	65,5	3	SSW 1	
	2	29,77	59,5	50	52,5	2	WSW 2	
2	7	29,93	48	53	65	3	W 1	hazy. wind N and more cloudy
	2	30,00	60	57	58,5	1	N 2	hazy. lefs cloudy. wind E
3	7	30,21	44	52	67,5	1	N 1	. fine
	2	30,21	60	58,5	57	2	NE 1	hazy. wind E at night
4	7	30,32	47	54	69	0	E 0	hazy. very hazy. cleater
F	2	30,31	61	57	61	0	E 0	hazy
5	7	30,30	51,5	56,5	66	1	SSE 1	azy. wind E
	2	30,24	69	62,5	61,5	2	NNE 1	
6	7	30,33	58	61	66,5	3	N 1	hazy. cloudy
	2	30,35	63,5	63,5	63,5	5	E 1	. fine. cloudlefs but hazy
7	7	30,26	15	57	64	0	E 1	hazy. wind NW
	2	30,21	66	62,5	56,5	1	NW 1	
8	7	30,17	55	60	57	3	NNW 2	
	2	30,33	57	61	54	1	N 3	. lefs wind
9	7	30,43	42,5	52,5	59	0	N 1	
	2	30,32	55	56	54	2	WNW 1	. cloudy : fine
10	7	30,12	51	56,5	60	0	W 1	
	2	30,02	62	64	55,5	2	W 2	. cloudy night
11	7	29,88	50,5	57	59	4	WNW 1	. little rain : fine
	2	30,07	58	59,5	56	3	NNW 2	. little rain. clear night
12	7	30,20	45,5	53,5	58,5	3	N 1	
	2	30,23	55,5	56	55	2	NW 1	. more cloudy
13	7	30,22	49,5	54,5	59	5	W 1	
	2	30,07	57	57	58	5	WNW 1	. little rain
14	7	30,15	46,5	54	60	4	NE 1	
	2	30,16	54	54,5	59	4	S 1	. rain at night. fine
15	7	29,98	48	54	65	5	SW 1	
	2	29,82	56,5	57	58,5	4	W 2	. fine night
16	7	29,87	44	53	62	1	N 1	hazy.
	2	29,95	55	56	55	3	N 1	. cloudy
17	7	29,97	48,5	53	59	4	ESE 1	. fine
	2	29,85	63	59	57,5	2	SE 1	. clear night
18	7	29,87	52	57	61	2	S 1	hazy
N	2	29,92	72	62	55	1	SW 2	
19	7	30,01	55	60	64	1	WSW 1	
	2	30,06	69,5	64	56,5	1	W 2	
20	7	30,32	54	61	61	1	W 1	hazy
	2	30,39	68	64	54	2	NNW 1	hazy. cloudlefs night but hazy
21	7	30,42	55,5	60	62,5	0	SE 1	hazy. wind SW
	2	30,42	72,5	66	56	1	W 1	continual hazinefs
22	7	30,42	59	64	53	1	W 1	hazy
	2	30,37	75	65	57	1	NNW 1	
23	7	30,26	53,5	67	61	1	NNW 1	hazy
	2	30,17	78	72	50	1	W 2	: cloudy
24	7	30,09	55	64	62	5	NE 2	. lefs cloudy
	2	30,10	62	64	59	4	SE 2	. chiefly fine
25	7	30,17	48,5	58,5	56,5	4	NE 2	. fine
	2	30,17	58	59	53,5	2	ENE 2	
26	7	30,19	47	55	56	1	NE 1	. cloudy. more wind and fine
	2	30,22	56,5	58	52	3	NNE 3	. lefs wind. clear night
27	7	30,31	42,5	51	57	4	N 2	
	2	30,34	52	55	53	3	N 2	. chiefly cloudy. fine night
28	7	30,38	44	53,5	56,5	1	NNW 1	
	2	30,26	56,5	55,5	52	3	NNW 1	. cloudy. continual gentle rain
29	7	29,82	50	54	68	6	WSW 1	gentle rain. more wind and chiefly fine
	2	29,69	61	59	61	4	NW 3	. little wet at times
30	7	29,47	44	50,5	61.	5	NNW 2	. fine
	2	29,91	54,5	55	56	3	N 1	. cloudy eve
31	7	29,83	53	56	66	5	S 1	
	2	29,81	58	58	61,5	4	SSW 2	

Remarks *on the State of the* Air, Vegetation, *&c.* May 1795.

1. Oak and elm, in general, begin to foliate; and vines the ſame. Cowſlips in flower —4. The whole day perfectly calm and cloudleſs; but the atmoſphere hazy, and for two days preceding.—6. Apple and cheſtnut tree begin to bloſſom.—8. Lilac in flower.—10. Rye ſhot its ear, and peas and beans in bloſſom.—17. Woodbine and laburnum in flower.—20. Mulberry tree begins to foliate, and hawthorn to bloſſom.—23. The two preceding days remarkably warm, but this more ſo; the thermometer 80 at three in the afternoon: the hygrometer was 50 at the ſame hour, being the firſt time this year it has reached that medium point, between the extremes of dry and moiſt, though ſo little rain has fallen for two months paſt. Apple bloſſom ſeems deſtroyed, in a great degree; but pears, in general, ſet well, and promiſe a plentiful crop. Many webs of caterpillars begin to quicken.—24. A ſudden change in the heat of the air, the thermometer being 18 degrees lower than yeſterday. Peas ſwell in the pod, but the weather continuing dry, the arms begin to wither, and under crops are much at a ſtand for want of rain.—27. Many kidneybeans deſtroyed by froſty nights.—29. Pinks in flower.—31. Syringa in bloom.

Rain 31 hundredths of an inch.

Observations *on the* Diseases *in* May 1795.

Measles were the moſt prevailing diſeaſe during the preſent month, and the ſymptoms were rather ſevere; the cough in general was very troubleſome, the expectoration difficult, the fever conſiderable, and the eruption remained longer than uſual; the cough continued obſtinate long after the other ſymptoms ceaſed, and did not yield to bleeding or other remedies, but was beſt relieved by a removal to the country. The few caſes of natural ſmallpox that occurred, were moſtly of the confluent kind, and proved rather fatal. Jaundice was frequent; and ſcarlet fever appeared here and there, but was by no means general. Conſumptive caſes ſtill continued prevalent and fatal; more have fallen victims to diſeaſes of this kind during the preſent ſpring, than at that ſeaſon for many years paſt.

Monthly Report *of the* Board *of* Agriculture, *&c. for* May.

The appearance of the growing wheats throughout the kingdom, is not ſuch, as to promiſe an abundant crop on the average. They are generally thin even on the beſt corn lands, having died away at the beginning of the month, in the moſt regular plants, from the roots being left too much expoſed by the continued ſeverity of the winter: the ſtock remaining is recovered to a good colour, has branched well, and will, no doubt, prove productive—The harveſt muſt certainly be a late one. The ryes, though not bulky, bid fair for ſetting well.—The cole-ſeeds are every where thin, and not expected to riſe to more than half a crop.—The barleys, which were ſeverely checked by the late cold winds, are much improved from the genial ſhowers, and promiſe well.—The oats are likewiſe mended, but in many diſtricts, particularly in Cambridgeſhire and Lincolnſhire, they will come in two crops.—Peas look kindly on tender lands—but the beans have generally failed, particularly on cold, heavy ſoils, where they ſuffered much by the late ſharp froſty nights.—In the weſt of England their ſoft corn has been much benefited by earlier

ſhowers. The young clovers have planted well, and look healthy, on ſoils in good cultivation. The graſſes are bottoming kindly ſince the rains, in the home diſtricts, and now promiſe more than half a crop, where they did not expect a mow. The hop plantations in Kent, and Suſſex, were in a bad ſtate from the ſudden increaſe of the fly at the cloſe of the month: the market roſe rapidly in conſequence: how far they may have benefited from the late tempeſts will ſoon be known. The wool market is on the ſtart; the preſent prices are,

Fine Welch,	14d. per lb.
South Down,	13
Norfolk,	12d. per lb.
Weſt Country,	9
Long Wool,	6½

Smithfield is ſtill but ſcantily ſupplied with every kind of meat. For one or two market days, indeed, the jobbers poured in great ſupplies in the extreme heat of the weather, by which they ſuffered ſeverely themſelves, and only gave a momentary benefit to the public:—Good beef and mutton are worth 4s. 6d. per ſtone. Lamb is ſomething lower, but ſtill dear. Veal is the moſt reaſonable article.—Lean ſtock of all kinds are very ſcarce, and high priced.

An Account of LLANGUNNER, *in* Carmarthenſhire, *the Reſidence of Sir* Richard Steele: *With Anecdotes of that celebrated Character.*

[From Mrs. Morgan's 'Tour to Milford Haven, in the Year 1791.']

WHEN we were at Carmarthen, we viſited the place that had been the reſidence of ſir Richard Steele. It ſtands near a village called Llangunner, about a mile and a half from Carmarthen. The walk to it is extremely pleaſant. All the way you go you have a view of ſeveral very high hills, covered with verdure; and in the vale beneath the river Towy runs meandring at your feet. The houſe is ſituated in a retired valley, and has no views from it; but the ſcene from the garden and fields above it are very romantic. It is occupied by a farmer, who let us ſee all the rooms, except the one we wiſhed moſt to examine, which was that where ſir Richard uſually ſlept; but the man's wife was ill in it, and could not be diſturbed. However, we could judge by its outward appearance that it was of a piece with the reſt of the houſe, which was very low and ſmall, and never could have been a commodious or fit habitation for a man of his refined taſte. Yet they aſſured us that the whole of it is now ſtanding. This makes it probable that it was only his dernier reſort, at times when his affairs rendered a retreat from the world abſolutely neceſſary. In the latter part of his life indeed he took up his abode there entirely, for there he ended it, and was buried at Carmarthen. Here are ſome old people now living, who remember him when they were children. They deſcribe him to have been, like many men of wit and genius, quite childiſh in his old age, ſo much ſo that he uſed to play with the boys of the place. He was generally carried about in a ſedan chair, and uſed to deſire to be ſet down in the ſtreets to prate with the children, and ſhare with them halfpence and cakes.

In the houſe I have before mentioned he is ſaid to have written his Conſcious Lovers, and perhaps his Chriſtian Hero *; for the ſituation is perfectly calculated to call forth religious and moral ideas; and, at that time of day, it was far removed from the great and the gay, which left him at

* I did not recollect, till after I had tranſcribed this letter for the preſs, that ſir Richard Steele wrote his Chriſtian Hero when he was on duty in the Tower; and it was that ſtation which ſuggeſted to him the beautiful compariſon between the ſituation of a ſoldier on guard and the ſtate of a Chriſtian.

leiſure to reflect upon what men ought to be, rather than what they are. When I compare the delicacy and refinement ſo conſpicuous in the Conſcious Lovers, and the nice ſenſe of religion and morals diſplayed in his Chriſtian Hero, with his general conduct through life, I am almoſt perſuaded to believe the old opinion, that men have two ſouls.

There are ſome diſtant relations of his wife who now live at Carmarthen. Of them I procured a ſight of a three-quarter picture of him, not badly painted. In the ſame piece is a little girl of about ſix years old, which muſt have been done for lady Trevor, when a child. The picture had, or I fancied it, a remarkable elegance in the countenance, and a vivacity and penetration in the eye, which ſeemed perfectly characteriſtic of this great man's genius and diſpoſition. The child bore that very ſtriking reſemblance to her father, which ſhe afterward ſhewed in her future conduct. I am ſo much ſtruck and pleaſed with this picture, that, were I an artiſt, I would certainly take a copy of it, and preſent it to you.

STATE PAPERS.

RESCRIPT of the EMPEROR, preſented by the Imperial Miniſter to the States of the Germanic Empire, in Diet aſſembled at Ratiſbon, on the 4th of May 1795.

THE miniſters of his Imperial majeſty are charged to declare, in the name of his majeſty the emperor and king, to the envoys repreſenting the ſeveral princes and ſtates of the Holy Roman Empire, that his majeſty is ready to enter into negociations with the French republic. His majeſty, without being too mindful of his own intereſt, will conſult thereby the real welfare of the empire, and make it his ſole care to procure to the empire an acceptable, ſolid, and permanent peace. But his Imperial majeſty has alſo, at the ſame time, the juſt confidence in all his co-ſtates of the empire, that they will co-operate, with all their power, to accompliſh this deſirable end, and not enter into ſeparate negociations with the French republic. His Imperial majeſty expects, however, the ſpeedieſt declarations on this ſubject, and the Imperial con commiſſioner will ſoon preſent a declaration from the emperor and king, explanatory of the ſentiments of his Imperial majeſty. In other reſpects his Imperial majeſty cannot conceal, that the ſeparate treaty of peace concluded on the part of his Pruſſian majeſty, even in his quality of a prince and co-ſtate of the empire, has been moſt unexpected to him.

DECLARATION of his Majeſty the KING of PRUSSIA to his Moſt Serene and Illuſtrious Co-ſtates of the Empire, relative to the Treaty of Peace concluded with the French Republic on the 5th of April 1795.

HIS majeſty the king of Pruſſia, &c. now ſees himſelf in the happy ſituation to announce to his moſt ſerene and illuſtrious co-ſtates of the empire an event, the happy conſequences of which concern alſo very intimately the whole Germanic country. The eventful war, which ſpread long enough for ſuffering humanity death and devaſtation to ſo wide an extent, has now found its termination on his part.

A happy concluſion of peace has been ſigned between his majeſty and the French republic on April 5, 1795, at Baſle, and afterward mutually ratified: it affords again tranquillity and undiſturbed welfare to the Pruſſian territories, opens at the ſame time to all the ſtates of the empire a beaten road to attain in a like manner the bleſſings of peace, and gives already at this moment protection and ſecurity to a great part of Germany againſt the horrors and ravages of war. With juſt confidence in the aſſent and approbation of the whole Germanic empire, the king's majeſty does therefore not delay to manifeſt with candour his motives, his ſentiments, and wiſhes, with regard to this treaty.

His majeſty is fully convinced and conſcious, that if his motives have been principally dictated by the concurrence of imperious circumſtances, his ſentiments have always been pure, his intentions always well-meaning, as well in this point as in the whole courſe of the great concern which occupies Europe. He can with ſatisfaction leave it to his obſerving contemporaries, and to judging poſterity, to ſhow,

that during the whole courſe of this war, his intereſt has not been indirect or ſelfiſh; that, without any regard to his own advantage and benefit, he could ſhare in the deliverance and defence of diſtreſſed Germany, only from a pure zeal for the public weal, and from refined patriot ſin.

To this generous and common end, the king indeed has not only fulfilled in the faithfulleſt and completeſt manner his engagements as a confederate and ſtate of the empire, but much beyond this mark. He made, with unprecedented exertion, all the ſacrifices which the reſources of the Pruſſian dominions would allow: he has fought, during three bloody campaigns, with a choſen and great army, an enemy ſo formidable by his power and the fortune of war, in ſome meaſure at a great diſtance from the Pruſſian territories, on a foreign and moſtly exhauſted ſoil, amid the moſt exorbitant dearth of all neceſſaries, amid the moſt cumberſome obſtacles of all kinds, and an immenſe efflux of money from his territories; in order to check the torrent of the enterpriſes of this enemy from the Germanic empire, he has done all that depended on him, exhauſted all, and exerted his whole power to gain the hard-earned merit of having been, in the moſt perilous criſis, the protector and deliverer of Germany. The future German generations will own with gratitude, that they chiefly were the Pruſſian armies which ſaved with expedition and energy the empire from that firſt irruption with which general Cuſtine ſurpriſed it terribly, and in its very heart, while it was ſtill unprepared, and had not yet declared war: that they were Pruſſians who drove the enemy from the anterior territories of the empire, after they had penetrated into them with ſuperior numbers; that they were chiefly Pruſſians who re-captured Mentz and Frankfort, and re-united and ſhielded Germany, already torn; that thoſe armies covered, during the three campaigns, like an unſhaken bulwark, the greateſt part of the river Rhine, which on the right and left, diſaſter upon diſaſter fell upon the arms of the allies; that after, by the continuance of the misfortune of the allies, the United Netherlands were alſo loſt, and the defenceleſs northern part of the empire ſtood open to the enemy, they haſtened where the danger threatened moſt imminently, ſaved and protected beſide the king's Weſtphalian provinces, the whole circle of that name, and all the countries behind it.

And in this ſervice of the common country, ſo much Pruſſian blood was ſhed, and ſuch enormous ſums of money expended from the Pruſſian ſtates, at a time while the king was partly involved in another war, and obliged to defend with the reſt of his military force the diſtant provinces of his monarchy againſt the inſurrection and incurſions of the neighbouring Poles.

But it was plain to every obſerver of the political forces and relations of a ſtate, that that war, carried on on both ſides with ſuch high ſpirited proweſs; that ſo depopulating, ſo deſtructive, ſo extremely expenſive, and in every reſpect ſo melancholy a war, eſpecially on account of its diſtance from the Pruſſian territories, muſt in proceſs of time uncommonly affect their forces, and ultimately render impoſſible the continuance, of a foreign conflict of this kind.

His majeſty has without reſerve, and ſeveral times, ſignified this to his high confederates and co-ſtates of the empire. This happened particularly in the beginning of laſt year, when he was obliged to inform the Germanic empire, that it was become impoſſible for him to bear any further the burden of a war, till then ſolely carried on from his own reſources, without ſupport and facility; and that the empire, unleſs the greateſt part of his troops ſhould retreat from the field, and abandon it to its own defence and fate, ought to take charge of the maintenance of thoſe troops. The propoſitions made for this purpoſe met almoſt every where in the empire with indifference, apathy, and diſapprobation; a reception which, in truth, correſponded but little with the well-meaning views of the king, with his protection, ſo eſſential to the empire, and which neceſſarily induced the king to reſolve, even then, to act according to his declaration.

At that ſame period, offers of ſubſidy were made to the king on the part of the court of Great Britain, which tended to remove the cauſe of that reſolution, and to give to him the means of continuing the war. His participation in it till now, has but too much been the diſintereſted reſult of a faithful ſolicitude for all his connexions and engagements, and of a honeſt zeal to counteract, as much as poſſible, the wide ſpreading ravages of the faction which then reigned in France, and of her horrors, which had riſen to the higheſt degree: too much the pure work of genial patriotic devotion to the common Germanic country, and of a profound and anxious deſire to prop up with all his might its

impaired conſtitution, and its tranſient proſperity; his majeſty liſtened to the propoſals of Great Britain, and the diſtreſſed empire continued to enjoy the protection of the Pruſſian arms.

Had the king choſen at that period, by virtue of his previous declarations, to abandon the empire to itſelf, and to its feeble means of defence, its melancholy fate would perhaps ere now be decided. At that epoch, when there was not the leaſt ſtreak of the dawn of peace to be ſeen, when nothing but misfortunes ruſhed like ſtorms every where upon the German frontiers and its anterior diſtricts, and an anxious perplexity foreboded, that after the ſad cataſtrophe of all the countries of the empire on the other ſide of the Rhine, the fate of the Imperial royal Netherlands, which were defended with the utmoſt vigour, and nevertheleſs conquered, and the fate of the United Provinces, which were then more and more threatened with danger, would alſo be the fate of the more defenceleſs and major part of Germany.

The king, however, remained the defender of the Germanic empire in its moſt critical minute; his army marched ſoon to the moſt threatened part, the north of Germany, and ſaved it likewiſe from the enemy, who was advancing with ſuperiority, and accuſtomed to victory.

But this laſting ſacrifice, the march of a numerous army to Weſtphalia, and the very difficult and expenſive mode of ſupporting it, in a country partly ſo ſterile in corn, partly ſo exhauſted, became the laſt poſſible effort of the reſources of Pruſſia in this war. After a conſtant and almoſt infinite efflux of money from the Pruſſian dominions during three years; after three years unremitting war; after the inceſſant fatigues and decreaſe of troops; after the Pruſſian provinces on the other ſide of the Rhine had fallen into the hands of the enemy; after the trying influence of theſe circumſtances upon the population, the ſubſiſtence and proſperity of the remaining provinces; the continuation of the war, at his majeſty's ſole expence, became an abſolute impoſſibility.

And from what other quarter could his majeſty find reſources and eaſe, if even the empire objected to the maintenance of the Pruſſian troops who fought for its defence? Even while thoſe troops were in danger in exhauſted Weſtphalia, of having to combat the moſt terrible foe—want; while all the neighbouring and backward countries longed at the ſame time for their protection and guard; all thoſe ſtates would by no means conſent unanimouſly to grant a free exportation for the army, ſtill leſs to eſtabliſh magazines for it at their own expence. Even the extraordinary and enormous expences which the king incurred by the recapture of Mentz*, and other ſimilar exploits, where the Pruſſian army alone performed with vigour and effect what it belonged to the army of the empire alone, to have performed, are not yet refunded to him, though the chief of war of the empire exiſts entirely for paying ſuch expences; though ſuch conſiderable ſupplies in Roman months have been repeatedly voted by the ſtates of the empire; though his majeſty has already ſo often and urgently made his inconteſtible demands, and is willing to diſcount from it the Roman months or ſupplies to be paid by his territories to the empire.

And upon what co-operation in the war on the part of others can his majeſty depend in future, eſpecially ſince, by the defection of the United Netherlands, the maſs of the forces which have to combat the enemy of the empire, has been ſo conſiderably leſſened; and juſt the weakeſt part of Germany has been opened to that enemy, to force his way into the heart of it? Every where, alas! are the melancholy omens of a laſting diſgrace to the allied arms, which cannot even excite any fair hopes for the future. Every where, and from all ſides, appears the deepeſt exhauſtation, the natural reſult of ſuch uncommon efforts. His Imperial majeſty himſelf, upon whom reſts the principal conduct of the war, owing to a manifold, urgent, and immediate intereſt, already about the middle of laſt year concealed it no farther from the Germanic empire that, without a ſpeedy and ſufficient ſupply in men and money, he would not be able to ſave it. And what remained then to be expected of the empire itſelf, which was afterward, while the danger increaſed, more and more left to itſelf, and to the weakneſs of its diminiſhing means of defence, that it reſolved to raiſe the latter to the quintuple contingent of the armament of the empire, but of which no farther effect could be hoped, than there had been

* According to the moſt moderate official accounts delivered to the diet, the expences of the re-capture of Mentz amount to 2,083,961 rix dollars, 21 groſch and 2 pennings.

hitherto of the triple contingent, ſince ſo many countries of the empire, by the force of the French arms, were deprived of all kind of co-operation, while moſt of the ſtates of the empire were exhauſted, partly by the diſaſters and expences of the war, partly too weak themſelves, and not prepared; and ſince experience has but too much taught us, not only in the preſent, but in every former war of the Germanic empire, that the military conſtitution of Germany bears too many blemiſhes of a whole compoſed of ſo many parts, and is not every where ſufficiently efficacious without the aſſiſtance of other powers.

All conſiderations on theſe, and many other relations, became certainly the more urgent and inviting; as, at the termination of the laſt unſuccefsful campaign, the criſis threatened on one ſide to reach the moſt dangerous point, but on the other, there began to riſe in France, from the ruins of the precipitated ſyſtem of terror, a more ſolid government of moderation and temperance; and the wiſe ſentiments of its being in want of peace. At this period there could be but one wiſh, but one longing deſire in Germany.

If after three bloody campaigns, fertile in death and devaſtation, the reſources of the war were entirely drained, and all hopes of its further continuance vaniſhed; if it became powerfully manifeſt, that the Almighty hand of Providence had given to the torrent of the hoſtile exploits at once ſo decifive a turn, and that all further attempts to reſiſt it would prove fruitleſs; if the enemy himſelf is not diſinclined to embrace the offer of peace, and all hopes appear of obtaining it ſooner than by an obſtinate continuance of the war, did there ſtill remain any choice? Could a wiſe and humane prince then wiſh to ſee the horrors of the war ſpread ſtill farther, without meaſure, and to no purpoſe? Were not the provinces already overwhelmed with miſery, ſufficiently ravaged? Was not ſuffering humanity bent ſufficiently low?

His majeſty opened therefore his whole heart to the juſt wiſh of ſoon reſtoring tranquillity and peace to the Pruſſian dominions, and, if poſſible, to the whole Germanic empire. The latter likewiſe felt and manifeſted almoſt univerſally the ſame wiſh, and began already a formal deliberation upon the means of gaining ſuch an important end. At the ſame time whole circles of the empire, and ſeveral of the firſt Germanic princes applied to his majeſty with the requeſt, to help, in concert with his Imperial majeſty, to procure to the empire an armiſtice, and afterward a peace. By the patriotic zeal of ſeveral ſtates ſolicitous of their own welfare and that of the empire, the well-known advice of the empire ſoon followed, in which it declared with dignity and conſiſtency its wiſh of peace, and deſired of the ſupreme chief of the empire, an introduction to an attempt of obtaining peace, and a concert with the king for his majeſty's co-operation.

However, this introduction of his Imperial majeſty being the main point to which the good offices of the king's majeſty could only approach as ſecondary, followed as little as a proper concert with his majeſty. On the other hand, all the proceedings have been entered upon, to make all the illuſtrious ſtates furniſh their contingents for the campaign of the preſent year to the army of the empire, however weak and hopeleſs it may further prove; and there appeared conſtantly the ſad proſpect, as if the empire, notwithſtanding its pacific inclination ſo ſolemnly manifeſted, ſhould remain farther involved in this unfortunate war.

But the king's majeſty, who has already, in a combat of three years, made the utmoſt efforts for the empire, and the moſt enormous ſacrifices, cannot add to theſe impoſſibilities. His majeſty cannot wholly ſacrifice himſelf, and leave his dominions entirely a prey to deſtruction, for the ſake of participating only in a further experiment of the war, the reſult of which, were it even as favourable as poſſible, would ſtill be inferior to a preſent negociation of peace. All conſiderations of domeſtic and foreign relations, as likewiſe the ſacred duties which his majeſty owes to the proſperity of his provinces, to his ſubjects longing for peace and tranquillity, and to the happineſs of his own royal boſom, ſummon him moſt urgently to renounce forthwith a war, whoſe further iſſue muſt only prove ruin paſt redemption.

The king could not therefore forego the opportunity of opening and carrying on negociations of peace between his own and a French plenipotentiary in the city of Baſle; his majeſty's beneficent views have been bleſt with a happy iſſue; and his majeſty may now enjoy the patriotic and paternal ſatisfaction of having reſtored, by the treaty of peace with the French republic, tranquillity, and new and undiſturbed proſperity to his dominions.

But his majeſty has conſulted in this weighty tranſaction, with the pureſt patriotic care, as much as poſſible, the com-

mon weal of the Germanic empire. His majeſty has by no means been able to procure and negociate for it immediately a formal and effective peace; becauſe his majeſty wanted in this point the main preliminary introduction, and the concert, not having enſued on the ſupreme head of the empire, a direct and definitive authorization on the part of the empire, a legitimation ſufficient in the eyes of the French government, and a more exact knowledge of the ſpecial conditions of peace, deſired and rendered applicable on every part. Meanwhile his majeſty, duly conſidering the melancholy ſituation of the Germanic empire, after the repeated requeſts addreſſed to him by ſeveral illuſtrious ſtates, has done every thing which could depend on him, to pave as much as poſſible the way by which the whole empire and all the ſeparate ſtates might obtain ſoon the accompliſhment of ſo juſt a deſire.

For this purpoſe, a favourable ſtipulation is expreſsly contained in his majeſty's treaty with the French republic, for all thoſe ſtates of the empire who ſhall, within the ſpace of three months, make propoſals of peace to the republic, and in whoſe behalf his majeſty ſhall exert himſelf. At the ſame time, and by virtue of a ſeparate agreement, a certain line of neutrality has already been fixed for all northern Germany, which ſhall put a ſtop to the warlike operations on all ſides, and afford perfect ſafety and tranquillity to all the countries ſituate behind it, whether they belong to Pruſſia, or to the empire, on condition of their abſtaining, directly and indirectly, from all acts of hoſtility. At the ſame time, the liberation of all the priſoners of war taken on the part of the French, being troops of the empire, which were ſtationed in the field with his majeſty's army, was likewiſe ſtipulated.

Theſe are the advantages which his majeſty can offer at preſent to his illuſtrious co-ſtates of the empire. His majeſty flatters himſelf, that it will not fail to make a due impreſſion upon them all, eſpecially the general utility of the former point. By it is held forth to them all, the hand of peace and reconciliation, and will they diſdain it untried?

His majeſty likewiſe declares in a ſolemn manner, that he will take upon him with ſincere and cordial readineſs, the patriotic taſk, to grant in the moſt effective manner his ſupport to all thoſe who ſhall immediately addreſs to France their wiſhes of peace, and to ſtrengthen in all points the French republic in the beſt manner, in her favourable pacific diſpoſition.

His majeſty will deem himſelf very fortunate, his moſt fervent wiſhes will be fulfilled, and his manifold ſacrifices, made hitherto for the common weal, will obtain the faireſt reward, if theſe efforts and this occurrence do not miſs, to ſpread ſpeedily again the bleſſings of peace; if the horrors and ravages of ſo calamitous a war, be ſoon entirely removed from the whole Germanic territory, and if peace and tranquillity be again given to the good Germanic citizen for the happy exerciſe of his peaceful duties; if even the remaining nations of Europe ſhould ſoon let ſuch bloody diviſions be ſucceeded by reconciliation, in order to be again able to obtain the ſole and grand end of all governments in the tranquillity and proſperity of their citizens.

But what courſe ſoever theſe momentous affairs may take, and ſhould adverſe fate have doomed the empire to a further proſecution of the war, his majeſty can only make this expreſs and definite declaration, that he ſees himſelf obliged by his treaty, to renounce completely all further participation in the war, and all co-operation by furniſhing contingents, or furniſhing the uſual ſupplies of the Roman months, and to keep up the ſtricteſt and moſt punctual neutrality. His majeſty, it is but too true, has performed in the fulleſt meaſure his duties, as a ſtate of the empire, which he will always acknowledge and never retract from, by the enormous ſacrifices in the three laſt campaigns; and his majeſty has unequally exerted himſelf to a higher pitch than ſhould have been required of him for many years to come, than all the illuſtrious ſtates have indeed hitherto done; his majeſty is therefore, in this reſpect, in pure conviction, ſuperior to every apprehenſion of reproach.

His majeſty carries with him upon the whole, the conſolatory and remunerating conviction, to have really contributed, to a degree of phyſical impoſſibility, to the Germanic empire, and to the preſervation and ſecurity of its conſtitution and tranquillity, all he could indeed contribute, as well by a moſt vigorous proſecution of the war during three years, as likewiſe by having paved the road to peace with patriotic ſolicitude. To gain by this road, the end of the preſent ſtruggle, tranquillity and ſafety, to profit for this purpoſe by the favourable proſpects already open, by the proffered ſupport of the king, and the moderate and equitable ſentiments and poin-

ciples of the French republic—all [this his majeſty muſt leave with confidence to the enlightened approbation of his moſt ſerene and illuſtrious co-ſtates of the empire themſelves.

(Signed) FREDERIC WILLIAM.

Berlin, May 1, 1795.

ADDITIONAL CONVENTION concluded in conſequence of the Treaty of Peace of April 5, 1795, ſigned at Baſle, between Baron Hardenberg, the Pruſſian Miniſter Plenipotentiary on the one part, and Citizen Barthelemy, the Miniſter of the French Republic, on the other *.

Article I. IN order to remove the theatre of war from the frontiers of the territories of his Pruſſian majeſty, to preſerve the tranquillity of the north of Germany, and to reſtore the entire freedom of commerce between this part of the empire and France, as it has been before the war, the French republic conſents not to extend her warlike operations either to thoſe countries and ſtates which are ſituate beyond the following line of demarcation, nor to let her troops, naval or military, enter them. This line will compriſe Eaſt Frieſland, and go down along the Ems and the Aa, or Alpha, as far as Munſter, then take its direction to Coesfeld, Borcken, Bockholt, as far as the frontier of the duchy of Cleves, near Iſſeburg; follow this frontier at Magenheim on the New Yſſel; aſcend the Rhine as far as Duiſburg, from thence along the frontier of the county of Mark to Vreden, Germerk and along the Wipper, to Hembourg, Altenberg upon Lahn, Limburg upon Lahn, along his latter river and that which comes from Idſtein; then extend from this place, Ephem and Hochet on the Mayn, then follow the brook which flows through this place to the frontiers of the palatinate, including the ſpace between Raunheim and Dornheim; to continue farther the frontier of Darmſtadt and the circle of Franconia, which the line ſhall entirely include, to Eberſbach on the Necker; then the courſe of this river to the free imperial city of Wimpfen, and from thence to Loewenſtein, Murhard, Henenſtadt, the free Imperial city of Nordlingen and Holtzkirn on the Wernitz, alſo the county of Pappenheim, and the whole circle of Franconia, and Upper Saxony, along Bavaria, the Upper Palatinate, and Bohemia, to the frontiers of Sileſia.

The French republic will conſider as neutral ſtates and countries all thoſe which are ſituate behind this line, on condition that they obſerve on their part a ſtrict neutrality, the firſt point of which would be to call back their contingents with the army of the empire, and to enter into no freſh engagements which would authoriſe them to furniſh troops to the powers at war with France. Thoſe who ſhall not fulfil theſe conditions, to which the king will endeavour to perſuade them, ſhall be excluded from the benefit of the neutrality. His Pruſſian majeſty takes upon him, that as far as the above line of demarcation is on the right bank of the Rhine, to guarantee, that no troops hoſtile to France ſhall paſs the ſaid line, or come from the countries included in it, to combat the French armies. For this purpoſe both contracting parties, after having concerted with each other will keep ſufficient corps of obſervation on the principal points, to make this neutrality reſpected. The paſſage of troops, whether they belong to the French republic, to the empire, or to Auſtria, ſhall however remain free on thoſe routes which lead on the right bank of the Mayn, through Franckfort to Koenigſtein and Limburgh toward Cologne; to Haderſtein, Wiſbaden and Naſſau, toward Coblentz; laſtly, to Haderſtein againſt Mentz, and *vice verſa*; as likewiſe all thoſe countries which are on the left bank of this river, and in the whole circle of Franconia, yet without the leaſt prejudice to the neutrality of all the ſtates and countries included in the line of demarcation.

Article II. As the county of Sayn Alterkirchen, on the foreſt of Weſterwald, beſide the little diſtrict of Bendorff, below Coblentz, are in poſſeſſion of his Pruſſian majeſty, it ſhall likewiſe enjoy the ſame ſecurity and advantages as his majeſty's other dominions ſituate on the bank of the Rhine.

CONVENTION between his BRITANNIC MAJESTY and the EMPEROR of GERMANY.

THE emperor and the king of Great Britain, being equally convinced of the neceſſity of acting with vigour and energy againſt the common enemy, in order to procure to their reſpective dominions a ſafe and honourable peace, and to preſerve Europe from the danger with which it is

* See Page 294.

threatened, their Imperial and Britannic majeſties have thought proper to concert together upon the meaſures to be adopted for the next campaign, and to agree, for this purpoſe, on ſuch ſtipulations, as may beſt conduce to the ſalutary object of their intentions already mentioned. With this view their majeſties have appointed their reſpective plenipotentiaries; that is to ſay, his Imperial majeſty, his privy-counſellor actual, and miniſter for foreign affairs, baron de Thugut, commander of the order of St. Stephen; and his Britannic majeſty, ſir Morton Eden, K. B. one of his majeſty's moſt hon. privy-council, and his envoy extraordinary and miniſter plenipotentiary at the court of Vienna; who, after having communicated to each other their reſpective full powers, have agreed upon the following articles:

Art. I. In order to aſſiſt the efforts which his Imperial majeſty is deſirous of making, and to facilitate to him the means of bringing forward the reſources of his dominions, in the defence of the common cauſe, his Britannic majeſty engages to propoſe to his parliament to guaranty the regular payment of the half-yearly dividends, on the ſum of 4,600,000l. ſterling, which is, or is to be raiſed, on account of his Imperial majeſty, on the terms and in the manner ſpecified in the two engagements or octrois, the tenor of which is annexed to this convention; his Imperial majeſty ſolemnly engaging to his Britannic majeſty that he will make due proviſion for the regular diſcharge of the payments which ſhall become due in conſequence of the ſaid loans, ſo as that thoſe payments ſhall never fall as a burden to the finances of Great Britain.

II. In return for the ſtipulation contained in the preceding article, and by the means of the ſaid loan of 4 600,000l. ſterling, aſſured by the guarantee of Great Britain, his Imperial majeſty ſhall employ in his different armies, in the enſuing campaign, a number of troops, which ſhall not only amount at leaſt to 200,000 effective men, but which his Imperial majeſty will exert himſelf, as much as poſſible, to augment even above that number: which troops ſhall act againſt the common enemy, according to the diſpoſitions agreed upon by a ſecret article, forming a part of this convention.

III. The emperor will ſee with pleaſure the appointment of general officers, or other perſons of confidence, to be preſent with his armies on the part of his Britannic majeſty, to whom all the neceſſary communication and information will be furniſhed, with reſpect to the ſtate and ſtrength of the armies, and the number of troops of which they may conſiſt; and if, in order to facilitate and promote the correſpondence and communication between the armies of the two courts, his Imperial majeſty ſhall think proper to ſend an officer, or other perſon, on his part, to the Engliſh armies, they ſhall, in like manner, receive from the generals of his Britannic majeſty all ſuch marks of confidence as are moſt analogous to the intimate union ſo happily ſubſiſting between the two courts.

IV. It is expreſsly agreed, that the ſaid loan is to reſt on the ſecurity of all the revenues of all the different hereditary dominions of his Imperial majeſty. All the neceſſary meaſures ſhall be taken on the part of his Imperial majeſty, in each of the ſaid dominions reſpectively, to give full and legal effect and validity to the ſaid loan, and to the engagements for the regular payment of the half-yearly dividends which ſhall fall due in conſequence thereof, ſo that if at any time there ſhould happen, from whatever cauſe, to be any delay in any of the payments, after the period of their falling due, the holders of the ſecurities granted, or to be granted, on the part of his Imperial majeſty for the ſaid loan, may ſue the receivers or treaſurers of his Imperial majeſty's revenues, in any of the ſaid dominions reſpectively, at the option of ſuch holders, and may recover from them, or any of them, by due courſe of law, the full amount of ſuch payments having ſo fallen due, in the ſame manner as any private individuals are admitted in the ſaid dominions reſpectively to proſecute and recover their juſt rights againſt other private perſons.

V. If it ſhould ever happen that, contrary to all expectation, any part of the dividends due on the ſaid loans ſhould, in conſequence of the failure of the payments ſtipulated to be made by his Imperial majeſty, be paid by the Britiſh government, it is agreed that ſuch payments ſhall be made at the Bank of England, and only on the delivery of tallies or certificates of the dividends ſo reſpectively paid; and every ſuch tally or certificate ſo delivered up ſhall be valid and legal ſecurity, ſo as to enable the holder thereof to ſue any of the receivers or treaſurers of his Imperial majeſty's revenues, in any of his dominions aforeſaid, at the option of ſuch holder, and to recover from them, or any of them, the full amount of the ſum expreſſed in ſuch tally or certificate, with intereſt thereon at

the rate of five per cent. per annum, to be reckoned from the date of the payment to be made by th Britiſh government. And whereas it is provided, in the terms agreed upon for raiſing the ſaid loans, that, as a collateral ſecurity for the ſaid loans, there ſhall be depoſited in the Bank of England mortgage actions of the Bank of Vienna, for a ſum, in the proportion of four to three of the loan to be ſo raiſed; it is further agreed, that the governor and company of the ſaid bank ſhall, in caſe of any ſuch payment as aforeſaid being made by the Britiſh government, be authoriſed to withdraw from the ſaid depoſit ſuch a quantity of the ſaid actions, as ſhall be required to make up at leaſt the proportion of four pounds for every three which ſhall be ſo paid by the Britiſh government, to be by the ſaid government either uſed as a ſecurity or claim upon the bank of Vienna, until re-payment of the ſaid ſum, and of the intereſt due thereon, or negociated at the time to ſuch extent as may be neceſſary in order to effect ſuch reimburſement, according as to the ſaid government may ſeem moſt eligible; and that the quantity of actions directed the committee of legiſlation to report on ſo withdrawn ſhall be deducted from or ſet off againſt any quantity, which, according to the terms of the ſaid loan, might thereafter be to be withdrawn from the ſaid depoſit, in proportion to the gradual redemption of the bonds, and the payment of the annuities, as is ſpecified in the conditions of the ſaid loan.

VI. And whereas certain advances have been made by the Britiſh government to his Imperial majeſty on account and by way of loan; it is agreed that the ſame ſhall be repaid at London in the courſe of the preſent year, in exchange for the receipts given by the generals commanding in chief the Imperial army, and conformably to the ſums contained in the ſaid receipts. The ſaid advances ſhall be reimburſed at lateſt, in two equal parts, in the months of November and December, ſo that the total ſhall be reimburſed before the expiration of the preſent year.

VII. The preſent convention ſhall be ratified on each ſide, without any delay, and the exchange of the ratifications, expedited in due form, ſhall be made within the ſpace of one month at lateſt.

In witneſs whereof we, the underſigned, being furniſhed with the full powers of their Imperial and Britiſh majeſties, have in their names ſigned the preſent act, and have thereto ſet the ſeal of our arms.

Done at Vienna, the 4th of May, 1795. LE BON DE THUGUT. MORTON EDEN.

Tenour of the Second Octroi.

Francis, by the Grace of God, Emperor of the Roman, &c. To all who ſhall ſee theſe preſents, greeting:

The wants of our ſervice requiring an augmentation of extraordinary reſources, we have reſolved to open a new loan of 1,600,000l. ſterling, at the houſe of Walter Boyd, Paul Benfield, and James Drummond, merchants, at London, under the firm of Boyd, Benfield, and co. upon the ſame engagements, conditions, and ſtipulations, as that of 3,000,000l. ſterling, already opened by them on our account by the Octroi of the 18th of May 1794; which engagements, conditions, and ſtipulations ſhall be deemed to be herein inſerted, at the ſame rate of proportion as exiſts between the capital ſums of the two loans; provided that, for the ſecurity of the lenders, as well as thoſe who are or ſhall be concerned in the firſt loan of 3,000,000l. ſterling, as thoſe who ſhall be parties in the preſent, we engage, aſſign, and deſtine thereto, by the preſent Octroi, all our royal revenues in our hereditary dominions, kingdoms, and provinces, without exception; engaging, moreover, in further augmentation of the ſecurity for the ſecond loan, as we have done for the firſt, to remit, as a collateral ſecurity, to the ſaid meſſrs. Boyd, Benfield, and co. a ſhare in mortgage of the bank of Vienna, bearing an intereſt of five per cent. for a ſum proportioned to this ſecond loan, upon the footing ſtipulated by the 12th article of the Octroi of the 18th of May 1794, above recited. For ſuch is our good pleaſure.

In witneſs whereof we have ſigned theſe preſents, and cauſed our great ſeal to be ſet thereto, given at Vienna, the 4th of May, in the year of our Lord 1795, and of our reigns of the Roman empire and of the hereditary dominions the third year.

(Signed) TRAUT, Vt.
FRANCIS. By the Emperor and King.
P. DU RIEUX.

TREATY of ALLIANCE Offenſive and Defenſive, concluded between the REPUBLIC of FRANCE and the REPUBLIC of the UNITED PROVINCES.

Article I.

THE republic of France acknowledges and guarantees the independence of the republic of the United Provinces, as alſo the abolition of the ſtadtholderſhip.

ART. II. There ſhall be a laſting peace, amity, and good underſtanding between the two republics.

Art. III. There ſhall alſo be an alliance, offenſive and defenſive, againſt all the enemies of the reſpective republics during the preſent war.

Art. IV. There ſhall alſo be a laſting alliance, offenſive and defenſive, againſt Great Britain.

Art. V. No treaty ſhall be entered into with Great Britain, without the conſent of the two republics.

Art. VI. The French republic ſhall make no peace with any power whatever, without comprſing in it the republic of the United Provinces.

Art. VII. The republic of the United Provinces ſhall furniſh for the preſent campaign twelve ſhips of the line and eighteen frigates, for the North Sea and the Baltic.

Art. VIII. The republic of the United Provinces ſhall furniſh for the preſent campaign half the number of the troops which the republic ſhall have on foot.

Art. IX. All the forces employed in actual ſervice ſhall be under the command of the French generals. The arrangements for the campaign ſhall be made in concert; the ſtates-general may ſend a deputy, who ſhall ſit and have a deliberative voice in the committee of public welfare at Paris.

Art. X. All arſenals and ammunition belonging to the republic of the United Provinces ſhall be reſtored.

Art. XI. From the ratification of the preſent treaty, reſtitution ſhall be made of all the countries and places belonging to the United Provinces, with the exceptions contained in the following article.

Art XII. Dutch Flanders and the right ſide of the Hondt, Maeſtricht, Venlo and their dependencies, ſhall be reſerved by the French republic, as indemnities.

Art. XIII. A French garriſon ſhall be admitted in peace and war into the town of Fluſhing, until other arrangements ſhall have been decided.

Art. XIV. The port of Fluſhing ſhall be open to the two republics, conformably to the rules laid down in the ſeparate articles attached to this treaty.

Art. XV. In caſe of hoſtilities on the ſide of the Rhine, or of Zealand, French garriſons ſhall be admitted into Breda, Bois-le-Duc, and Bergen-op-Zoom.

Art. XVI. At the epoch of a general peace, ceſſion ſhall be made to the United Provinces of portions of territory equivalent in extent to the ceſſion contained in the 12th article, and in a poſition moſt convenient to the republic of the United Provinces.

Art. XVII. Until the general peace, ſuch a number of troops ſhall be ſtationed in the neceſſary places as ſhall be deemed adequate for the defence of them.

Art. XVIII. The navigation of the Scheldt and the Hondt ſhall be open to the two republics; French and Dutch veſſels ſhall be indiſcriminately admitted under the ſame conditions.

Art. XIX. The French republic gives up to the republic of the United Provinces, all the unmoveable effects belonging to the houſe of Orange, and all the moveable property not already diſpoſed of.

Art. XX. As an indemnification for the expences of the war, the republic of the United Provinces ſhall pay to the republic of France one hundred millions of livres, either in ſpecie, or in bills upon foreign powers, as ſhall be agreed upon.

Art. XXI. The French republic ſhall uſe their good offices with foreign powers in favour of the United Provinces, in order that they may obtain the payment of the ſums due to them before the war.

Art. XXII. No aſylum ſhall be given, by the republic of the United Provinces, to the French emigrants; and no aſylum ſhall be given by the republic of France to the Orange emigrants.

Art. XXIII. The preſent treaty ſhall be ratified within two decades, or ſooner if poſſible.

SEPARATE ARTICLES relative to the Port of Fluſhing.

Art. I. The two nations ſhall indiſcriminately make uſe of the ports and docks.

Art. II. Each nation ſhall have timber-yards, &c.

Art. III. From the ratification of the preſent treaty, the republic of the United Provinces ſhall relinquiſh the building for the Weſt India company and the ground adjacent to it, and alſo one of the docks.

Art. IV. All new acquiſitions for the conſtruction of freſh arſenals, and all acquiſitions of ground, ſhall be made at the expence of the French republic.

Art. V. The expences of the repairs of the baſin, and the quay, ſhall be defrayed by the two republics, but the direction of the remainder ſhall belong to the republic of the United Provinces. The French republic, however, ſhall be informed of every operation, and the *proces verbaux* ſhall be ſent to the French government, who will defray half the expence.

Art. VI. No admiral's ſhip, nor guard-ſhip belonging to either of the two republics, ſhall be in the port of Fluſhing.

Art. VII. If any diſpute ſhould ariſe relative to the foregoing regulations, which ſhall not be amicably adjuſted, they ſhall be decided by five arbitrators; two of whom ſhall be French, and two Dutch; and for the fifth, each republic ſhall chooſe one, and it ſhall be decided by lot.

Art. VIII. Theſe regulations ſhall be carried into execution, as part of the treaty of alliance, offenſive, and defenſive, between the republic of France and the republic of the United Provinces.

Concluded at the Hague, on the 15th of May, at noon, 1795.

THE BRITISH MUSE.

ODE, for his MAJESTY's BIRTH-DAY.

By HENRY-JAMES PYE, Eſq. Poet-Laureat.

NOT from the trumpet's brazen throat,
Be now the martial meaſure blown;
Mild concord breathes a ſofter note,
To greet a triumph all her own:
Wafted on pleaſure's downy wings,
A nearer joy than conqueſt brings,
Now ſoothes the royal parent's breaſt;
By roſy wreaths of hymen bound,
A nation's fervent vows are crown'd,
A much-lov'd ſon is bleſt.

While crowds on this returning morn,
Their willing homage pay,
And ſhouts, of heartfelt gladneſs born,
O'ercome the muſe's lay;
Amid the Pæan's choral ſound,
While dying faction's ſhrieks are drown'd,
O ſovereign, of a people's choice,
Hear, in that people's general voice,
The nobleſt praiſe that waits a throne;
Their ſureſt guard thy patriot zeal—
Thy public care their ſtrength—they feel
Thy happineſs their own.

O royal youth! a king's, a parent's pride,
A nation's future hope!—again the tongue
That join'd the choir, what time by Iſis ſide,
Her tuneful ſons thy birth auſpicious ſung,
Now hails, fulfill'd by Hymen's hallow'd flame,
The warmeſt wiſh affection's voice could frame:
For ſay, can Fame, can Fortune know,
Such genuine raptures to beſtow
As from the ſmiles of wedded love ariſe,
When heavenly virtue beams from bluſhing beauty's eyes?

Ne'er may the rapid hours, that wing
O'er time's unbounded field their ceaſeleſs flight,
To grateful Britain's monarch bring
A tribute of leſs pure delight—
Ne'er may the ſong of duty ſoothe his ear
With ſtrains of weaker joy, or tranſports leſs ſincere,

PROLOGUE to The SECRET TRIBUNAL.

Written by JOHN LITCHFIELD, Eſq.

Spoken by Mr. MACREADY.

LONG hath the Tragic Muſe in ſecret mourn'd
Her power abus'd, her empire overturn'd,
Her ſacred laws in mix'd confuſion toſt,
Her rights inſulted, and her virtues loſt—
Her children, long profeſs'd, diſpute her reign,
Deſerting her's, to hold her ſiſter's train.
'No grief ſublime now ſwell the impaſſion'd breaſt,
'Arrayed in truth's or flowery fiction's veſt;
'No melting tear now ſwims in ſorrow's eye,
'Nor terror ſcreams—nor pity vents the ſigh:
'Time was, when genius ſtruck the plaintive lyre,
'And fancy lent her intellectual fire,
'When poets rais'd the ſympathetic ſtrain,
'And claim'd Compaſſion's tear—nor claim'd in vain.'
The changeling, faſhion, now diſdains to pay
Her ſullen tribute to the ſerious lay,
While cold and impotent our authors move,
And ſcorn to wake—or Pity—Fear—or Love—
By ſecondary means they ſtrive to raiſe
The paltry meed of meretricious praiſe;
With flags, ſpears, helmets, and proceſſions rif',
"Pomp, pride, and circumſtance" of ſcenic ſtrife;
To ſtoried deeds of bold emprize they lead
An army conquer'd—or a nation freed—
Prompters and properties their pow'rs unite,
And drum, fife, trumpet, rouſe the mimic fight—
Hark!—here a charge—the trumpet—there retreat—
A victory here—tattoo—and there defeat.
Thus action, buſtle is—and paſſion, rage,
As bards decree, or mightier chiefs engage;

While, as the fight grows warm, the pit are froze,
The audience fhiver as the actor glows.
'Nor more the verfe has cunning fkill to wind
'The fecret fprings that agitate the mind;
'High rais'd on ftilts, in meafur'd profe, it creeps,
'While judgment fickens, and while fancy fleeps;
'Nor paufe of thought, nor paffion's vivid glow,
'Difturb its ftudied, but unmeaning flow.—
'Monotonous and dull the periods roll,
'Allure the ear, but leave untouch'd the foul.
'Nature, howe'er, is never all the fame,
'In multifarious forms fhe makes her claim—
'Expreffion varies as the paffion turns,
'Softens with love, or with refentment burns.'
This night, a bard, to different views inclin'd,
Demands the tribute of the willing mind,
Happy—if fuch his enterprizing art—
To waken feeling—and to touch—the heart.
What time the policy of German rule
Fetter'd the native freedom of the foul—
When fuperftition held her fanguine ftate,
And dealt, at will, the rapid blow of fate—
The world beheld all pledge of fafety gone,
And even monarchs trembled on their throne.
Judges, with functions unconfin'd and free,
Waited to regifter their dark decree;
The culprit once condemn'd—a num'rous band
Of fecret agents hunt him through the land—
Nor age, nor character, nor kin, have force
To ftay their barb'rous, unrelenting courfe;
Bound by an oath th' avenging fteel to draw,
Guilt became piety—and murder—law.
Britain!—Rejoice!—the envied power is thine,
To punifh malice, and to thwart defign—
Open as day, our courts judicial move,
And rich or poor their equal influence prove;—
Rejoice!—your upright juries make you free,
Bulwarks of Fame—of Life—and Liberty!
To you, our author now fubmits his cauſe,
Unbiafs'd guardians of dramatic laws;
Guilty, or not—there refts at once his all—
For by your verdict—he muft—ftand or fall.

[The lines diftinguifhed by inverted commas were omitted in the delivery.]

A SAILOR's SONG:

From the ROYAL CAPTIVES, 4 vol. by Mrs. YEARSLEY.

MY rum is out, my fpirits die!
My mother gave me all her ſtore;
The tears that left her aged eye,
Fell on the beach I hail no more.

'Jemmy,' ſhe cry'd, 'grey is my hair;
Expect no more my form to ſee!
Thy little ſiſters claim thy care!
Give them the love thou ow'ſt to me.'

And tho' three thouſand miles apart,
And tho' my aged mother ſleep,
My ſiſters ſtill ſhall have my heart,
The world ſhall never make them weep.

Jemmy will come, my ſiſters dear!
Think when the wind blows loud at night,
My latitude may ſtill be fair,
I wiſh my cag of rum was tight*!

SONNET.

[From the SAME.]

AH, Larian! when at early dawn,
The darkling ſhadows flee,
I ſhiv'ring tread the dewy lawn,
And ſigh and think on thee.

I ſee thee in the purling ſtream!
I ſee thee glide away!
I ſee that life is all a dream,
And pleaſures will not ſtay.

My mother cries, 'Dear Aura, ſay,
Why are thy looks ſo pale?'
I dare not own, whilſt thour't away,
My heart will never ail.

The morning ſun is like thine eyes,
'Ere rainy ſhow'rs come on,
And Nature, like thy Aura dies,
The ſun and Larian gone!

* Full.

PROCEEDINGS *of the Fifth* SESSION *of the Seventeenth Parliament of* Great Britain; *continued from Page* 367.

IN the houſe of lords, on Friday, May 8, the duke of Norfolk moved, 'That an humble addreſs be preſented, praying his majeſty to order copies of the correſpondence between the late lord lieutenant of Ireland and his majeſty's miniſters, upon the ſubject of his recal; being at a moment when there appeared to be the moſt general approbation of him in that kingdom, by the munificence of the ſupplies they voted.

Lord Coventry was againſt the motion, becauſe he thought it an undoubted prerogative of the crown to remove any of its ſervants at pleaſure, without aſſigning any reaſons: nor could the enquiry be attended with any good purpoſe, as there was not, as he knew of, the ſmalleſt charge brought againſt the noble earl.

Lord Fitzwilliam contended, that the fact of his being recalled implied a charge againſt him; and he earneſtly implored an inveſtigation of the ſubject, as an act of juſtice.

Lord Mansfield ſupported the obſervations of lord Coventry; adding, that a uſeleſs inveſtigation of the ſubject would lead them into the conſideration of queſtions that were now in agitation in the parliament of Ireland; and he cautioned them againſt the miſchiefs that might ariſe from the appearance of interfering with an independent legiſlature.

Lord Guilford went into a general reply to what had fallen from lord Mansfield; inſiſting that the prerogative had been unfairly twiſted into the queſtion; and had been brought forward as a ſtrong ſhield, behind which they might take ſhelter with ſafety. No one would deny that it did poſſeſs the right to remove the public ſervants without aſſigning any reaſon. Equally undoubted was the prerogative of declaring war, and ſeveral others, which, although the houſe might not have a right to aſk a reaſon for, yet if they were exerciſed to the injury of the people, it was their duty to offer their advice, as being the hereditary and conſtitutional counſellors of his majeſty. Conſidering the circumſtances under which this recal took place, and which were the topics of common converſation, he thought the inveſtigation highly eſſential, that the Iriſh nation might ſee that their diſappointments were not the wiſh of that houſe, but had ariſen from the deceit and duplicity of miniſters, who had endeavoured to make the noble earl their dupe, or from his precipitation in adopting meaſures he was not warranted to carry into effect: the latter, he was convinced, was not the caſe, becauſe the noble earl had fairly come forward, and dared his opponents to the inveſtigation; and if they refuſed to meet him, every man's concluſion might be eaſily made.

Lord Moira ſupported the motion, and inveighed againſt the corruption practiſed in Ireland. 'If,' ſaid he, 'there be corruption in *this* country, it aſſumes ſome modeſty, and aims to conceal its head; but, in *Ireland*, it is ſo bare-faced as to ſtride abroad in open day. His lordſhip was proceeding, when

Lord Romey called him to order.

Lord Moira anſwered, that being animated with a ſubject which he ſtrongly felt, he might have exceeded the bounds of decorum; but he had ſpoken from local knowledge, acquired by a long reſidence in that country. The meaſures of lord Fitzwilliam he highly approved, as juſtice to Ireland, and advantageous to the intereſt of both countries. Their lordſhips had been debating, year after year, on the introduction of French principles: it was to defeat them we had gone into the war, and the deſtruction of them in this country was held out as a ſufficient recompence for all the burdens and inconveniences the public labourted under: he would, therefore, adviſe them not to drive, by oppreſſion, the people of Ireland to the adoption of thoſe principles we had been ſo induſtrious to explode.

Lord Weſtmorland next roſe. 'It had been ſaid,' obſerved his lordſhip, 'that the noble earl had united the great intereſts of the kingdom: why was it? Becauſe he found the friends of government intruſted with all the great landed proteſtant intereſts of the country.' His lordſhip then entered into a panegyric on the virtue and public ſpirit of the Beresfords, the Butlers, and the other families whom earl Fitzwilliam had diſmiſſed, and endeavoured to prove that they were the beſt ſervants, which his majeſty's government could boaſt of in that country; but the moſt material fact which appeared in this ſpeech, was the following, which, indeed, is a clue to the whole of the ſubſequent proceedings of adminiſtration. 'When I arrived in London,' continued his lord-

ſhip, 'as ſoon as convenient, I waited upon Mr. Pitt, and ſtated to him the conſequences that I apprehended would follow from the ſyſtem being carried into effect, upon which, as it appeared to me, the noble earl intended to act; and I did not heſitate to give my opinion with reſpect to the dangers which would follow, if that ſyſtem were carried into full effect.'

Earl Fitzwilliam ſaid, that after what the noble lords had heard, he was not ſurpriſed at his ſudden recal. It ſeemed that the noble lord had returned to England with the full intention to depreciate his adminiſtration, even before he could poſſibly be acquainted with the great outlines of it. It appeared likewiſe, that the miniſter (Mr. Pitt) had given the noble lord a friendly reception, and had liſtened to his repreſentations with pleaſure. This, no doubt, paved the way for the further repreſentations of Mr. Beresford, and was the formation of all the tergiverſations which immediately appeared among the leading members of the Iriſh houſe of commons. After having raiſed a larger ſupply than ever was known, and purſuing his career, in order to complete the emancipation of the Iriſh of all ranks and perſuaſions, he found himſelf, through the influence of a double policy, cut ſhort; and the happy effects which he had promiſed to the nation inſtantly vaniſhed. Let the feelings of that nation, upon ſuch an important occaſion, ſpeak for themſelves. Thoſe feelings were ſpoken in language that could not be reſiſted. It had been ſaid by the noble lord, his immediate predeceſſor, that the Beresfords, &c. were old and faithful ſervants of government. 'Be it ſo; but,' ſaid the noble earl, 'the ſet of men in whom I placed my confidence were ſteady friends to government, at the ſame time that they were tried and determined advocates for the rights and liberties of the people. My country will judge, whether, at this peculiar criſis, it was to be imputed a crime in me to have ſelected ſuch men to ſtrengthen my adminiſtration. Let me begin with that great and revered character, Mr. Grattan. Your lordſhips have been told that the war with France was popular: I utterly deny the fact; but when England was compelled in the war, and could not recede, Mr. Grattan was the great character through whoſe influence all parties were renovated. He did not, for a moment, enter into the contracted view whether the war was juſt or neceſſary, but he boldly ſtood forward, and called upon his countrymen in the following energetic language: 'Our ſiſter nation is fully committed in this war, and we will ſtand or fall with England.' The animating fire flew through all ranks and perſuaſions of Iriſhmen, and England is, and ought to be ſenſible of the vaſt aſſiſtance ſhe received. And is this the reward which the nation is to receive for its zeal and loyalty? Is it to be endured, that a late viceroy is recalled with no other intent than to counteract and fritter away every beneficial meaſure which was intended to be put into execution by the acting viceroy? It ſeems that this was the caſe.'

His lordſhip then aſked whether the Ponſonby family had not ſufficient weight and conſequence in that kingdom to entitle them to the higheſt reſpect; and whether the duke of Leinſter and his friends, who formed a phalanx around good government and the rights of the people, were not equal to the Beresfords? His lordſhip concluded with declaring, that if miniſters reſiſted the motion, he ſhould be more fully convinced than ever, that his diſgrace (if it could be called ſo) was fully intended, even before he took the government of Ireland upon him.

Lord Grenville entered into a very diffuſe argument, to ſhew that the production of the papers called for could not poſſibly afford any ſatisfaction to the houſe, or to the nation.

The earl of Lauderdale immediately followed him, and in the moſt pointed terms ſet forth the tergiverſations of the miniſter in all his tranſactions, from the Eaſt India bill to Nootka Sound; and purſued his conduct to the preſent nefarious buſineſs with earl Fitzwilliam.

The duke of Norfolk recalled the attention of their lordſhips to the queſtion before the houſe, which naturally included theſe propoſitions, viz. If earl Fitzwilliam exceeded his powers, and promiſed thoſe things which he was not authoriſed to do, in that caſe the blame lay upon him. But if, on the contrary, adminiſtration had ſent him out with full powers, which they ſhortly afterward contracted and reſumed, then the blame lay with them, and they were anſwerable to the nation for their conduct. Now, how was it poſſible for the houſe to determine upon this momentous buſineſs, which had very nearly ſet Ireland in a flame, if the official documents and papers were withheld?

The duke of Portland declared, that as there was no ſpecific charge againſt his conduct, or againſt any of the meaſures

which he had taken, he ſhould decline entering into the debate.

Earl Spencer, lord Sydney, lord Carnarvon, and marquis Townſhend likewiſe ſpoke againſt the motion; and lord Lauderdale and the duke of Bedford for it. At the cloſe of the debate, there appeared, contents 25; non contents 98; majority 73.

On Friday, May 15, in the houſe of commons, Mr. Steele brought up the report of the reſolutions of the committee on his majeſty's meſſage, relative to an eſtabliſhment for his royal highneſs the prince of Wales, on which a deſultory converſation took place; in the courſe of which, Mr. Grey ſaid, that no doubt the houſe would be ready to make a liberal proviſion for the paſt, if they ſaw any promiſe with reſpect to the future. But what muſt they think when they found, that the prince, on the eve of his preſent application, had not only exhauſted the additional ſum granted for his eſtabliſhment, but contracted a new debt of 68,000l. He concluded with moving, that inſtead of 65,000l. 40,000l. be inſerted in the reſolution. The amendment was negatived.

Mr. Huſſey then moved an amendment, 'That a ſum be provided, by a ſale of part of the land revenue of the crown, or of the duchy of Cornwall, ſufficient to replace the ſame,' which was alſo negatived.

The original reſolutions were then put and carried, and a bill ordered to be brought in, in purſuance of the ſame.

On Monday, May 18, General M'Leod roſe to make a motion relative to the additional allowance made by his majeſty to the army. After ſtating the general orders iſſued in the name of his royal highneſs field marſhal the duke of York, and counterſigned by the ſecretary at war, declaring his majeſty's intention to make the additional allowance, he contended, that it was the duty of the ſecretary at war to adviſe his royal highneſs of the unconſtitutional principle contained in ſuch a proceeding. He ought to have explained to him, that all ſuch relief, however proper and neceſſary in itſelf, ought to originate in parliament, not with the crown. Inſtead of this, the ſecretary at war forwarded circular letters to the commanders of the different military diſtricts, empowering them to grant theſe allowances to the forces under their reſpective commands, in conſequence of the dearneſs of proviſions. This was a meaſure highly unconſtitutional, calculated to make the ſoldiery look to the crown and not the parliament, for their comfort and ſupport. It was certainly true, that, in one ſenſe, they were his majeſty's army; but virtually, and in reality, they were the army of the nation, inaſmuch as they owed their very exiſtence to the nation; and the king was but the firſt officer in a military, as he was the firſt magiſtrate in a civil view. This was a caſe where both houſes of parliament were equally overlooked; and, if they were not blind to their own intereſts and duties, they would not ſuffer ſuch flagrant abuſe of the executive government. It certainly would not be ſaid that the crown had a power over the purſe of the nation; nor ſhould the executive power, at the time parliament was ſitting, have ordered ſuch an allowance, without ſubmitting it to the wiſdom of both houſes. It would be univerſally admitted, that in a time of ſuch general ſcarcity, ſome allowance of this nature was neceſſary: it was not the meaſure itſelf, but the mode of it, that he condemned. He concluded by moving, that the houſe reſolve itſelf into a committee of the whole houſe, to conſider of the circular orders of his royal highneſs field marſhal the duke of York, relative to certain allowances to be made to the ſoldiers in bread and meat, ſent to the commanders of the different diſtricts from the war-office.

Mr. Courtenay ſeconded the motion. He expreſſed his ſatisfaction that the buſineſs was regularly brought before the houſe, as he conſidered it as a precedent of the moſt alarming nature, whereby the ſoldiery would be taught to look up to the crown, and not to the parliament, for ſupport. He quoted the example of the decline of the Roman empire, in which all the donatives to the ſoldiery came, not from the empire, but the emperor, in order to the overturn of the conſtitution, by teaching them a dependance on the prince.

Mr. Windham ſaid, that the meaſure under diſcuſſion was to be conſidered either in its principle, or its individual propriety in practice. With reſpect to the former, he admitted that the preſent was a departure from the general principle, that the executive ſhould not interfere with the functions of the legiſlative power; but it was to be conſidered whether it was ſuch an interference as ought to create any alarm. Such departures were approved of, by furniſhing the army with bread in kind, as had been practiſed; becauſe, in that caſe, where the value of the bread ſo furniſhed exceeded the ſtoppage for it, by ſo much was their additional pay given by

the crown; and yet nobody ever thought of objecting to it. The ſame conſideration would apply in the preſent caſe, government, in undertaking to ſupply the ſoldiers with meat at 4½d. per pound, might be able ſo to do (and would do ſo in many parts of the kingdom) at that rate, when the ſoldier himſelf could not. With reſpect to the meaſure itſelf, if the principle were not objectionable, he would leave it to the houſe whether there was any thing dangerous in it; and therefore he ſhould oppoſe the motion.

Mr. Fox pointed out what the object for conſideration was, whether, on a pretended urgency of occaſion, and while parliament were actually ſitting, the king ſhould, or ſhould not, augment the pay of the army. With reſpect to the precedent quoted of furniſhing bread in kind, the ſecretary at war muſt ſee the difference between what was merely a regulation, not an increaſe of what was voted by that houſe, and the preſent buſineſs; but even if it did apply, was one bad precedent to ſerve as a juſtification of another?

If additional expence were neceſſary, ought not parliament to be the donor? With reſpect to the precedent of 1792, the addition there was by the crown, a meaſure he ſhould lament the more, if it were to be brought as a juſtification of the preſent. The queſtion, in ſhort, was, not whether the thing was fit to be done, but by whom? Could it be doubted but by the parliament? If that were not ſitting, perhaps the exigency of the occaſion might juſtify the conduct of the crown; but if no ſuch exigency exiſted, then he could not but think that the act was done merely to draw it into a precedent, ruinous in its nature and its conſequences.

Mr. Pitt contended, that, with reſpect to the amount of the augmentation, it would be but trifling, as, by attention in the officers, the price of meat may be kept down. As to applying to parliament, he argued, that would be impoſſible, inaſmuch as no eſtimate could be laid before parliament until next year, when they would have it in their power to approve or diſapprove of the whole. With reſpect to the precedent of 1792, that was a caſe of neceſſity in the firſt inſtance; and afterward the eſtimate was regularly laid before parliament.

General Smith declared the meaſure had filled him with a jealouſy of the unconſtitutional deſign of miniſters, which could not eaſily be eradicated. He was alſo adverſe to any relief being given to men with arms in their hands, and uſing threats, on account of the danger ariſing to the ſtate, ſhould they conceive they could controul the government.

Mr. Pitt explained, that this meaſure had been reſolved on before the late mutinies appeared.

Mr. Martin, general Tarleton, Mr. Grey, and Mr. Francis, ſupported the motion; and Mr. Elte, ſir John Mitford, and ſir Horace Mann, oppoſed it.

Sir William Pulteney moved the previous queſtion; upon which the houſe divided, ayes 22; noes 67; majority 45.

By which the original motion was loſt.

[To be continued.]

AFFAIRS of FRANCE,

Continued from Page 294.

IN the beginning of May, the baron de Stael was introduced to the national convention as ambaſſador extraordinary from the court of Sweden, which has thus fully, as it had long before virtually, acknowledged the French republic.

On the 8th of May, the preſident, three of the judges, the public accuſer, and eleven of the jurors of the late revolutionary tribunal, were found guilty of the moſt atrocious injuſtice and cruelty, during the exiſtence of their functions; ſuch as that of having drawn out liſts of proſcription, of having ordered pregnant women to be executed, and of having tried and condemned, thirty, forty, and even ſixty perſons at a time, *within three hours*. They were all executed, the next morning, in the Place de Greve.

On the 20th of May, enſued a dreadful inſurrection. *See Page* 329. For ſeveral days previouſly to that, hand-bills were poſted up in various parts of Paris, accuſing the convention of withholding bread from the people. Some of the deputies were inſulted in the ſtreets, and attempts were made to excite the troops in Paris to riſe againſt the convention. At length, in the evening of the 19th, the plan of an inſurrection was openly diſtributed in the different ſections.

In conſequence of theſe alarming proceedings, the generale was beat, the next day, at ſeven in the morning, and the

convention aſſembled at their poſts. Nothing now could be more apparent than that general unqualified maxims (ſuch as, that the ſovereignty reſides in the people, and that inſurrection againſt oppreſſion is the firſt duty of a citizen) are incompatible with all good and ſalutary government: for it is impoſſible that the people can delegate the ſovereignty to their repreſentatives, and yet retain it; nor can inſurrection be juſtified by any thing ſhort of the univerſal ſenſe of the nation, not by the caprice or violence of a faction. It is impoſſible to deſcribe the tumultuous ſcenes that enſued. The inſurgents burſt into the hall of the convention itſelf; the galleries were filled with clamour and uproar; Ferrand, one of the convention, was aſſaſſinated, and his head carried about on a pike; almoſt all the members of the convention fled from the ſcenes of horror; and a few only were left, who were known favourers of the jacobins, and who immediately, at the requiſition of the triumphant faction, paſſed ſeveral decrees againſt the moderate party. About five in the afternoon, however, the armed force of Paris arrived, and, after a ſmart, and at one time, dubious conteſt, drove out the inſurgents. The preſident then thanked the brave citizens who had thus ſaved the convention, and, intimating the propriety of their retiring, they immediately withdrew. The decrees extorted during the tumult were then repealed; and the convention proceeded to take into conſideration the meaſures proper to be adopted for the puniſhment of the conſpirators. In the mean time, it was decreed, that the deputies Bourbotte, Duqueſnoy, and Duroi, who had been moſt active in favour of the inſurgents, ſhould be arreſted.

The jacobins, however, were not yet ſubdued. The perſon who had aſſaſſinated Ferrand being taken and condemned to death, was reſcued in his way to execution, by the Sans Culottes of the fauxbourg de St. Antoine. An armed force was ordered to march againſt that ſuburb. A ſevere conflict enſued; the military, at one time, were obliged to retire; but, returning to the charge, the inhabitants of this ſuburb were, at length, compelled to ſurrender up their aſſaſſins, together with their arms and cannon. In a word, the reign of moderation was happily reſtored. A military commiſſion having been inſtituted on purpoſe, many of the leaders of the inſurrection were tried, condemned, and executed.

The plan of the inſurgents was not confined to Paris. An inſurrection broke out at Toulon; and the inſurgents, in great force, marched to attack Marſeilles. They were defeated, however, by the army of the convention, which likewiſe attacked them in Toulon itſelf, and compelled them to ſubmit.

On account of the inſurrections, the convention decreed, that Collot d'Herbois, Bilhaud de Varennes, and Barrere, the members of the convention, who had been ſentenced to be tranſported to Guiana, ſhould be detained, in order to be tried before the military commiſſion in the department of Lower Charente. They were ſuppoſed to be ſtill in the Iſle of Oleron. It appeared, however, that Collet and Bilhaud had ſailed the day before the meſſenger arrived; but Barrere was apprehended, and, it is thought, will ſuffer death.

Nothing very material occurred in the convention till the 9th of June, when Seveſtre, in the name of the committee of general ſafety, made a report of the death of young Capet, the ſon of the late unfortunate Lewis XVI: 'For ſome time,' ſaid he, 'the ſon of Capet was ill of a ſwelling in his right knee, and in his left hand. He loſt his appetite, and a fever ſeized him. The celebrated Deſſault, the ſurgeon, was appointed to ſee and attend him. His probity and his talents were a ſufficient pledge to us that he would neglect none of thoſe duties which humanity demands from us. Nevertheleſs, the diſorder increaſed, and began to aſſume a more ſerious aſpect. On the 16th Prairial, Deſſault died. We immediately appointed the citizen Pelletan, a phyſician of acknowledged ability, and the citizen Demanger, head ſurgeon of the hoſpital of health, to attend the boy.

'The Bulletin of yeſterday, at eleven o'clock, announced very dangerous ſymptoms, and at half paſt two o'clock in the afternoon, we received an account of the death of the ſon of Capet. The committee of general ſafety have directed me to communicate this report to you, and to move, that the proces verbaux, which I hold in my hand, ſhall be depoſited in the national archives.' This was accordingly decreed.

[To be continued.]

THE THEATRE.

ON Tuesday, June 2, was performed, at Covent-garden theatre, a new play, entitled The SECRET TRIBUNAL, the production of Mr. Boaden.

The story is extremely simple; the ambitious relative of a beneficent prince conspires against his life, but his designs being frustrated, he labours to terminate the very party who was the instrument of his sovereign's preservation. This infernal purpose he appears the better able to effect, as he is a member of a Secret Court of Inquiry, modelled after the usage of the old governments. He is, however, from a number of concurring circumstances, a second time completely foiled, and the innocent are made happy.

The principally persecuted objects are two lovers; these, in the hands of Mr. Holman and miss Wallis, were very successfully personated, as was the villanous noble by Mr. Pope. The language is in many instances highly poetical and elegant. It was universally well received.

The Theatre Royal in the Haymarket opened, on Tuesday, June 9, with the performance of a new occasional drama, called NEW HAY at the OLD MARKET, the Mayor of Garrat, and the Battle of Hexham.

The occasional drama is a witty satire on the late projects for enlarging the winter theatres, rendering them unfit for theatrical representations; and inducing a competition, only with the riding-houses of Astley and Hughes.

On Saturday, June 20, was performed, at the same theatre, a new piece, under the title of ZORINSKI. The author is Mr. Morton, to whom the public are indebted for the play of Columbus, and the very interesting little drama of The Children in the Wood.

The characters were, Casimir, king of Poland, Mr. Aickin; Zorinski, Mr. Barrymore; Rodomski, Mr. Bensley; Radzano, Mr. C. Kemble; Zarno, Mr. Bannister, jun. O'Curraugh, Mr. Johnstone; Amalekite, Mr. Suett; Naclo, Mr. Caulfield; Witski, Mr. Faweett; Rosolia, Mrs. Kemble; Rachel, Miss Leake; Winfred, Mrs. Bland.

The story of this piece is chiefly founded upon an incident in the life of the present monarch of Poland; but as the author could not, with propriety, bring a living monarch upon the stage, he has taken the name of Casimir, a former king of the same country, whose character bore a general resemblance, in point of private worth, with that of the unfortunate Stanislaus, whose fate is lamented by mankind at this moment, and whose virtues will be revered to the latest posterity.—In the piece before us, however, Casimir is not the principal character, but Zorinski, who gives the name to the play.

Zorinski, is a degraded noble, of the most ambitious and vindictive character. Having forfeited his honours, he conceals himself in the salt-mines near Cracow, accompanied only by his faithful servant Zarno. Another noble, by name Radzano, had been despoiled of his property by Rodomski, a furious chieftain, and was supposed to be dead. Affairs are in this situation when the piece opens, and Radzano arrives disguised, intending to present a memorial to the king, requiring his restoration to rank and fortune. This memorial Radzano presents to Casimir, and reveals himself. The king recommends pacific measures, alleging the great power of Rodomski, but promising that Radzano shall have justice. Debates run high in the diet, the king advising peace, and Rodomski, with the fury of Moloch, giving his counsel for war. The opposition of the benign monarch to the violent measures recommended by Rodomski, induces the latter to determine on joining in a conspiracy against the king. Before the breaking up of the diet, however, Radzano and Rodomski are opposed to each other, but instead of suffering them to end their difference by the sword, the king, who understands that Radzano is in love with Rosolia, the daughter of Rodomski, advises the latter to consent to an union between the lovers, as the best ground for mutual reconciliation. Rodomski appears to consent, in order to get Radzano more in his power. While Rodomski meditates the destruction of the king, he receives a letter from his confederates, importing, that there was a man concealed in the salt-mines of so determined a character, that he was fit for any desperate enterprize. To him Rodomski repairs, and in the man pointed out to him finds Zorinski, who reveals himself, and at length engages in the conspiracy.

The king is soon dragged from his capital by a band of conspirators, and, after various hardships, is at last left under the guard of Zorinski alone. The

latter ſeveral times raiſes his hand with the intention to kill his ſovereign; but in the end, the affecting eloquence of the monarch prevails, and Zorinſki falls at his feet in an agony of contrition. By the aſſiſtance of Zorinſki, the king is then conducted to a mill, the maſter of which was one of the ſlaves to whom Radzano, on reſuming his poſſeſſions, had given freedom. In this mill the ſuffering monarch obtains refreſhment and repoſe, and being now effectually ſecured from his enemies, he determines to reward Zorinſki, for ſacrificing his miſguided revenge at the ſhrine of loyalty; and the piece concludes with the marriage of Radzano and Roſolia, and of happineſs to all parties.

There are ſome comic ſcenes relative to the miller and his wife; Zarno and his ſweetheart Rachel; Amalekite, a Jew overſeer of the ſlaves; and an Iriſh ſervant of Radzano, which afford an agreeable relief to the impreſſions of the ſerious and terrific events.

The piece was received throughout with very great applauſe.

CONTINENTAL ADVICES.

SPAIN.

Aranjuez, May 6.

THE Spaniſh army in Catalonia encamped on the 23d ult. General Urrutia's head-quarters remained at Gerona.

On the 27th, the enemy made an attack on the poſt of Vaſcara, and were repulſed with loſs. They met with no better ſucceſs in an attempt they made on the ſame day, to force the poſt of Beſalu.—*L. Gaz.*

RUSSIA.

Peterſburg, May 24. The treaty of alliance concluded between Ruſſia and Great Britain, was, on the 11th, ratified here by her Imperial majeſty. Mr. Eaton, the Engliſh ſecretary of legation, who brought the ratification of the ſame treaty on the part of his Britannic majeſty, has been preſented by the empreſs with a gold ſnuff-box, richly ſet with diamonds, and 10,000 roubles, about 2000l. ſterling.

DENMARK.

Copenhagen, June 9. On the 6th inſt. between three and four o'clock in the afternoon, a dreadful fire broke out in the dock-yard of this city, which ſoon communicated acroſs the canal to the houſes in the town, and ſhortly after to one of the principal churches. The fire, driven with violence from theſe different places, continued to rage with great fury for 48 hours, but was at length ſtopped, in conſequence of the houſes immediately in the line of its direction having been pulled down. It is computed that one-fourth part of the city has been conſumed by this calamity, rendered the more dreadful from the circumſtance of the quarter which has been burned having been the moſt populous. Every poſſible attention has been ſhown, on the part of government, for the relief of the ſufferers; and the number of lives loſt is ſuppoſed not to be conſiderable. The royal family was in the country; the prince royal, however, immediately came to town, and paſſed the whole night in the ſtreets, giving orders, and encouraging the firemen and others who were employed, and even affording his perſonal aſſiſtance, at the imminent hazard of his life.—*Lond. Gaz.*

HISTORICAL CHRONICLE.

MAY 29.

JAmes Lyons, who remained on commitment for having forged receipts in the three per cent conſols. to the amount of 1440l. with intent to defraud the governor and co. of the Bank of England, was brought to the bar of the ſeſſions houſe, Old Bailey, for judgment. Mr. juſtice Groſe informed the priſoner, that it was the opinion of the judges, that the crime which he was guilty of was not that ſtated in the indictment, and upon theſe grounds it appeared not ſufficient, nor a good one. The judges were therefore agreed, that judgment ſhould be given againſt the crown. Mr. Lyons addreſſed the court, by ſaying, that he had been diſmiſſed from the bank, and that an action was brought againſt him in the court of king's-bench, and a verdict of 5000l. given, which happened in conſequence of his papers being detained, he therefore begged that the court would order them to be returned. Mr. juſtice Groſe informed him, that he was now before the court of general gaol delivery, and that his application muſt be to the court of king's-bench.—Ordered back into cuſtody.

JUNE 2.

Lewes, May 29. The buſineſs of the ſpecial ſeſſion of oyer and terminer and gaol delivery, holden before Mr. juſtice Buller and Mr. juſtice Lawrence, ended this day. The commiſſions were opened on Wedneſday evening, and the court adjourned until Thurſday morning, when the grand jury was ſworn, and, having found a bill againſt John Sykes and William Sanom, two privates in the Oxfordſhire regiment of militia, for ſtealing flour and other articles to the amount of 300l. and upward, from the premiſes of Meſſ. Barton and Catt, near Newhaven, on the 17th of April laſt, they were put on their trial, and found guilty.

The court then adjourned until this day, when they proceeded to try John Etherington and Henry Brook, two labourers who had joined the ſoldiers, who were both convicted; but their counſel having taken an objection to the indictment in point of law, the caſe was left for the opinion of the twelve judges, and they were ordered to remain in gaol until the next aſſizes.

William Avery and William Midwinter were the two priſoners remaining; and an affidavit being read of the abſence of two material witneſſes againſt them, and that every endeavour had been uſed to procure their attendance without effect, the trial of the priſoners was put off until the next aſſizes.

The court then paſſed ſentence of death on Sykes and Sanom.

Lewes, June 1. Laſt Wedneſday the 83 Oxford militiamen, who were lately tried (for a mutiny at Newhaven) by a general court martial at Brighton, were taken from the houſe of correction in this town, and conducted in two artillery waggons, under a ſtrong guard of the Lancaſhire Fencibles, to Brighton, where two of them are to be ſhot. Three were condemned, but one has been ſince pardoned on condition of being tranſported to Botany Bay. Four were liberated on Friday. Of the remaining ſix, five were to receive 1000, and one 500 laſhes.

JUNE 4.

Tueſday a general court was held at the Eaſt India houſe, to determine by ballot the following queſtion, carried at the laſt court, viz. 'That this court do recommend, that the court of directors ſhould apply to Warren Haſtings, eſq. for a ſtatement of the legal expences incurred by him in making his defence; and that, after having aſcertained the ſame, by a full and ſatisfactory inveſtigation, they do diſcharge the amount thereof, not exceeding the ſum of 71,080l.'

The ballot commenced at eleven o'clock, and continued till ſix in the afternoon, when, on caſting up the votes, the numbers were as follow: For the queſtion 544—Againſt it 244—Majority 300.

And yeſterday a general court was held for determining by ballot the following queſtion: 'That it is the opinion of this court, that in conſideration of the long, faithful, and important ſervices of Warren Haſtings, eſq. and to mark the grateful ſenſe entertained by this company of the extenſive benefits which they have received from thoſe ſervices, a grant of an annuity of 5000l. from the 1ſt of January 1795, to iſſue from the territorial revenues during the term of the company's preſent excluſive trade, to Warren Haſtings, eſq. his executors, adminiſtrators and aſſigns, be prepared by the court of directors, and ſubmitted to the board of commiſſioners for the affairs of India, for their approval and confirmation, purſuant to the act of parliament.'

On caſting up the votes, the numbers were, for the queſtion 508—Againſt it 220—Majority 288.

JUNE 6.

This day, in the court of king's bench, the cauſe of the king *v.* Ramſay and Wilſon, the defendants, who had been convicted for putting a pregnant woman into an open boat at Woolwich, were brought from the king's bench priſon into court to receive judgment. Mr. Mingay, their counſel, ſtated, that they had paid to the pariſh of Clerkenwell, (in the workhouſe of which the woman was brought to-bed,) the ſum of 300l. for the coſts of the proſecution, and the expences of maintaining the pauper's child, which, together with their own coſts, would fix them with an expence of upward of 700l. Mr. juſtice Aſhurſt then pronounced ſentence. He ſaid that the court, taking into conſideration the general good character of the defendants, the money they had already paid, and were liable to pay, and the impriſonment they had ſuffered from the laſt term to the preſent, ordered that they pay a fine to the king of 1s. and be diſcharged.

Lord Kenyon ſaid, he hoped this proſecution would become a warning to all pariſh officers in the kingdom to conduct themſelves with humanity and integrity.

JUNE 15.

Brighthelmſtone, June 13. The two ſoldiers of the Oxfordſhire militia were ſhot this morning, about a quarter paſt eight. One of them knelt down upon one

coffin, and one upon the other, and they both inſtantly fell dead; though, leſt there might be any remains of life, a firelock was let off cloſe to the head of each immediately after. The ſcene was moſt awful and impreſſive. It was in a valley about a mile diſtant from the camp, which all the troops, cavalry, infantry, and artillery, were drawn up in two lines, and after three men out of the ſix who had been ſentenced to be flogged, had received their puniſhment, in a very exemplary manner, the three others were pardoned. The men capitally convicted were then marched up between the two lines of the army, accompanied by a clergyman, and eſcorted by pickets from the different regiments of horſe and foot; and at the upper end of the line, after a ſhort time ſpent with the clergyman, they were ſhot by a party of the Oxfordſhire militia, who had been very active in the late riots, but had been pardoned. The men appeared very reſigned, and the party who had ſhot them were very much affected after. Indeed, ſeveral of the men of the regiment ſeemed greatly agitated and concerned. The awful ceremony was concluded by the marching of all the regiments round the bodies of the ſoldiers as they lay on the ground.

Horſham, June 14. This day Sykes and Sanſom, the two Oxfordſhire militiamen, ſentenced to be hung at the late ſpecial aſſizes at Lewes, for ſtealing flour at Blatchington, were executed here. They appeared penitent, and deſired the ſpectators to take warning by their untimely fate.

JUNE 25.

Saliſbury, June 22. The intenſe cold which ſet in on Thurſday night, there is great reaſon to apprehend, will materially check the progreſs of vegetation; and from the information already come to hand, we fear very much miſchief has been done among the flock juſt ſhorn of the wool, and deprived of that warm clothing which, from the unſeaſonable ſeverity of the weather, was then ſo peculiarly neceſſary. At Broadchalk, near 200 ſheep periſhed, about the half of which were the property of one farmer; and 120 at Downton, 60 of which belonged to Mr. William Mouland; 150 were killed at Steeple Langford, the greater part of which ſuffered from the hail ſtorm; Mr. Huſſel, near Shafteſbury, loſt 300; Mr. Weſtcoat, of Biſhopſdown, loſt 32; Mr. Swayner, of Bulford, 29; Mr. Turner, of Anſty, 40; 60 were loſt in Coombe and its neighbourhood; 100 at Place Farm, Swallowcliff; and a great many at Codford, and on almoſt all the farms around the Plain. In ſhort, it is computed, that one fourth of our flocks are deſtroyed by this ſudden and unexpected calamity.

JUNE 26.

SUMMER CIRCUITS of the JUDGES.

Northern.—Hon. Mr. juſtice Rook, and hon Mr. juſtice Lawrence.

Oxford.—Lord Kenyon, and Mr. baron Thompſon.

Norfolk.—Lord chief juſtice, and Mr. juſtice Aſhhurſt.

Home.—Lord chief baron, and Mr. baron Perryn.

Midland.—Baron Hotham, and Mr. juſtice Buller.

Weſtern.—Mr. juſtice Heath, and Mr. juſtice Groſe.

IRELAND.

Speech of his Excellency, Earl Camden, Lord Lieutenant of Ireland, to both Houſes of Parliament, on Friday, the 5th of June.

My Lords and Gentlemen,

I am directed by his majeſty to convey to you his full approbation of your ſervices in the preſent ſeſſion, and to relieve you from further attendance in parliament. It has afforded me infinite ſatisfaction to obſerve, ſince my arrival in this kingdom, the great temper and wiſdom with which your proceedings have been uniformly conducted.

Gentlemen of the Houſe of Commons,

I am particularly to expreſs his majeſty's acknowledgements for the very liberal ſupplies which you have contributed, for the ſervice of the empire and the defence of the kingdom with ſuch unanimity and cheerfulneſs. The extent of your grants is a convincing proof how warmly you feel yourſelves intereſted in the vigorous proſecution of a war, rendered neceſſary by the wanton and unprovoked attack of France, and involving in it the general cauſe of ſocial order, morality, and religion, in all civilized countries. On my part you may be aſſured they ſhall be faithfully applied to the great purpoſes for which they were granted.

My Lords and Gentlemen,

His majeſty obſerves with the higheſt ſatisfaction, that during the preſent criſis you have not failed to cheriſh and to maintain the various ſources of your internal proſperity. You have alſo completed the intention ſo benevolently entertained of entirely relieving the poorer claſſes from the tax of hearth-money. A wiſe foundation has been laid for educating the Roman catholic clergy. A ſatisfactory arrangement of the treaſury has been confirmed

by law; and an alteration of duties has been introduced, with a view to prevent the immoderate uſe of ſpirituous liquors, and in the hope of introducing a more general habit of ſobriety among the lower orders of the people. In the execution of theſe meaſures you may depend upon my ſincere and earneſt endeavours, to purſue that wiſe and prudent policy by which they were dictated.

On repairing to your reſpective counties, which I cannot too ſtrongly and too earneſtly recommend, it is eſpecially incumbent upon you to make thoſe exertions which the times demand, and to inculcate the neceſſity of an exact ſubmiſſion to the laws. By contraſting the bleſſings which reſult from a well-regulated liberty and peaceable ſubordination, with the miſchiefs which neceſſarily ſpring from licentiouſneſs and anarchy, you will increaſe the attachment of the people to our free and happy conſtitution. To preſerve the conſtitution inviolate is the great object of his majeſty in the preſent conteſt; and he cannot but look to its fortunate iſſue when he reflects on the loyalty, ſpirit, and power of his people, and on their juſt ſenſe of the invaluable inheritance for which they contend.

It will be the conſtant object of my adminiſtration, in which his majeſty's commands, and my perſonal wiſhes are moſt intimately combined, to forward with unremitting vigilance the welfare and the happineſs of this country. Theſe objects I cannot ſo effectually promote as by attending to and acting upon thoſe eſtabliſhed principles which form the connection between Great Britain and Ireland; on which the ſecurity, the freedom, and the proſperity of both kingdoms moſt eſſentially depend.

After which the lord chancellor, by his excellency's command, ſaid,

My Lords and Gentlemen,

It is his excellency the lord lieutenant's pleaſure, that this parliament be prorogued to Tueſday, the 11th of Auguſt next, to be then here holden; and this parliament is accordingly prorogued to Tueſday, the 11th of Auguſt next.

MARRIAGES.

SIR Edward Denny, bart. to miſs Day, daughter of Robert Day, eſq. of Dublin.

John William Clough, eſq. of Norton Conyer, Yorkſhire, to miſs Eliſabeth Broughton, daughter of the rev. ſir Thomas Broughton, bart.

Earl of Winterton, to Mrs. Bodicote, of Weſterham.

Sir Richard Bedingfield, bart. to miſs Jerningham, daughter of ſir William Jerningham, bart.

Captain Grey, of the royal navy, third ſon of ſir Charles Grey, K. B. to miſs Whitbread, youngeſt daughter of Samuel Whitbread, eſq. M. P. of Bedwell Park, Herts.

Crauford Tait, eſq. to miſs Suſan Campbell, daughter of the right hon. Ilay Campbell, lord-preſident of the ſeſſion of Scotland.

John Dalrymple, eſq. of the 3d regiment of guards, eldeſt ſon of the right hon. ſir John Dalrymple, bart. one of the barons of the exchequer in Scotland, to miſs Johnſon, daughter of the Rev. R. A. Johnſon, of Kenilworth, Warwickſhire.

Hon. captain Forteſcue, brother to earl Forteſcue, to lady Ackland, widow of ſir Thomas Ackland, bart.

DEATHS.

SIR Edward Lloyd, bart.

Sir Nicholas Conway Colthurſt, bart.

Hon. Charles Nairne.

Lady Stepney, mother of ſir John Stepney, bart.

Rev. Henry Zouch, vicar of Sandal, Yorkſhire, a very active juſtice of the peace for that county.

Sir Robert Murray Keith, K. B. col. of the 20th regiment of foot, and formerly ambaſſador extraordinary to the court of Vienna.

PREFERMENT.

REV. John Porter, D. D.—Biſhop of Killala and Achonry.

BANKRUPTS. From the GAZETTE.

MAY 26.

JAmes Longman and Francis Fane Broderip, of Cheapſide, muſical inſtrument-makers.

William Vinicombe, of Orchard-ſtreet, St. Mary-le-bone, builder.

John Downs, of Peldon, in Eſſex, ſhopkeeper.

John Milton, of Montacute, in Somerſetſhire, dealer in cattle.

Robert Johnſon, of St. Alban's-ſtreet, Weſtminſter, money-ſcrivener.

Richard Rand, of Great Tey, in Eſſex, miller.

MAY 30.

John Devey, of Wolverhampton, in Staffordſhire, upholder.

Joſeph Simpſon the younger, of Birmingham, and Henry Hatton, of Wal-

bromwich, in Staffordſhire, coal-merchants.

Henry Pool, of Wiſbeach, in Cambridgeſhire, ironmonger.

John Griffin, of Fareham, in Hants, draper.

Joſeph Burr, of Derby-ſtreet, May-fair, horſe-dealer.

William Davies, of Liverpool, ſlater.

Francis Weſt, of Godmanchester, in Huntingdonſhire, horſe-dealer.

John Phillips, of Kenchester, in Herefordſhire, grazier.

JUNE 2.

Thomas Weale, of Hereford, linen-draper.

John Prieſtley, of Halifax, in Yorkſhire, worſted-manufacturer.

Francis Rayder, of Newman-ſtreet, Middleſex, merchant.

Richard Drope Gough, of Souldern, in Oxfordſhire, drover.

John Greenwood and Thomas Cooper, of Manchester, whalebone-cutters.

JUNE 6.

James Read, of Rocheſter, in Kent, money-ſcrivener.

William Dibb the younger, of Otley, in Yorkſhire, dealer.

Joſeph Smither, of Bath, hatter.

Benjamin Boardman, of Norwich, hatter.

James Gowland, of Hutton-in-the-Hole, in Yorkſhire, innholder.

Samuel Parkes, of Oxford-ſtreet, apothecary.

Stephen Diggines, of Doddiſcombeſleigh in Devonſhire, carpenter.

Francis Burgeſs, of Newbury, Berks, ſackmaker.

John Jaques the elder, and John Jaques the younger, of High Holborn, chimney-piece-makers.

Thomas Mills, of Weſterham, Kent, innkeeper.

Simon Thaine, of Kentiſh-town, victualler.

JUNE 9.

William Atkinſon, of Biſhopſgate-ſtreet, linen-draper.

Samuel Bradford, of Sotwell, Berks, upholſterer.

Joanna Curtis, of Briſtol, widow, tavern-keeper.

John Lea, of Bollington, in Cheſhire, tanner.

John Lea, and Samuel Lea, of Bollington, in Cheſhire, tanners.

James Crouch the younger, of Sherborne, in Dorſetſhire, innholder.

John Barratt, of Worſley, in Lancaſhire, fuſtian-manufacturer.

James Wade, of Camberwell, in Surry, coachmaſter.

Griffith Williams, of Tooley-ſtreet, Southwark, cheeſemonger.

JUNE 13.

George Beſt, of Exeter, merchant.

John Roe, of Ombersley, in Worceſterſhire, horſe-dealer.

William Wilkinſon, and Richard Jordan, of Rotherhith, Surry, builders.

John Gurney, of St. Philip and Jacob, in Glouceſterſhire, dealer.

Eleanor Randell, of Stourport, in Worceſterſhire, barge-owner.

JUNE 16.

Abraham Perkins, of Birmingham, varniſh-maker.

Thomas Dudley, of Tamworth, in Staffordſhire, baker.

Robert Cotes, of Dormington, in Herefordſhire, grazier.

John Bayley, of Manchester, plumber.

George Gill the younger, of Horbury, in Yorkſhire, grocer.

Edward Lloyd, of Manchester, plumber.

Henry Croaſdell, of Cecil-ſtreet, Strand, taylor.

William Badley, of Upper Cleveland-ſtreet, Fitzroy-ſquare, bookſeller.

William Bidwill, of Great Surry-ſtreet, Black-friars-road, Surry, laceman.

JUNE 20.

Edward Smith, of Birmingham, hat-manufacturer.

Frederick Hallett, of Bath, cheeſemonger.

Thomas Drew, of Charlotte-ſtreet, Portland-place, Mary-le-bone, ſurveyor.

Richard Matthews, of Llanidloes, in Montgomeryſhire, ſhopkeeper.

James Daniel, of Stockport, Cheſhire, hat-manufacturer.

William Gerrard, of Frome Selwood, in Somerſetſhire, ſtone-cutter.

John Peake, of Turnmill-ſtreet, St. James, Clerkenwell, pawnbroker.

JUNE 23.

Alexander Cumming, of Rotherhithe, in Surry, hatter.

William Burrows, of Lincoln, mercer.

Thomas Underwood, of Caſtle-ſtreet, Leiceſter-fields, victualler.

Francis Hazall, of Sydenham-common, in Kent, victualler.

John Nelſon, of Manchester, ſcrivener.

James Bartlett, of Frome Selwood, in Somerſetſhire, clothier.

Thomas Whitehead, of Loadhill, in Yorkſhire, clothier.

William Surgery, of St. Martin's-court, Weſtminſter, hoſier.

NEW PUBLICATIONS.

AIKIN's Hiſtory of Mancheſter and its Environs, large 4to. 3l. 8s.

Norgate's Eſſays, Tales, and Poems, 8vo. 5s.

Traditions, a Legendary Tale, 2 vol. 12mo. 8s.

Tocquot's French Dictionary, ſmall 12mo. 5s.

Huntingford's Twelve Diſcourſes, 8vo. 6s.

Account of the Collegiate Chapel of St. Stephen, Weſtminſter, with Plans, &c. 2l. 2s. in ſheets.

Lyſons' Environs of London, vol. 2, 3, 3l. 3s. boards.

Maſon's Eſſays on Engliſh Church Muſic, 3s. 6d. ſewed.

Bank Note, a Comedy, 2s.

Iriſh Mimick, a Farce, 1s.

Bromley's Hiſtory of the Fine Arts, vol. 2, 1l. 1s. boards.

Anecdotes of diſtinguiſhed Perſonages, vol. 3, 7s. boards.

Plaw's Rural Improvements, for Parks, Plantations, &c. 4to. 1l. 11s. 6d. boards.

Philoſophical Sketches on the Principles of Society and Government, 4s. boards.

Banks' Treatiſe on Mills, 8vo. 6s.

Chriſtian Knowledge, in a Series of Extracts, 8vo. 7s.

Malkin's Eſſays on Subjects connected with Civilization, 8vo. 4s. boards.

Annual Regiſter for 1791, 8s. half-bound.

Rumington on Ejectment, large 8vo. 16s.

Robert and Adèla, 3 vol. 12mo. 10s. 6d.

Davies on the Caſe of Labourers in Huſbandry, 4to. 10s. 6d. boards.

Sydney's Hiſtory of Cataline's Conſpiracy, 8vo. 6s.

Plowden's Church and State, 4to. 1l. 4s.

Chevalier's Pretended Tomb of Homer, 4to. 4s. ſewed.

Mercier's Sermons ſur les Circonſtances preſentes, 8vo. 3s. 6d. ſewed.

Secret Tribunal, a Play, 2s.

Smith's Attempt to render the Pronunciation of Engliſh more eaſy to Foreigners, 8vo. 7s.

Lavater's Confeſſions and Familiar Letters, 2 vol. ſmall 8vo. 12s.

Montalbert, a Novel, 3 vol. 12mo. 13s. 6d.

Murphy's Travels in Portugal, large 4to. 1l. 11s. 6d.

AVERAGE PRICES of CORN.

June 13, 1795.

By the Standard Wincheſter Quarter of Eight Buſhels.

INLAND COUNTIES.

	Wheat.		Rye.		Barley.		Oats.	
	s.	d.	s.	d.	s.	d.	s.	d.
Middleſex	71	4	35	11	39	4	28	3
Surry	70	8	42	0	40	0	28	10
Hertford	67	6	——		37	6	26	5
Bedford	64	11	——		35	9	26	5
Huntingdon	62	9	——		35	0	23	2
Northampton	64	8	43	0	35	8	25	9
Rutland	68	0	——		32	0	24	0
Leiceſter	67	10	——		39	1	25	11
Nottingham	74	10	48	8	39	6	27	0
Derby	75	4	——		41	9	28	8
Stafford	72	6	——		41	8	27	3
Salop	71	6	56	0	43	11	32	0
Hereford	68	3	46	4	40	4	30	9
Worceſter	70	5	——		42	5	31	8
Warwick	74	4	——		45	4	31	5
Wilts	60	2	——		37	8	27	6
Berks	68	4	——		37	0	30	1
Oxford	64	0	——		37	4	26	8
Bucks	67	10	——		36	8	28	0
Brecon	70	4	——		——		28	1
Montgomery	75	1	64	0	44	10	24	0
Radnor	70	8	——		35	4	28	7

MARITIME COUNTIES.

Eſſex	70	10	36	6	37	0	29	8
Kent	65	0	——		35	1	27	5
Suſſex	64	6	——		30	0	28	6
Suffolk	68	4	44	0	36	11	27	6
Cambridge	63	1	44	4	33	9	22	3
Norfolk	63	10	——		33	6	22	8
Lincoln	64	9	49	8	36	4	22	1
York	65	10	60	0	34	3	24	5
Durham	69	3	——		33	3	25	0
Northumberland	59	6	42	11	32	9	22	3
Cumberland	73	3	65	0	34	5	24	2
Weſtmorland	76	0	57	0	37	8	25	4
Lancaſter	79	0	——		37	9	25	7
Cheſter	73	4	——		——		27	10
Flint	80	0	——		44	9	——	
Denbigh	77	6	——		48	0	24	10
Angleſea	——		——		40	0	20	0
Carnarvon	70	8	52	0	48	8	20	8
Merioneth	75	11	56	1	48	0	25	10
Cardigan	63	3	——		41	6	16	0
Pembroke	57	0	——		40	1	——	
Carmarthen	62	0	——		42	0	16	0
Glamorgan	64	0	——		38	9	24	0
Glouceſter	67	10	——		38	1	28	10
Somerſet	64	9	——		41	9	21	10
Monmouth	67	8	——		——		——	
Devon	77	2	——		36	4	29	2
Cornwall	68	3	——		36	10	25	10
Dorſet	63	11	——		——		28	0
Hants	64	11	——		37	5	26	0

Peck Loaf, 3d. 5d.

PRICES of STOCKS, from MAY 28, to JUNE 26, 1795, both inclusive.

By ANTHONY CLARKE, Stock-Broker, No. 15, Sweeting's-Alley, Cornhill.

Days	Bank Stock.	3 per C. reduced.	3 per C. conſols.	4 per C. conſols.	5 per C. conſols.	Long Ans.	Short Ans.	India Stock.	India Bonds.	South Sea Stock.	Old Ann.	New Ann.	Navy Bills.	Engliſh Lot. Tic.
28	160 ¼	65 ¾	65 ⅛ a ¼	79 ⅛	97 ½	18 ¼	8 ⅞	192 ½					3 ½ dif.	
29	162 ½		65 ¼ a ⅜	79 ¼	97 ⅝				21. dif.				3	
30	163	66 ⅛	66 ⅛ a ¼	79 ⅜	97 ¾	18 ⅛	8 ⅞	195 ½	2				3 ⅛	
1	164 ¼	66 ¼	66 ¼ a ⅜	79 ⅜	97 ¾	18 ⅛	8 ½	195	2		66 ⅛		2 ⅞	
2	164 ⅜	66 ¼	66 ¼ a ⅜	79 ⅜	shut.	18 ⅛		195 ¼	2	shut.			3	
3	165	66 ¼	66 ¼ a ½	79 ⅝		18 ⅛	8 ¼	shut.	1			shut.	3	
4			shut.											
5	168	67 ⅛	66 ⅝ a 67 ⅛	80 ⅛		18 ⅛	8 ¼	197	1				3	
6	168 ¼	68 ¼	67 ⅛ a 67 ⅜	81 ⅜		18 ⅛	8 ¼	200	1				3	
8	168 ¼	67 ⅜	67 ⅛ a ¼	81 ⅜		18 ⅛	8 ¼	199	1				3	
9	167 ¼	68	67 ⅛ a 66 ½	81 ⅛		18 ¼	8 ¼	198	1				3	
10	166	67 ⅜	66 ⅝ a ¾	80 ⅛		18 ⅛	8 ¼	198	1				3	
11	165 ¾		67 a 66 ⅝	80 ⅛		18 ⅛		198 ¼					3	
12	165 ⅜	67 ⅛	66 ⅝ a ¾	80 ¼		18 ⅛	8 ⅛	199 ¼	1		66 ⅞		3 ⅛	
13		67 ¼	66 ⅝ a 67 ⅛	80 ⅛		18 ⅛	8 ⅛	199 ¼					3 ⅛	
15	166 ¼	67 ⅛	67 ⅛ a ¼	81 ⅛		18 ⅛	8 ⅛	200 ¼	2				3 ⅛	
26	166	67 ¼	67 ¼ a ½	81 ¼		18 ⅛	8 ⅛	200 ¼	2				3 ⅛	
27		67 ¼	67 ⅛ a ⅜	81		18 ⅛	8 ⅛	199 ½	2				3 ⅛	
28	165	67 ¼	67 ⅛ a 67	80 ¾	98 ⅛	18 ⅛		199					3 ⅛	
29	164 ¾	67 ⅜	67 ¼	80 ⅜		18 ⅛	8 ⅛	199					3 ⅛	
30	164 ¼	67 ⅜	67 ⅛ a ¼	80 ¼	98 ½	18 ⅛	8 ⅛	199	2				3 ⅛	
32	164 ¼	67 ⅜	67 ⅛ a ¼	80 ¼		18 ⅛	8 ⅛	199 ¼	2				3 ⅛	
33	164 ¼	67 ¼	67 ⅛ a ¼	80 ¼		18 ⅛	8 ⅛	199 ¼					3 ⅛	
34		67 ¼	67 ⅛ a ¼	80					4				3 ⅛	
35		67 ¼	67 ⅛ a ¼	80 ⅛		18 ⅛	8 ⅛	198 ¼	4				3 ⅛	
36	163	67 ⅛	67 ⅛ a ⅜	80 ⅛		18 ¼	8 ⅛		6				3 ⅛	

☞ In the 3 per Cent. conſols. the higheſt and loweſt Price of each Day is given; in every other Article the higheſt Price only, the Long and Short Annuities excepted, which are given within a ſixteenth of the higheſt Price. In the different Funds that are ſhut, the Prices are given with the Dividend till the Days of Opening.

THE

INDEX

TO THE

NINETY-SIXTH VOLUME.

A.

AAR, River, its Scenery compared with that of the Rhine 238
Aarburg, a Town of Switzerland, described 273
Abbot, Archbishop, his Character 177
Accident, fatal 145, 147
Adlersberg, wonderful Caverns at and near 261, 262
Adulation, Servile 39
Agriculture, Report of the Board of, for March 275—for April 347—for May 431
Ainsworth, Henry, Account of 178
Air. Remarks on the State of the, in January 127—for February 197—for March 275—for April 347—for May 431
Akenside, Dr. his Character as a Poet 186
Alexander the Great, a new Pantomime 137
Allegory, by Prodicus 5
Almanza, Battle of 342
American Buffalo. *See* Buffalo.
Ames, Dr. William, Account of 178
Anderson, Mr. Extract from his Account of Lord Macartney's Embassy to China 276, 323
Andrews, Mr. Extracts from his History of England 353
Andrews, Bishop, his Character 177
Anecdote, a Medical 36, 397—of James II, 103—of the Siege of Paris 110—of Richard I, 110—an Indian 120—Peruvian 125—of Painting 184, 340, 397—Chinese 236—of Lord Ashburton 257—of Mr. Sharpe, the Surgeon 257—of Dr. Johnson 257—of Carlini 258—of the Turf 258—of a Chinese Emperor 326—of Queen Mary 331—of Queen Anne 332—of George I, 333—of the Earl of Peterborough 333—of Lord Bottetourt 333—of George II, 334—of Luther 343—of Sapor, King of Persia 352—of Parental Affection and Filial Piety 416—a Military 422—of the Prince of Neuwied 424
Anecdotes of Military Ecclesiastics 110—Miscellaneous 256, 397—of the Empress Catharine II, 272—of distinguished Persons 331—of the Battle of Almanza 342—of the Government of England and Scotland 353
Animals, on Cruelty to 189
Anne, Queen, Anecdotes of 332
Ants, how to destroy 197
Apathy, Ode to 52
Aristocracy, Power of the, weakened by Henry VII, 356
Arles, Archbishop, his Heroism under the Hands of an Assassin 391
Arminianism, Progress of, in England 174
Artists, on the Connexion between their Genius and their Lives 419
Ashburton, Lord, Anecdote of 257
Attachment, Motives to 110
Auctioneers, the language of, satirized 256
Augst, in Switzerland, Account of 240

B.

Babington, Dr. Account of 178
Bacharach, Account of 422
Bad Connexions, permanent Attractions of 111
Baden Durloch, Character of the Margrave of 341
Ballad, by Mrs. Moody 205
Bancroft, Archbishop, Character of 177
Barbauld, Mrs. her Character of Dr. Akenside 185
Barometer, greatest, least, and mean State of, in 1794, 33
Basil, in Switzerland, Account of 239
Beak, Anthony, Bishop of Durham, his military Character 110
Beattie, Mr. his Dialogues of the Dead, 93, 169, 247—his humorous Theory of a Preposition 335
Beattie, his Character, by Dr. Beattie 400
Beaumelle, M. his Saying of Kings 333
Beauvais, Bishop of, his military Exploits 110

THE INDEX.

Bendorf, Account of 424
Benevolences, when firſt exacted 356
Berwick, Duke of, his Death and Character 341
Bible, Hiſtory of the Engliſh Tranſlations of the 9—Wickliffe the firſt Tranſlator of the whole 10—Great Character of Tindall's Tranſlation 10—Cranmer's, or Coverdale's, the firſt allowed by royal Authority 11—Other vernacular Verſions 12—alarming Apprehenſions of the ill Effects that might reſult from rendering the Bible intelligible to the People 15—the Biſhop's Bible 83—Popiſh Verſions 85—the preſent authoritative Tranſlation 83—Queſtion concerning a new Tranſlation or a Reviſion of the old one 86
Bills of Attainder, Proſecutions by, when firſt adopted 356
Bingen, Account of 345
Bingerloch, Picturesque Scenery at 421
Birds, curious Particulars in the Natural Hiſtory 407
Blackwall, Account of the noble Shipyard and Wet Dock at 385
Bolton, Robert, Account of 178
Bonn, Account of 425
Books, Thoughts on 47
Boppart, Account of 423
Boſwell, Mr. James, his Character by himſelf 399
Boltetourt, Lord, Anecdote of 333
Bouvart, M. Anecdote of 397
Boyne Man of War, deſtroyed by Fire 376
Bramah, Mr. his new-invented Watercock 121
Brightman, Thomas, Account of 178
Briſach, Old and New, Account of 243
Brothers, Richard, apprehended for writing fantaſtical Propheeies 226
Broughton, Hugh, his Character 177
Browne, Mr. Account of his Evaporator 185
Bruce Caſtle, Account of 233
Brunſwick, Account of the Family of 41
Buffalo of America ſuperior to the Engliſh Ox 123—his uſeful Properties 124
Builders, Caution to 36

C.

Calamy, Dr. his Advice to Government concerning the French Prophets 236
Camp, Deſcription of a, by an Auctioneer 256
Canara, Particulars of the Inhabitants of 265
Canzonet 208
Carew, Bampfylde Moore, Account of 313
Carſtan, George, his Character 177
Carliſruhe, Deſcription of 340
Carlini, Anecdote of 258
Carniola, wonderful natural Curioſities in 260
Caroline, Princeſs of Brunſwick, her Voyage to, and Arrival in England 294—and Marriage with the Prince of Wales 296. *See* Brunſwick
Caterpillars, how to deſtroy 197—Verſes on a 206
Catharine II, Empreſs of Ruſſia, Anecdotes of 272
Cavern, Deſcription of a wonderful 261, 262
Celibacy, Thoughts on 327
Character of Lewis XVI, when Dauphin 271—of Maria Antoinette, when Dauphineſs 271—of the Margrave of Baden Durloch 341—of Sir William Jones 348—of Eraſmus by himſelf 399—of James Boſwell, Eſq. by himſelf 399—of Mr. Beattie 400
Characters, ſmall Proportion of eminent 329
Charles le Gros, King of France, his deplorable Fate 164
Chelſea, Inſtitution of a College at 86
China, Particulars of the Britiſh Embaſſy to 276
Chineſe, their Idea of their own Country 96—Confutation of ſeveral Particulars in Abbé Groſier's Account of the 323
Chriſtall, Miſs, Extract from her Poetical Sketches 283
Chriſtianity, on the Spirit of 98—little underſtood in the dark Ages 110, 344
Cinnabar, what 263
Circuits for the Summer Aſſizes 453
Cirknitz, Lake of, extraordinary Account of 260
Clergy, their Share in the Legiſlature, in ancient Times 353
Cliefden Houſe, deſtroyed by Fire 379
Cobra de Capello, a Serpent, Account of 267—Cure for its Bite 268
Coblentz, Picturesque Situation of 424
Cochineal, not a Stranger to the northern Continent of America 124
Cogan, Dr. his Account of the Rhine, Character of 344
Collectors, Remarks on 398
Cologne, Account of 426
Colymbus. *See* Great Speckled Diver 409
Commines, Philip de, his Character of the Engliſh Government 355
Commons, Members of the Houſe of, their daily Pay in the 15th Century 353
Complaint, on the Propenſity to 395
Conſtance, City and Lake of, deſcribed 163
Convocations. *See* Clergy

THE INDEX.

Copenhagen, Fire at 450
Corfica, Speech of the Viceroy, to the Parliament of 360
Coxe, Mr. Extract from his View of the United States of America 198
Cranmer's, or Coverdale's Bible, the firſt allowed by royal Authority 11
Cromwell, Sir Thomas, his arbitrary Conduct 357
Crotcher Lodge, a new Farce 137—Prologue to 282
Culloden Man of War, Men executed for Mutiny on Board the 75
Cuttle Fiſh, Account of the 320

D.

Delaval, Lord, his Seat plundered by French Privateers 226
Deptford, Powder Mills at, blown up 74
Deſerted Daughter, a new Comedy 368—Prologue and Epilogue to 370
Dialogue, ſuppoſed, between Lewis XIV and a Courtier 390
Dialogue of the Dead, between Addiſon and Johnſon 92—between Swift, Mercury, and a Bookſeller 169—between Mercury, Socrates, and a modern Philoſopher 247
Diſeases, Obſervations on, in December 1794, 33—in January 127—in February 197—in March 275—in April 347—in May 431
Donald, Lord of the Iſles, his Cruelty 355
Donne, Dr. John, his Character as a Divine 177
Dort, Account of the Synod of 88
Downie, David, pardoned 309
Duel 225
Duſſeldorf, Account of 426

E.

Eaſt India Houſe, Proceedings at the 228, 451
Eaſt Indies, Advices from the 74
Eccleſiaſtics, military, once not uncommon 110
Ehrenbreitſtein, Account of the Caſtle of 424
Ehrenfels, Account of the Caſtle of 421
Elegy 370
Elfeld, Account of 345
Elliot, Sir Gilbert, his Speech to the Parliament of Corſica 360
England Preſerved, a new Play 137
England, Anecdotes of the Government of 353
Engraving, on the Art of, by Sir Robert Strange 40
Epilogue to The Wheel of Fortune 295—to The Deſerted Daughter 371
Eraſmus, his excellent Character 239—his Character by himſelf 399
Eſpec, Walter, Account of 81
Evaporator, Account of a 185
Execution at Newgate 378—at Brighton 451—at Horſham 452
Experience, Benefits derived from 109

F.

Fallen Grandeur, Reflections on 254
Falſtaff, Obſervations on Shakſpeare's Character of 114
Fame, the Love of, its Univerſality 43
Faſhions, on the Change of 257
Fatio, Nicolas, Account of 234
Fern Owl, falſely ſuppoſed to be injurious to Calves 410
Fielding, Mr. Obſervations on his Tom Jones 405—and Jonathan Wild 415
Fire, at Liverpool 76—at Manchester 144—at Philadelphia 147—at Spithead 376 at Cliefden Houſe 379—at Copenhagen 450
Firſt Love, a new Comedy 369
France, Progreſs of the War againſt: Rapid Succeſſes of the French in Holland 70, 71, 140, 209, 218, 220, 221—Ships taken from the French 70, 139, 143, 219, 304, 306, 373, 375—Ships taken by the French 139, 228, 373—Victories in Spain 138—Capture of St. Fernando de Figueras and Roſes 138—Guadaloupe evacuated by the Engliſh 139—Inſtructions for the Seizure of Dutch Veſſels 148—Tiburoon retaken by the French 221—Victory obtained by admiral Hotham, in the Mediterranean 304—the French driven from the Port of Mombach, near Mentz 375—and the Hardenberg 376—the French checked at Vaſcara and Beſalu 450
France, Reflections on the Progreſs of the Revolution in 3, 389—Execution of Carrier 138—La Vendee and the Chouans 138—Cruel Decrees repealed 139—Accuſation of Collet d'Herbois, Billaud de Varennes, and Barrere 139 Anniverſary of the King's Death 139—Obſervations in the Convention on the Superiority of the Engliſh at Sea 222—Peace with Tuſcany 291—Decree reſpecting religious Worſhip 292—Decree reſpecting the Power of negotiating with foreign States 293—Tumults in Paris 293—Collet d'Herbois, Billaud de Varennes, and Barrere baniſhed to Guiana 293—Peace with Pruſſia 293, 438—Inſurrection at Paris 379, 447—Treaty of Alliance with Holland 440—Execution of the Judges and Jurors of the late

Revolutionary Tribunal 447—Death of young Capet, Son of Lewis XVI 448
Francis II, Emperor, his Reſcript to the States of Germany 433—Convention between, and his Britannic Majeſty 438
Frankendahl, Account of 343
Frederic William II, King of Pruſſia, his Addreſs to the States of the Empire 433—Peace between, and France 293, 438
French Prophets. *See* Prophets
Friendſhip, on the Errors of 16
Friends of the People, Society of, ſuſpend their Proceedings 75
Futurity, Curioſity reſpecting, cenſured 108

G.

Gahagan, Uſher, remarkable Account of 96
Galway, Earl of, Anecdote of 342
Gedde's, Dr. his Character of Tindall's Tranſlation of the Bible 11
George I, Anecdotes of 333
George II, Anecdotes of 334
Germany, Origin of the petty States in 240—Interſections of Territory in 423
Geſſner and Theocritus, Compariſon between 405
Gleanings 96
Goar, St. Reflections on the Views from 422
Gollin, Biſhop of Paris, a valiant Prelate 110
Gothic Architecture, Reflections on 244
Great Britain, Hiſtory of Knowledge in, during the Reign of James I, 8, 82, 174 *See* Nobility. Treaty of Alliance concluded between Ruſſia and 450
Great Speckled Diver, or Loon, its admirable Conformation 409
Groſier, M. Errors in his Account of China 323
Guinea Worm, Account of the 269

H.

Haguenau, Account of 340
Hair Powder Tax, Commencement and Particulars of the 377
Hale, Sir Matthew, his Account of the Lawyers of the 15th Century 354
Hampton Court, Conference at 9
Haſtings, Warren, Eſq. Concluſion of his Trial 307—Expence of Trial defrayed by the Eaſt India Company 451—Annuity of 5000l. allowed to, by the Company 451
Henry IV, his Compunction on his Death Bed 112
Henry V, Obſervations on Shakſpeare's Character of 38, 113, 114
Henry VII, his ruling Paſſion 97—weakens the Power of the Nobility 356—his Conduct toward Ireland 356—erects the Court of Star-chamber, &c. 356
Henry VIII, completely Maſter of his Parliaments 356
Hercules, the Choice of, an Allegory 5
Hermit Crab, curious Account of the 322
Higgins, William, diſcharged from Priſon 377
High Conſtable, his deſpotic Power, in former Times 354
Holland, Embargo laid on the Ships of, in England 76—Inſtructions to ſeize the Ships of 148—Conqueſt of by the French 209
Honeſt, it is not wiſe to be too 155
Hops, Duty on, in 1794, 228
Hotham, Admiral, his Victory over the French 304
Houſe of Commons, daily Pay of the Members of, in the 15th Century 353
Human Enjoyments, Imperfection of 112
Hygrometer, greateſt, leaſt, and mean State of, in 1794, 33

I.

Jack of Newbury, a new Opera 368
Jackſon. Rev. William, his Trial for High Treaſon 373—his ſudden Death 572
James I, groſs Flattery offered to 9—his Perſecution of Conrad Vorſtius and of Bartholomew Legate 87
James II, Particulars of his Eſcape 103
Idleneſs, Miſcellaneous Thoughts on 89
Idria, celebrated Quickſilver Mines at 262
Invitations, Eſſay on 264
Inundations, vaſt Damages by 148, 227
Jones, Sir William, Character of 348
Johnſon, Dr. his Obſervations on the dramatic Character of Henry V, 38, 114—Letter from, on the Death of his Wife 253—Anecdote of 257—his Thoughts on the Education of Women 332
Ireland, Speech of the Lord Lieutenant, Earl Fitzwilliam 134—The Lord Lieutenant recalled 228—Letter from, concerning his Recal 285—Bill to enable the Roman Catholics to ſit in Parliament, &c. rejected 379—Speech of Earl Camden 453
Irreſolution, poetical Picture of 107
Iriſh Mimic, or Blunders of Brighton, a new Farce 367
Iſdwell, Iſdwell, remarkable Affair of 308, 309
Iſle of Dogs, Account of 386
Juries, formerly noted for their Perjuries 358

THE INDEX.

K.

Kaub, Account of 422
King's Bench, Court of, Proceedings at the 451, 452
King Henry IV, Part II, Obſervations on 34, 207
Kings, M. Beaumell's ſaying of 333
Kirkham Abbey, Account of 81
Knights of the Shire, ancient Qualification for 353
Knox, Dr. his Obſervations on the Character of Henry V, 39

L.

Lacy, John, a pretended Prophet 234
Lambeth Articles, Account of the 8
Land Rail, Account of the 408
Lauffen, celebrated Cataract at 165
Lauffenburg, Cataract and beautiful Scenery at 238
Lawſuit, againſt an unjuſt Deity, a Chineſe Anecdote 236
Legate, Bartholomew, burnt as a Heretic 87
Le Maitre, John Peter, diſcharged from Priſon 377
Lewis XIV, Cruel Policy of 342, 343, 422—ſuppoſed Dialogue between, and a Courtier 390
Lewis XVI, Character of, before his Acceſſion to the Throne 271
Life's Vagaries, a new Comedy 214—Prologue to 283
Limpet, a Shell-fiſh, Account of the 322
Little Things, on Attention to 46
Liverpool, Fire at 76
Llangunner, Account of 432
London, Proceedings of the Common Council of 75, 144—of the Common Hall 77—their Petition to the Houſe of Commons 131—Addreſs of the City to his Majeſty on the Subject of the War 144—Election of a Repreſentative of 227—Addreſſes of, on the Marriage of the Prince of Wales 297
Longinus, his Death 31
Lottery for 1795, 228
Lotteries, Reflections on 258
Lowitz, Mr. his Memoir on the Purification of corrupted Water 22
Luhrley, Echo of 422
Luther, Anecdote of 343

M.

Magnanimity, Traits of 31
Maintenance, prevalent in the 15th Century 354
Manchester, Fire at 144
Manheim, Deſcription of 342
Manners, Ancient, Illuſtrations of 28
Maria Antoinette, Queen of France, Character of, when Dauphineſs 272
Martin, Mr. diſcharged 75
Mary, Queen, Anecdotes of 358
Mede, Joſeph, his Character 277
Memoirs of Sir Hans Sloane 253
Mentz, Account of 344
Merton Abbey, Reflections on 164
Meteorological Journal for December 32—for January 126—for February 196—for March 274—for April 346—for May 430
Mexico, Conſpiracy diſcovered in 139
Minas, Marquis de las, Anecdote of 342
Mole Cricket, Natural Hiſtory of the 319
Molloy, Captain, his Trial 378
Moore, Dr. Extracts from his View of the Cauſes and Progreſs of the French Revolution 386, 389
Morgan, Mrs. Extract from her Tour to Milford Haven 432
Morocco, Emperor of, declares War againſt the Americans 228
Mulheim, Account of 426
Munich, Marſhal, his noble Anſwer to Catharine II, 272
Murder, at Grays in Eſſex 378
Muſcle, a Shell fiſh, not poiſonous 321
Mutiny, at Edinburgh 145
Myſteries of the Caſtle, a new Dramatic Tale 136

N.

Natural Hiſtory of the Viper 318—of the Mole Cricket 319—of the Porpeſſe 319—of the Cuttle Fiſh 320—of the Sand Eel 321—of the Razor, a Shell-fiſh 321—of the Muſcle and Pea Crab 321—of the Limpet 322—of the Hermit Crab 322—of various Birds 407
Neceſſity, ſingular Ingenuity of 125
Neuwied, Account of 424
New Year, Ode to the 49
Nobility, Britiſh and Iriſh, and the late Nobleſſe of France, Compariſon between 386

O.

Oberlahnſtein, Account of 423
Oberweſel, Account of 422
Ode to the New Year 49—to Apathy 52 to the Nymph of the Fountain of Tears 51—for his Majeſty's Birth-Day 442
Old Bailey, Proceedings at the 145, 148, 225, 309, 310, 378, 379, 450
Orange, Prince of, arrives in England, with his Family 76—Circumſtances attending his quitting Holland 213

THE INDEX.

P.

Palatinate of the Rhine, Cruelty of Lewis XIV in the 343
Parental Anxiety, fine Picture of 110
Paris, Siege of, in the ninth Century 110
Parliament, Proceedings of, on the King's Speech 58, 62—on the Suſpenſion of the Habeas Corpus Act 60, 127, 130, 235—on the Office of third Secretary of State 61—on a Motion againſt Interference with the internal Government of France 127—on the ſuperior Conſtruction of the French Navy 128—on the Conduct of the Earl of Chatham 228—on the Army Eſtimates 128, 130—on a Petition from Carliſle 129—Petition from the Livery of London 131—on a Motion reſpecting a Negociation with the French 131, 215, 216—Counter Petition of ſome Liverymen of London 133—on the Manning of the Navy 133—Royal Meſſage concerning the Imperial Loan 214—Debates thereon 215, 216—on the Pruſſian Subſidy 215—on the Budget 216—on the Abolition of the Slave Trade 216—on a Motion for an Enquiry into the State of the Nation 299, 361—Mr. Halhead's Motion reſpecting Mr. Brothers 361, 362—Motion of Thanks to Admiral Hotham, &c. 361—on the Recall of Earl Fitzwilliam 363, 444—Meſſage from his Majeſty reſpecting the Prince of Wales 364—Motion for a Monument to Captain Faulkner 365—Motion relative to the Conduct of Sir Charles Grey and Sir John Jervis in the Weſt Indies 365—on the Prince of Wales' Eſtabliſhment 446—Motion relative to an additional Allowance made to the Army 446
Pea-crab, Curious Account of the 322
Pekin, Account of 278
Pennſylvania, new Account of 198
Penſhurſt Place, Account of 417
Perjury, once a common Means of Subſiſtence 354. *See* Juries
Perry, John, Eſq. Deſcription of his noble Shipyard and Wet-Dock at Blackwall 385
Perſecution, uſual Effects of 392
Perſian Kings, Luxury of the ancient 352
Peterborough, Lord, Anecdotes of 333
Philadelphia, Fire at 147—Account of 199
Philipſburg, Account of 342
Picture, a curious 343
Pictures, Anecdote of ſome 340
Poig, a River in Carniola, its remarkable Courſe 262
Poland, Reflections on the Fate of 3—natural and artificial Curioſities in 191—Letter from the King of, to the Engliſh Reſident at Warſaw 224
Politeneſs in Converſation, an Indian Anecdote 120
Poplar, Account of 385
Porpeſſe, Natural Hiſtory of the 319
Potatoe Bread, Receipt how to make 168
Potatoes, on the Culture and Uſe of 166
Poverty, Reflections on 101
Poyning, Sir Edward, his Adminiſtration in Ireland 356
Preaching, State of, in the Reign of James I, 178
Prodigality, Abſurdity of 101
Prologue to the Wheel of Fortune 204—to Crotchet Lodge 282—to Life's Vagaries 283—to The Deſerted Daughter 370—to The Secret Tribunal 442
Prophetical Impoſitions 194
Prophets, Account of ſome pretended, in the Reign of Queen Anne 234
Pugh, Mr. the Painter, Anecdote of 258

Q.

Quickſilver Mines of Carniola, Account of the 262

R.

Raſtadt, Deſcription of 340
Raynolds, Dr. John, his Character 178
Razor, a Shell-fiſh, Natural Hiſtory of the 321
Reichenau, Iſland of, deſcribed 164
Reichenau, two curious Bridges at the Town of 162
Retired Life, the Miſeries of a 26
Rheinfelden, Rapidity of the Rhine at 239
Rheinfels, Account of 423
Rheingau, Account of the 345
Rhens, Account of 423
Rhine, picturesque Deſcription of the, from its Sources 161, 238, 340, 421
Richard III, his Merits as a Legiſlator 354
Ring Dove, Food of the 408
Robinſon, John, Account of 178
Rondeau, by Mrs. Radcliffe 207
Rooks, Particulars in the Natural Hiſtory of 407
Rubens, Mr. Anecdote of 184
Ruſſell, Dr. Extract from his Hiſtory of Aleppo 114
Ruſſia, Treaty of Alliance concluded between Great Britain and 450

THE INDEX.

S.

Saint Jago Spaniſh Regiſter Ship, Value of the 145, 228
Salt Mines, wonderful 191
Sand-eel, Account of the 321
Sapor, King of Perſia, his Treatment of the Emperor Valerian 352
Satire, on the Uſe of 413
Schaffhauſen, curious wooden Bridge at 164
Scotland, Anecdotes of the Government of 353
Secret Tribunal, a new Tragedy 449—Prologue to 448
Shakſpeare, ſelect Paſſages from, No. XXV, 34—No. XXVI, 107
Sharks, found near the Iſle of Wight 319
Sharpe, Mr. Samuel, Anecdote of 257
Sheep, many deſtroyed by the Severity of the Weather 452
Sheriffs appointed for 1795, 143, 229
Shore, Sir John, his Character of Sir William Jones 348
Sierra Leone, Advices from 146
Signs, the Hiſtory of 17
Slavery, State of, in England, in former Times 354, 356
Sleep, Reflections on 107
Sloane, Sir Hans, Memoirs of 153
Smith, Mrs. Extract from her Baniſhed Man 179
Smith, John, diſcharged from Priſon 377
Song to Laura 50—a Sailor's 443
Sonnet 52, 207, 443
Sons of the Clergy, Anniverſary Meeting of the 377
Sopra Selva, Valley of 162
Spire, Account of 342
Star Chamber, Court of, erected 356—its dreadful Power 357
Steele, Sir Richard, Anecdotes of 432
Stepney, great Extent and Population of 385
Stone Curlew, on the Migration of the 410
Strange, Sir Robert. *See* Engraving
Straſburg, Account of 243
Superiority, on the Love of 245
Suſſex, Account of 97
Swallows, on the Migration of 412
Swiſs, poetical Character of the 242
Sydney, Algernon, his Character 419
Sydney, Sir Philip, his Character 418

T.

Tales: The Old Sailor 179—The Sultan and the Vizir 315
Taverner, Richard, his Verſion of the Bible 63
Taxes, New, for 1795, 149
Theatres, ancient, whimſical Cuſtom in 97
Theocritus and Geſner, Compariſon between 405
Theology, former State of, in Great Britain 8
Thermometer, greateſt, leaſt, and mean State of, in 1794, 33
Thruſhes, the Uſe in Gardens 407
Tiberius Ceſar, ſingular Trait in his Character 97
Tindall's Tranſlation of the Bible, Character of 10
Tippoo Sultan, his Sons reſtored to him 74
To, humorous Theory of the Propoſition 335
Tottenham High Croſs, Account of 233
Trials: of James Roach, for publiſhing an obſcene Pamphlet 146—of the Earl of Abingdon, for a Libel 146—between Captain Hall and a Sailor 148—in a Caſe of Uſury 149—of an Action for falſe Impriſonment againſt the late Lord Mayor 225—of Lieut. Skill, by a Court Martial 228—Acquittal of Warren Haſtings 307—of a Foreigner, for ſeditious Words 309—of the Rev. William Jackſon, for High Treaſon 371—of Captain Molloy 378—of ſeveral of the Oxfordſhire Militia for Riots and Mutiny 451
Tunſtal, Biſhop, his Zeal againſt Tindall's Bible, the Cauſe of its Succeſs 10
Turenne, Marſhal, his Cruelty 343
Turf, Anecdote of the 258
Turkiſh Ambaſſador, his public Entry 144
Turks, characteriſtic Particulars of the 114

V.

Valerian, the Emperor, his melancholy Fate 352
Vegetation, Remarks on the State of, in January 127—in February 197—in March 275—for April 347—for May 431
Verſes to a frighted Hare 50—Advice to a Parent 51—to a young Lady, to conſole her for an Impediment in her Speech 52—a Latin Tranſlation of the Same 52—to a blighted Roſe 52—on planting ſome Ivy round the Towers of Dudley Caſtle 206—The Caterpillar 206—to a dying Infant 207—The Wiſh 207—for a Medicinal Fountain at the Leaſowes 208—by a Lady, aged

92, on receiving a Piece of Bride Cake 208—on leaving the Country in the Spring 283—Addreſs to Fancy 284—to Summer 369—on the Flight of a Linnet 370
Via Mala, erroneous Accounts of the 161—beautiful Caſcade near it 162
Vices, on the Propagation of, by erroneous Language 158
Viper, Particulars in the Natural Hiſtory of the 318
Virgin Mercury, what 263
Vorſtius, Conrad, perſecuted by James I. 87
Vulgar, Fickleneſs of the 39

W.

Wagtail, Account of that Bird 412
Wales, Prince of, his Marriage 296
Ward, Mr. his uncommon Genius as a Preacher 178
Warner, Rev. Richard, Extract from his Hiſtory of the Iſle of Wight 317
Warwickſhire, Account of 329
Waſhington, his Speech to the American Congreſs 53
Water, Corrupted, Memoir on the Purification of 22—Compoſition of a Water to deſtroy Caterpillars, Ants, &c. 197
Water-cock, a new-invented 121
Water-Doctor, Anecdote of a 36
Weather, extraordinary Change of the 452
Wheel of Fortune, a new Comedy 213—Prologue 204—and Epilogue 205
Wickliff, John, the firſt that tranſlated the whole Bible into Engliſh 10
Wied, Prince of, his excellent Character 425
Wieliſka, wonderful Salt Mines at 191
Wight, Zoology of the Iſle of 317
Wightman, Edward, burnt as a Heretic 88
Wild, Jonathan, ſcelerous Character of 415
Windſor Caſtle, or the Fair Maid of Kent, a ſplendid Drama 284
Wolſey, Cardinal, his Saying of the London Juries 358
Women, Dr. Johnſon's Thoughts on the Education of 332
Worms, City of, deſcribed 343
Wright, Mr. the Painter, Anecdote of 397

Y.

Young, Dr. Comparion between, and Dr. Akenſide 188

Z.

Zenobia, her Behaviour to Aurelian 38
Zoology of the Iſle of Wight 317
Zorinſki, a new Comedy 449

PLATES *in this* VOLUME.

FRONTISPIECE Page
Princeſs of Brunſwick - - 41
Kirkham Abbey - - 81
Map of Suſſex - - - 97
Bramah's Patent Water-cock 121
Head of Sir Hans Sloane - 153
Mr. Henry Browne's Evaporator 185
Bruce Caſtle - - 233
Aarburg on the River Aar - 273
Bampfylde-Moore Carew, King of the Beggars - - 313
Map of Warwickſhire - - 329
Mr. Perry's Shipyard and Wet-Dock at Blackwall - - 385
Penſhurſt Place in Kent - 417

ERRATA.

Page 25, Col. 2, Line 45, *for* diſtinguiſhed *read* extinguiſhed.
379, 1, 10, from the Bottom, *for* Henley *read* Maidenhead.
388, 2, 35, *for* leur *read* leur.
397, 1, 11, *for* Lucretius *read* Lucretias.
422, 1, 23, *for* Reniſh *read* Rheniſh.
423, 1, 9, *for* port *read* part.
424, 2, 21, *for* Beudorf *read* Benderf.